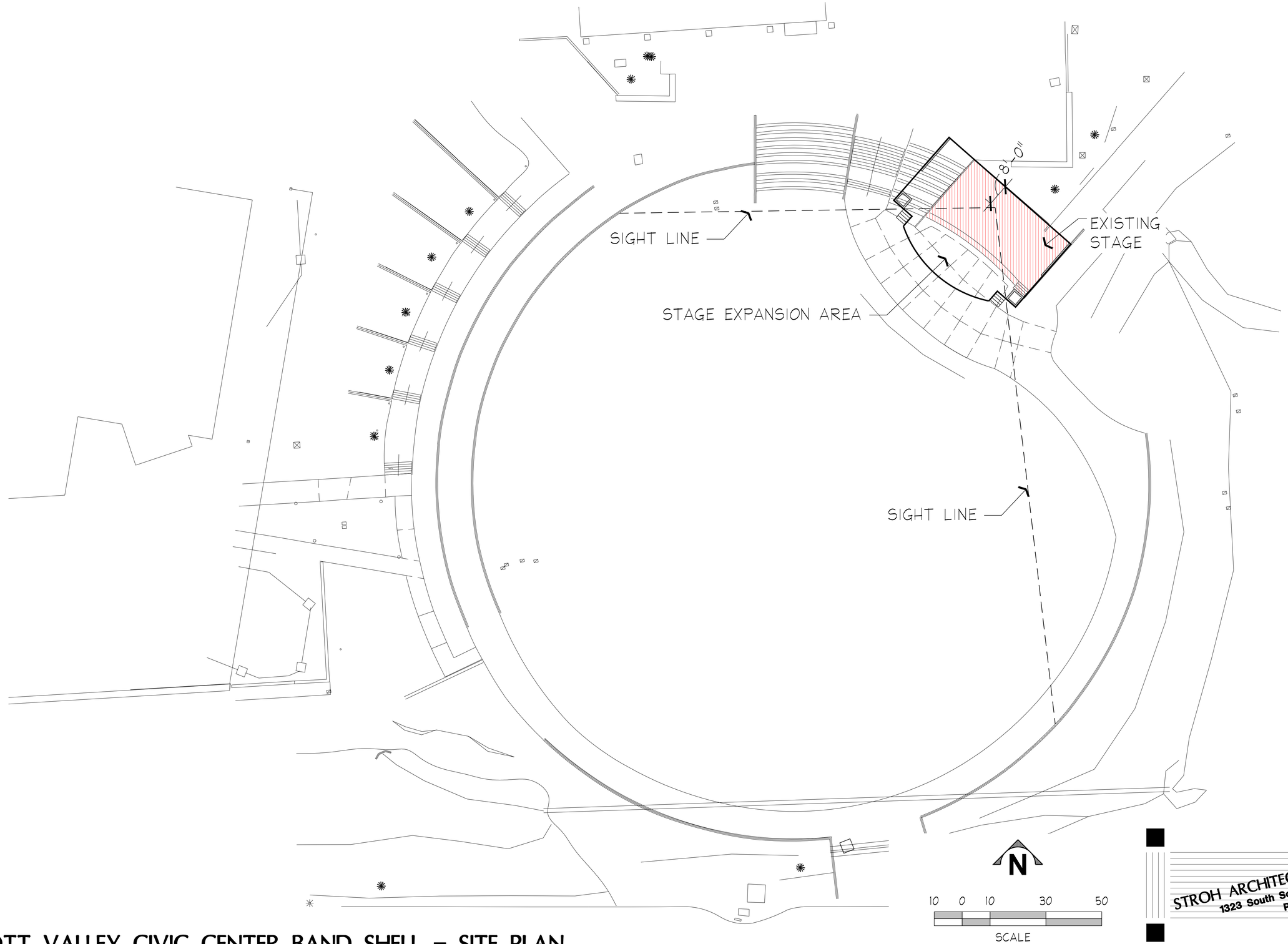

STROH ARCHITECTURE, INC.
1323 South Scenic Heights Drive
Prescott, AZ 86303
(928) 771-0548

PRESCOTT VALLEY CIVIC CENTER BAND SHELL – SITE PLAN

PRESCOTT VALLEY, ARIZONA
FEBRUARY 2013

STROH ARCHITECTURE, INC.
1323 South Scenic Heights Drive
Prescott, AZ 86303
(928) 771-0548

PRESCOTT VALLEY CIVIC CENTER BAND SHELL – SCHEME 1

PRESCOTT VALLEY, ARIZONA
FEBRUARY 2013

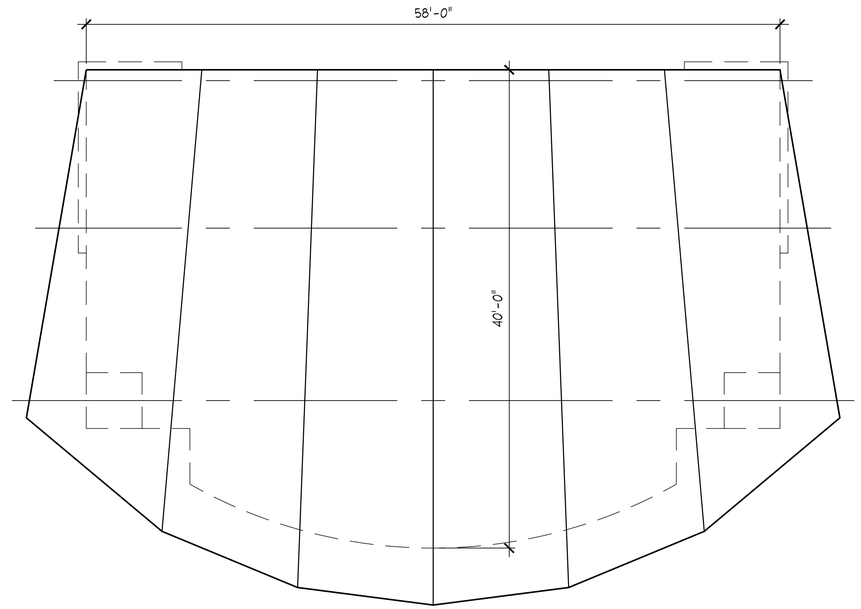

PLAN

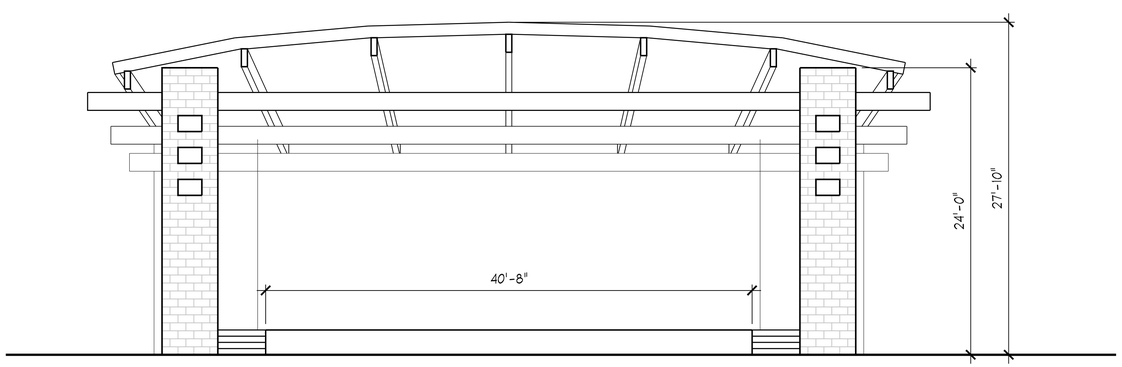

FRONT ELEVATION

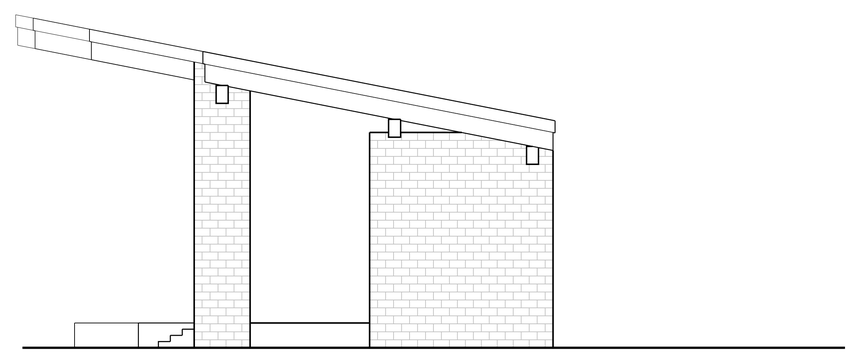

SIDE ELEVATION

STROH ARCHITECTURE, INC.
1323 South Scenic Heights Drive
Prescott, AZ 86303
(928) 771-0548

PRESCOTT VALLEY CIVIC CENTER BAND SHELL – SCHEME 1

PRESCOTT VALLEY, ARIZONA
FEBRUARY 2013

STROH ARCHITECTURE, INC.
1323 South Scenic Heights Drive
Prescott, AZ 86303
(928) 771-0548

PRESCOTT VALLEY CIVIC CENTER BAND SHELL – SCHEME 2

PRESCOTT VALLEY, ARIZONA
FEBRUARY 2013

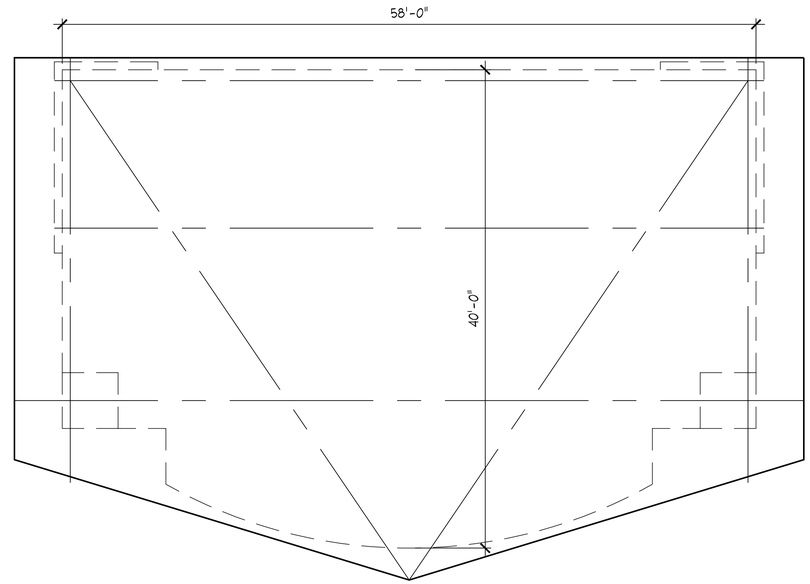

PLAN

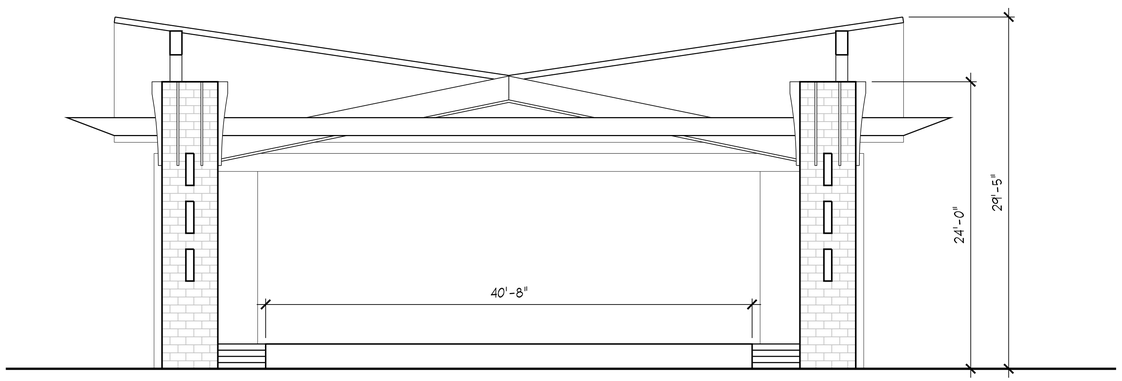

FRONT ELEVATION

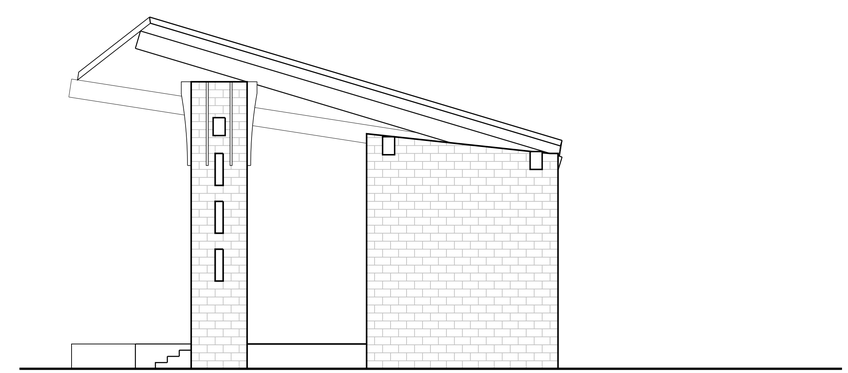

SIDE ELEVATION

STROH ARCHITECTURE, INC.
1323 South Scenic Heights Drive
Prescott, AZ 86303
(928) 771-0548

PRESCOTT VALLEY CIVIC CENTER BAND SHELL – SCHEME 2

PRESCOTT VALLEY, ARIZONA
FEBRUARY 2013

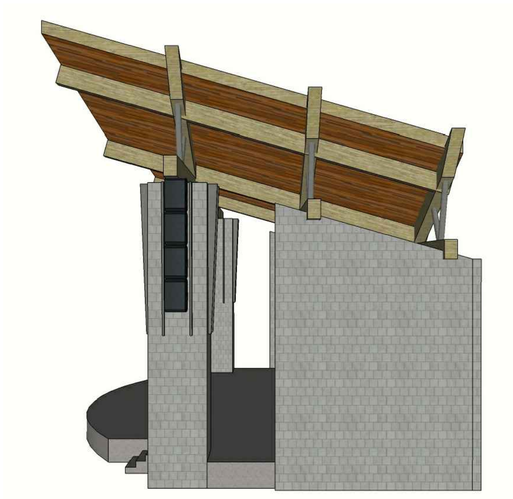

STROH ARCHITECTURE, INC.
1323 South Scenic Heights Drive
Prescott, AZ 86303
(928) 771-0548

PRESCOTT VALLEY CIVIC CENTER BAND SHELL – SCHEME 3

PRESCOTT VALLEY, ARIZONA
FEBRUARY 2013

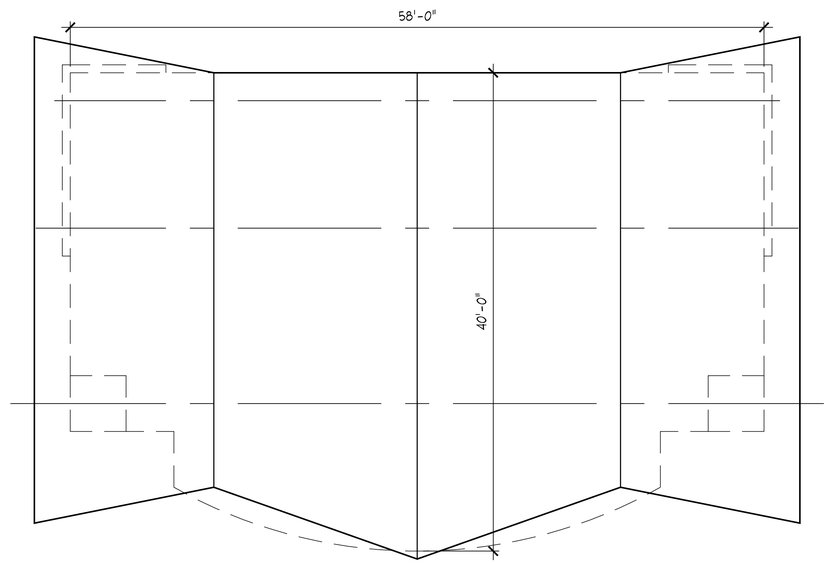

PLAN

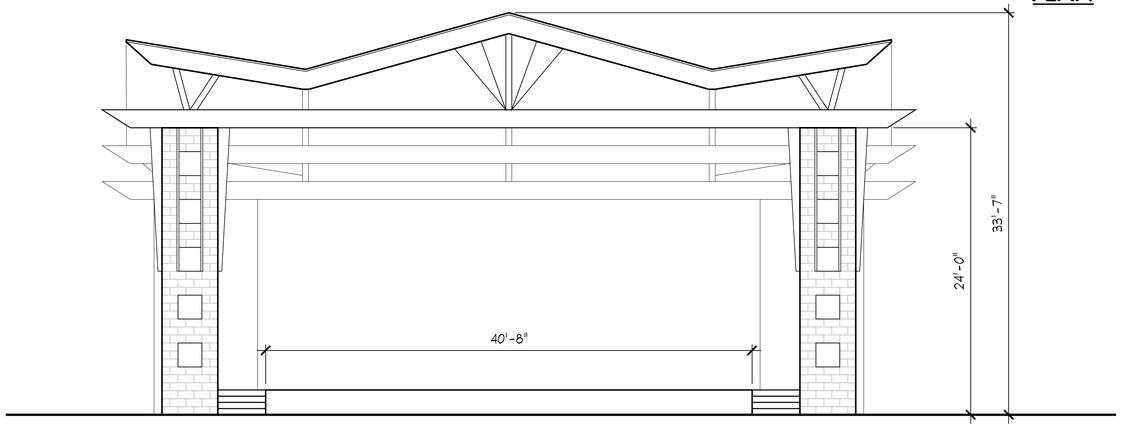

FRONT ELEVATION

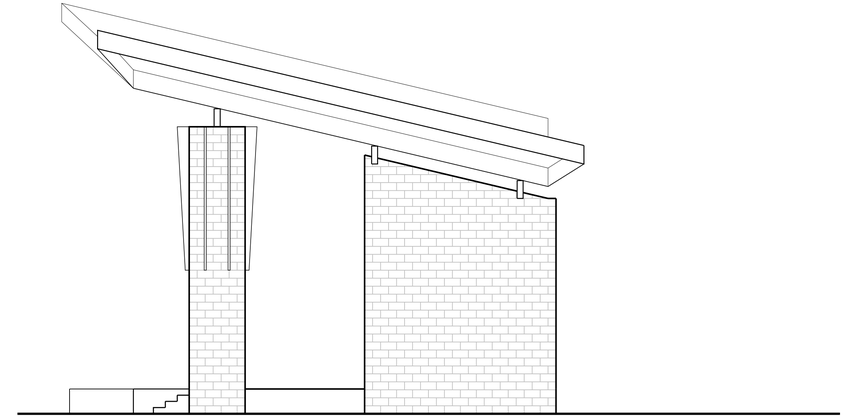

SIDE ELEVATION

STROH ARCHITECTURE, INC.
1323 South Scenic Heights Drive
Prescott, AZ 86303
(928) 771-0548

PRESCOTT VALLEY CIVIC CENTER BAND SHELL – SCHEME 3

PRESCOTT VALLEY, ARIZONA
FEBRUARY 2013