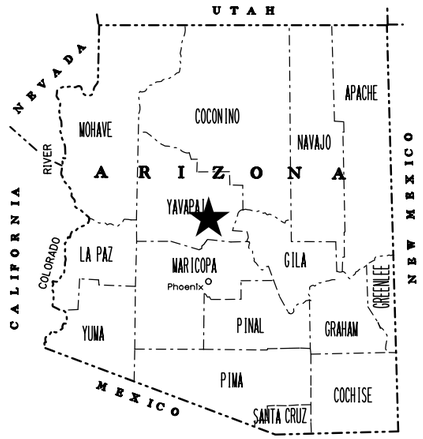

STATE OF ARIZONA
DEPARTMENT OF TRANSPORTATION
INTERMODAL TRANSPORTATION DIVISION

PROJECT PLANS

TOWN OF PRESCOTT VALLEY

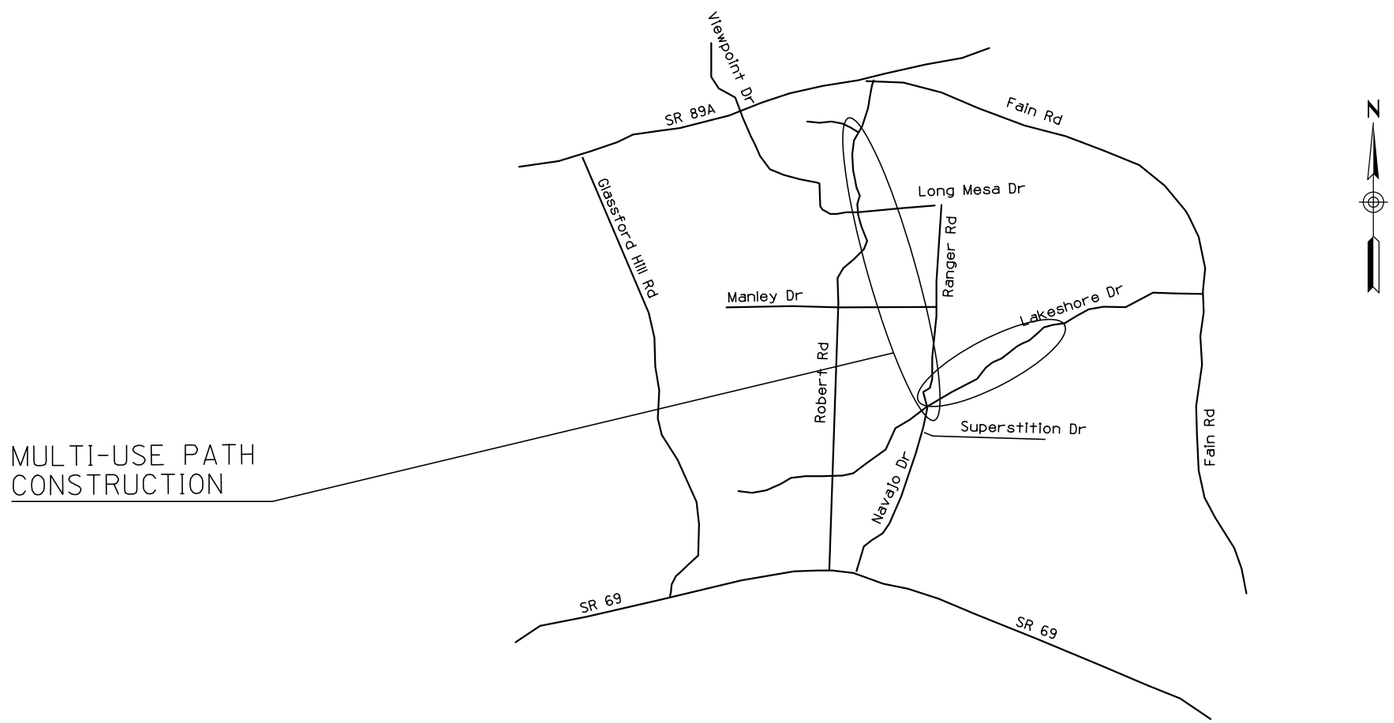

Constructed by:

Construction Company

Completion date

Red-Lines by:

Construction Administrator Name & Company

Completion date

As-Built by:

As-Built Designer Name & Company

Completion date

LAKESHORE DR TO SR 89A, PRESCOTT VALLEY

PROJECT NO. 0000 YV PRV SL680 01C

FEDERAL AID NO. TEA–PRV–0(205)T

ARIZONA DEPARTMENT OF TRANSPORTATION
INTERMODAL TRANSPORTATION DIVISION
JENNIFER TOTH, P.E., STATE ENGINEER

AS BUILT DATA	AS BUILT DATE		1 OF ____

SURVEY NO. | FINISHED PLANS- | REVISIONS- | LOCATION- | DATE-

ADOT STANDARD DRAWINGS
C STANDARDS

ISSUE OR REVISION DATE	STANDARD NO.	SUBJECT
		CONSTRUCTION
5/12	C-01.10 SH 1	SYMBOL LEGEND
5/12	C-01.10 SH 2	SYMBOL LEGEND
5/12	C-01.10 SH 3	SYMBOL LEGEND
5/12	C-01.10 SH 4	SYMBOL LEGEND
5/12	C-01.30 SH 1	GENERAL ABBREVIATIONS
5/12	C-01.30 SH 2	GENERAL ABBREVIATIONS
5/12	C-01.30 SH 3	GENERAL ABBREVIATIONS
5/12	C-02.10	SLOPES, RURAL DIVIDED HIGHWAYS
5/12	C-02.20	SLOPES, RURAL UNDIVIDED AND FRINGE-URBAN HIGHWAYS
5/12	C-02.30	SLOPES, MISCELLANEOUS ROADWAYS
5/12	C-03.10 SH 1	DITCHES, CHANNELS, DIKES AND BERMS, DITCHES AND CHANNELS
5/12	C-03.10 SH 2	DITCHES, CHANNELS, DIKES AND BERMS, DIKES
5/12	C-03.10 SH 3	DITCHES, CHANNELS, DIKES AND BERMS, DITCH DIKE
5/12	C-03.10 SH 4	DITCHES, CHANNELS, DIKES AND BERMS, PIPE BERMS
5/12	C-03.10 SH 5	DITCHES, CHANNELS, DIKES AND BERMS, HEADWALL BERMS
5/12	C-04.10 SH 1	SPILLWAY, EMBANKMENT SINGLE INLET
5/12	C-04.10 SH 2	SPILLWAY, EMBANKMENT DOUBLE INLET
5/12	C-04.20 SH 1	DOWNDRAIN, EMBANKMENT SINGLE INLET
5/12	C-04.20 SH 2	DOWNDRAIN, EMBANKMENT DOUBLE INLET
5/12	C-04.30	SPILLWAY LENGTH TABLE
5/12	C-04.40	DOWNDRAIN LENGTH TABLE
5/12	C-04.50	DOWNDRAIN ENERGY DISSIPATOR
5/12	C-05.10	CURB & GUTTER, CURB, GUTTER
5/12	C-05.12 SH 1	CURB & GUTTER TRANSITIONS
5/12	C-05.12 SH 2	CURB & GUTTER TRANSITIONS
5/12	C-05.12 SH 3	CURB AND GUTTER TRANSITIONS
5/12	C-05.20 SH 1	CONCRETE DRIVEWAYS & SIDEWALKS, DRIVEWAYS
5/12	C-05.20 SH 2	CONCRETE DRIVEWAYS & SIDEWALKS, SIDEWALKS
5/12	C-05.30 SH 1	SIDEWALK RAMP, TYPE A
5/12	C-05.30 SH 2	SIDEWALK RAMP, TYPE B
5/12	C-05.30 SH 3	SIDEWALK RAMP, TYPE C
5/12	C-05.30 SH 4	SIDEWALK RAMP, TYPE D
5/12	C-05.30 SH 5	SIDEWALK RAMP, TYPE E
5/12	C-05.30 SH 6	SIDEWALK RAMP, TYPE F
5/12	C-05.30 SH 7	SIDEWALK RAMP, DETECTABLE WARNING STRIP
5/12	C-05.40	MEDIAN PAVING AND NOSE TAPER
5/12	C-05.50	CONCRETE BUS BAY
5/12	C-06.10 SH 1	DRIVEWAY & TURNOUT LAYOUTS
5/12	C-06.10 SH 2	DRIVEWAY & TURNOUT LAYOUTS
5/12	C-07.01 SH 1	PCCP JOINTS
5/12	C-07.01 SH 2	PCCP JOINTS
5/12	C-07.02	LOAD TRANSFER DOWEL ASSEMBLY
5/12	C-07.03 SH 1	PCCP JOINT LOCATIONS, MAINLINE SKEWED JOINTS
5/12	C-07.03 SH 2	PCCP JOINT LOCATIONS, MAINLINE SKEWED JOINTS
5/12	C-07.03 SH 3	PCCP JOINT LOCATIONS, MAINLINE SKEWED JOINTS
5/12	C-07.03 SH 4	PCCP JOINT LOCATIONS, MAINLINE SKEWED JOINTS
5/12	C-07.03 SH 5	PCCP JOINT LOCATIONS, MAINLINE NON-SKEWED JOINTS
5/12	C-07.03 SH 6	PCCP JOINT LOCATIONS, MAINLINE NON-SKEWED JOINTS
5/12	C-07.03 SH 7	PCCP JOINT LOCATIONS, MAINLINE NON-SKEWED JOINTS
5/12	C-07.03 SH 8	PCCP JOINT LOCATIONS, MAINLINE NON-SKEWED JOINTS
5/12	C-07.04 SH 1	PCCP JOINT LOCATIONS, PARALLEL TYPE ENTRANCE RAMP WITH AUXILIARY LANE
5/12	C-07.04 SH 2	PCCP JOINT LOCATIONS, PARALLEL TYPE EXIT RAMP WITH AUXILIARY LANE
5/12	C-07.04 SH 3	PCCP JOINT LOCATIONS, TAPER TYPE ENTRANCE RAMP
5/12	C-07.04 SH 4	PCCP JOINT LOCATIONS, TAPER TYPE EXIT RAMP
5/12	C-07.04 SH 5	PCCP JOINT LOCATIONS, CROSSROAD AND RAMP TERMINI
5/12	C-07.06	TRENCH BACKFILL AND PAVEMENT REPLACEMENT
5/12	C-08.20	PAVED GORE AREA
5/12	C-10.00	GUARDRAIL MEASUREMENT LIMITS
5/12	C-10.01	GUARDRAIL INSTALLATION, TYPE A AND REFLECTOR TAB
5/12	C-10.02	GUARDRAIL INSTALLATION, TYPE B AND REFLECTOR TAB
5/12	C-10.03	W-BEAM GUARDRAIL, G4(1W) AND G4(2W), BLOCKED-OUT TIMBER POST
5/12	C-10.04	W-BEAM GUARDRAIL, G4(1S), BLOCKED-OUT STEEL POST
5/12	C-10.05 SH 1	W-BEAM GUARDRAIL, G4(MODIFIED) WITH FREEWAY CURB AND GUTTER
5/12	C-10.05 SH 2	W-BEAM GUARDRAIL, G4(MODIFIED) WITH FREEWAY CURB AND GUTTER
5/12	C-10.06 SH 1	W-BEAM GUARDRAIL, NESTED, TYPES 1 AND 2
5/12	C-10.06 SH 2	W-BEAM GUARDRAIL, NESTED, TYPE 3
5/12	C-10.07 SH 1	W-BEAM GUARDRAIL, BOLTED ANCHOR
5/12	C-10.07 SH 2	W-BEAM GUARDRAIL, BOLTED ANCHOR
5/12	C-10.08	W-BEAM GUARDRAIL, END ANCHOR
5/12	C-10.20	THRIE-BEAM GUARDRAIL, G9, BLOCKED-OUT STEEL POST
5/12	C-10.30 SH 1	GUARDRAIL TRANSITION, THRIE BEAM TO CONCRETE HALF BARRIER, 32" TYPE 'F'
5/12	C-10.30 SH 2	GUARDRAIL TRANSITION, THRIE BEAM TO CONCRETE HALF BARRIER, 32" TYPE 'F'
5/12	C-10.40	CONCRETE MEDIAN BARRIER, 32" TYPE 'F', CAST-IN-PLACE
5/12	C-10.41	CONCRETE MEDIAN BARRIER, 42" TYPE 'F', CAST-IN-PLACE
5/12	C-10.42 SH 1	GLARE SCREEN, CONCRETE MEDIAN BARRIER
5/12	C-10.42 SH 2	GLARE SCREEN, CONCRETE MEDIAN BARRIER
5/12	C-10.42 SH 3	GLARE SCREEN, CONCRETE MEDIAN BARRIER
5/12	C-10.50 SH 1	CONCRETE HALF BARRIER, 32" TYPE 'F', CAST-IN-PLACE
5/12	C-10.50 SH 2	CONCRETE HALF BARRIER, 32" TYPE 'F', PRECAST
5/12	C-10.51	CONCRETE HALF BARRIER, 32" TYPE 'F' WITH SIDEWALK
5/12	C-10.52	CONCRETE HALF BARRIER, 32" TYPE 'F' WITH GUTTER
5/12	C-10.53	CONCRETE HALF BARRIER, 42" TYPE 'F' WITH GUTTER
5/12	C-10.54 SH 1	CONCRETE HALF BARRIER, 32" TYPE 'F' AT PIERS, CAST-IN-PLACE
5/12	C-10.54 SH 2	CONCRETE HALF BARRIER, 32" TYPE 'F' AT PIERS, PRECAST
5/12	C-10.54 SH 3	CONCRETE HALF BARRIER, 32" TYPE 'F' AT PIERS, LAYOUT
5/12	C-10.55 SH 1	CONCRETE HALF BARRIER, 42" TYPE 'F' AT PIERS, CAST-IN-PLACE
5/12	C-10.55 SH 2	CONCRETE HALF BARRIER, 42" TYPE 'F' AT PIERS, PRECAST
5/12	C-10.55 SH 3	CONCRETE HALF BARRIER, 42" TYPE 'F' AT PIERS, LAYOUT
5/12	C-10.70 SH 1	CONCRETE HALF-BARRIER TRANSITION TO VERTICAL, 32" TYPE 'F' WITH CAISSONS
5/12	C-10.70 SH 2	CONCRETE HALF-BARRIER TRANSITION TO VERTICAL, 32" TYPE 'F' WITH CAISSONS
5/12	C-10.70 SH 3	CONCRETE HALF-BARRIER TRANSITION TO VERTICAL, 32" TYPE 'F' WITH CAISSONS
5/12	C-10.71 SH 1	CONCRETE HALF-BARRIER TRANSITION TO VERTICAL, 32" TYPE 'F' WITH CURB & GUTTER
5/12	C-10.71 SH 2	CONCRETE HALF-BARRIER TRANSITION TO VERTICAL, 32" TYPE 'F' WITH CURB & GUTTER
5/12	C-10.72 SH 1	CONCRETE HALF-BARRIER TRANSITION TO VERTICAL, 42" TO 32" TYPE 'F' WITH CAISSONS
5/12	C-10.72 SH 2	CONCRETE HALF-BARRIER TRANSITION TO VERTICAL, 42" TO 32" TYPE 'F' WITH CAISSONS
5/12	C-10.72 SH 3	CONCRETE HALF-BARRIER TRANSITION TO VERTICAL, 42" TO 32" TYPE 'F' WITH CAISSONS
5/12	C-10.73 SH 1	CONCRETE HALF-BARRIER TRANSITION TO VERTICAL, 42" TO 32" TYPE 'F' WITH GUTTER
5/12	C-10.73 SH 2	CONCRETE HALF-BARRIER TRANSITION TO VERTICAL, 42" TO 32" TYPE 'F' WITH GUTTER
5/12	C-10.74	CONCRETE HALF-BARRIER TRANSITION, 42" TO 32" TYPE 'F'
5/12	C-10.75 SH 1	CONCRETE HALF-BARRIER TRANSITION, TYPE 'F', TANGENT DEPARTURE TYPE 1
5/12	C-10.75 SH 2	CONCRETE HALF-BARRIER TRANSITION, TYPE 'F', TANGENT DEPARTURE TYPE 2
5/12	C-10.76	CONCRETE HALF-BARRIER TRANSITION, TYPE 'F' AT RADIUS, 32" TO 0"
5/12	C-10.77	CONCRETE HALF-BARRIER TRANSITION, END TERMINAL CURB AND GUTTER
5/12	C-11.10 SH 1	ROADWAY CATTLE GUARD
5/12	C-11.10 SH 2	ROADWAY CATTLE GUARD
5/12	C-11.10 SH 3	ROADWAY CATTLE GUARD
5/12	C-11.10 SH 4	ROADWAY CATTLE GUARD
5/12	C-11.20	CATTLE GUARD, DRAINAGE
5/12	C-12.10 SH 1	FENCE, WOVEN WIRE
5/12	C-12.10 SH 2	FENCE, BARBED WIRE
5/12	C-12.10 SH 3	FENCE, TYPES 1 AND 2 GATES, FLOOD GATE
5/12	C-12.10 SH 4	FENCE, FLOOD GATE INSTALLATION
5/12	C-12.10 SH 5	FENCE, MISCELLANEOUS DETAILS
5/12	C-12.20 SH 1	FENCE, CHAIN LINK, TYPE 1
5/12	C-12.20 SH 2	FENCE, CHAIN LINK, TYPE 2
5/12	C-12.20 SH 3	FENCE, CHAIN LINK, GATES
5/12	C-12.30 SH 1	FENCE, CHAIN LINK CABLE BARRIER
5/12	C-12.30 SH 2	FENCE, CHAIN LINK CABLE BARRIER
5/12	C-12.30 SH 3	FENCE, CHAIN LINK CABLE BARRIER
5/12	C-13.10 SH 1	PIPE CULVERT INSTALLATION
5/12	C-13.10 SH 2	PIPE CULVERT INSTALLATION
5/12	C-13.15	TYPICAL PIPE INSTALLATION
5/12	C-13.20	PIPE, REINFORCED CONCRETE END SECTION
5/12	C-13.25	PIPE, CORRUGATED METAL END SECTION
5/12	C-13.30	PIPE AND PIPE ARCH, CORRUGATED METAL, CONCRETE INVERT PAVING
5/12	C-13.55	PIPE, CATTLE-VEHICLE PASS, MITERED END TREATMENT
5/12	C-13.60	SLOTTED DRAIN DETAILS
5/12	C-13.65	SLOTTED DRAIN INSTALLATION DETAILS
5/12	C-13.70	STORM DRAIN CONNECTION DETAILS
5/12	C-13.75	STORM DRAIN OUTLET BARRIER GATE
5/12	C-13.76	STORM DRAIN OUTLET AND STORM DRAIN PLUG
5/12	C-13.80	PIPE COLLAR DETAILS
5/12	C-15.10	CATCH BASIN, TYPE 1
5/12	C-15.20 SH 1	CATCH BASIN, TYPE 3
5/12	C-15.20 SH 2	CATCH BASIN, TYPE 3
5/12	C-15.20 SH 3	CATCH BASIN, ACCESS FRAME AND COVER DETAILS
5/12	C-15.30	CATCH BASIN, TYPE 4
5/12	C-15.40 SH 1	CATCH BASIN, TYPE 5
5/12	C-15.40 SH 2	CATCH BASIN, TYPE 5
5/12	C-15.50	CATCH BASIN, FRAME AND GRATE
5/12	C-15.70 SH 1	CATCH BASIN, MISCELLANEOUS DETAILS
5/12	C-15.70 SH 2	CATCH BASIN, MISCELLANEOUS DETAILS
5/12	C-15.75	CATCH BASIN, DROP INLET
5/12	C-15.80	CATCH BASIN, FLUSH
5/12	C-15.81	CATCH BASIN, SIDE SLOPE
5/12	C-15.90	CATCH BASIN, MEDIAN DIKE, PRECAST
5/12	C-15.91 SH 1	FREEWAY CATCH BASIN DETAILS
5/12	C-15.91 SH 2	FREEWAY CATCH BASIN DETAILS
5/12	C-15.92 SH 1	CATCH BASIN WITH TYPE 'F' CONCRETE HALF BARRIER
5/12	C-15.92 SH 2	CATCH BASIN WITH TYPE 'F' CONCRETE HALF BARRIER
5/12	C-16.40	IRRIGATION SLEEVES
5/12	C-17.10	RAIL BANK PROTECTION FOR DRAINAGEWAYS, TYPES 1, 2 & 3
5/12	C-17.15	RAIL BANK PROTECTION AT ABUTMENTS, TYPES 4, 5 & 6
5/12	C-17.20	BANK PROTECTION FOR DRAINAGEWAYS, TYPES 7, 8 & 9
5/12	C-18.10 SH 1	MANHOLE, RISER DETAILS
5/12	C-18.10 SH 2	MANHOLE, BASE DETAILS, NORMAL INSTALLATION
5/12	C-18.10 SH 3	MANHOLE, FRAME AND COVER DETAILS
5/12	C-19.10 SH 1	FORD, CONCRETE WALLS
5/12	C-19.10 SH 2	FORD, TYPES 1 AND 2
5/12	C-21.10	SURVEY MONUMENT FRAME AND COVER
5/12	C-21.20	SURVEY MARKER

REV.: 05/12

ADOT STANDARD DRAWINGS REVISION DATES and STANDARD NO.'s REVIEW		
	NAME	DATE
CONSTRUCTION Standards		
PROJECT NO. PRV 0000 YV SL680 01C	1A OF	
AS BUILT DATA / FEDERAL AID NO. TEA-PRV-0(205)T	AS BUILT DATE	OF

ADOT STANDARD DRAWINGS

TRAFFIC SIGNING & MARKING STANDARDS
EFFECTIVE AUGUST 2011

REVISION	STANDARD	SUBJECT: SIGNING & MARKING DETAILS
2/02	M-1	CURB MARKINGS FOR RAISED MEDIAN & ISLANDS
2/04	M-2 SHT 1	INTERSECTION STRIPING
2/02	M-2 SHT 2	INTERSECTION STRIPING
2/02	M-2 SHT 3	CENTERLINE & REVERSE CURVE DETAILS
2/02	M-3	STRIPING AND DELINEATION FOR FREEWAY TERMINALS
10/10	M-4	PASSING LANE STRIPING DETAILS
2/02	M-5	RAILROAD PAVEMENT MARKINGS
2/02	M-6	WORD MARKINGS
2/02	M-7	PAVEMENT LETTERS
2/02	M-8	PAVEMENT LETTERS
2/02	M-9	PAVEMENT NUMBERS
9/08	M-10 SHT 1	PAVEMENT MARKING SYMBOLS
9/08	M-10 SHT 2	PAVEMENT MARKING SYMBOLS
9/08	M-10 SHT 3	PAVEMENT MARKING SYMBOLS
3/05	M-11	TURN LANE PAVEMENT MARKINGS
10/10	M-12	FREEWAY PAVEMENT ARROWS
2/02	M-13	PREFERENTIAL LANE PAVEMENT MARKINGS
1/10	M-14	STRIPING AND DELINEATION FOR TRUCK ESCAPE RAMPS
1/10	M-15 SHT 1	PAVEMENT MARKING FOR FREEWAY ENTRANCE RAMP - TAPERED ACCELERATION LANE
1/10	M-15 SHT 2	PAVEMENT MARKING FOR FREEWAY ENTRANCE RAMP - PARALLEL ACCELERATION LANE
10/10	M-15 SHT 3	PAVEMENT MARKING FOR FREEWAY ENTRANCE RAMP - PARALLEL ACCELERATION LANE WITH HOV BYPASS
1/10	M-16 SHT 1	PAVEMENT MARKING FOR FREEWAY EXIT RAMPS - TAPERED DECELERATION LANE
1/10	M-16 SHT 2	PAVEMENT MARKING FOR FREEWAY EXIT RAMP - PARALLEL DECELERATION LANE
1/10	M-17	FREEWAY LANE DROP PAVEMENT MARKINGS
6/08	M-18	RECESSED PAVEMENT MARKER DETAILS
6/08	M-19 SHT 1	RAISED PAVEMENT MARKER PLAN LEGEND
6/08	M-19 SHT 2	NON-REFLECTIVE RAISED PAVEMENT MARKER DETAILS
6/08	M-19 SHT 3	RETRO-REFLECTIVE RAISED PAVEMENT MARKER DETAILS
6/08	M-19 SHT 4	RETRO-REFLECTIVE RAISED PAVEMENT MARKER DETAILS
6/08	M-19 SHT 5	PAVEMENT MARKING DETAILS FOR UNDIVIDED HIGHWAYS
6/08	M-19 SHT 6	SERIES 40 RETRO-REFLECTIVE RAISED PAVEMENT MARKERS (RRPM) FOR UNDIVIDED HIGHWAYS
6/08	M-19 SHT 7	SERIES 80 RETRO-REFLECTIVE RAISED PAVEMENT MARKERS (RRPM) FOR UNDIVIDED HIGHWAYS
6/08	M-19 SHT 8	TYPICAL MARKING DETAILS FOR EDGELINE PAVEMENT MARKERS
6/08	M-19 SHT 9	TYPICAL MARKING DETAILS FOR LANE DROP & INTERSECTION GUIDE STRIPING
6/08	M-19 SHT 10	PAVEMENT MARKING CROSS-SECTION DETAILS FOR HIGHWAYS
2/02	M-20 SHTS 1 & 2	CHIP SEAL MARKER USAGE FOR TEMPORARY MARKERS
10/10	M-21	TRANSVERSE RUMBLE STRIP DETAILS
9/08	M-22 SHT 1	CONTINUOUS LONGITUDINAL RUMBLE STRIP GROOVE, PATTERN & LOCATION DETAILS
9/08	M-22 SHT 2	LONGITUDINAL RUMBLE STRIP EXCEPTION DETAILS
12/08	M-23 SHTS 1 & 2	OBJECT MARKER DETAILS
5/03	M-24	OBJECT MARKER PLACEMENT DETAILS
8/11	M-26 SHT 1	DELINEATOR PLACEMENT AND SPACING
8/11	M-26 SHT 2	DELINEATOR PLACEMENT AND SPACING
10/10	M-27	DELINEATION DETAILS FOR MEDIAN CROSSOVERS
2/02	M-28	CURVE TREATMENT - CHEVRONS
9/06	M-29	OFF-MAINLINE REFERENCE MARKER LOCATION DETAIL
11/04	M-30	OFF-MAINLINE REFERENCE MARKER DETAILS
2/04	M-31	SNOW MARKER DETAILS
5/03	M-32	BRIDGE AND BARRIER MARKER DETAILS
5/03	M-33	BRIDGE & BARRIER MARKER PLACEMENT & INSTALLATION DETAILS
4/05	M-34	GUARDRAIL EXTRUDER TERMINAL DELINEATION DETAILS
2/02	M-35	OBJECT MARKER FOR SAND BARREL CRASH CUSHION
8/11	M-36	FLEXIBLE DELINEATOR ASSEMBLIES

REVISION	STANDARD	SUBJECT: SIGNING & MARKING DETAILS
8/11	M-37	DELINEATORS IN-GROUND FOUNDATION DETAILS
1/10	M-38	SQUARE STEEL POST BREAK-AWAY DELINEATOR
8/04	S-1 SHT 1	SQUARE TUBE SIGN POST SELECTION CHARTS
5/06	S-1 SHT 2	PERFORATED SIGN POST FOUNDATION
5/03	S-1 SHT 3	PERFORATED SIGN POST FOUNDATION
10/10	S-2 SHT 1	S&W SHAPE POST SELECTION CHART (BREAKAWAY SIGN POST DESIGN)
10/10	S-2 SHT 2	S&W SHAPE POST SELECTION CHART (SPECIAL WIND REGIONS) (BREAKAWAY SIGN POST DESIGN)
10/10	S-3 SHT 1	OFFSETS, CLEARANCES, & MOUNTING DETAILS FOR GUIDE SIGNS & BREAKAWAY POST INSTALLATION
10/10	S-3 SHT 2	OFFSETS, CLEARANCES, & MOUNTING DETAILS FOR WARNING, REGULATORY & MARKER SIGN ON FREEWAYS
1/10	S-3 SHT 3	OFFSETS, CLEARANCES, & MOUNTING DETAILS FOR SIGNS ON NON-FREEWAYS RAMPS AND CROSSROADS
1/10	S-3 SHT 4	OFFSETS, CLEARANCES, & MOUNTING DETAILS FOR SQUARE TUBE POSTS
10/10	S-4	W SHAPE TENSION FUSE PLATE AND HINGE DETAILS
8/11	S-5	BREAKAWAY POST DETAILS FOR W SHAPE GUIDE SIGNS
8/11	S-6	BREAKAWAY POST DETAILS S4×7.7
6/06	S-7	AUXILIARY SIGN INSTALLATION DETAILS
8/06	S-8 SHT 1	ALUMINUM EXTRUSION SIGN PANEL DETAILS
8/11	S-8 SHT 2	ALUMINUM EXTRUSION EXIT PANEL DETAIL
8/06	S-8 SHT 3	ALUMINUM EXTRUSION PANEL INSTALLATION DETAIL ON BREAKAWAY POSTS
8/06	S-8 SHT 4	ALUMINUM EXTRUSION SIGN INSTALLATION DETAIL TO PERFORATED POSTS
2/02	S-9 SHTS 1, 2 & 3	SIGN INSTALLATION ON POLE
5/04	S-10 SHT 1	FREEWAY MILEPOST DETAILS
5/04	S-10 SHT 2	NON-FREEWAY MILEPOST DETAILS
7/04	S-11 SHT 1	TAPERED TUBE SIGN STRUCTURE
7/04	S-11 SHT 2	TAPERED TUBE SIGN STRUCTURE
7/04	S-11 SHT 3	TAPERED TUBE SIGN STRUCTURE
7/04	S-11 SHT 4	TAPERED TUBE SIGN STRUCTURE
2/08	S-12 SHT 1	ARROWS FOR USE ON FREEWAY MAINLINE AND OVERHEAD GUIDE SIGNS
2/08	S-12 SHT 2	ARROWS FOR USE ON GROUND MOUNT GUIDE SIGNS ON CONVENTIONAL ROADWAYS, RAMPS, AND CROSSROADS
2/08	S-13	SIGN IDENTIFICATION DETAILS
4/06	S-14 SHT 1	INSTALLATION OF ROTATING OPEN/CLOSED SIGN
4/06	S-14 SHT 2	INSTALLATION OF ROTATING OPEN/CLOSED SIGN
4/06	S-14 SHT 3	INSTALLATION OF ROTATING OPEN/CLOSED SIGN
4/07	S-15 SHT 1	DUDLEY FOLDING SIGN
4/07	S-15 SHT 2	DUDLEY FOLDING SIGN
2/02	C-1	SAND BARREL CRASH CUSHION
2/02	C-2	SAND BARREL CRASH CUSHION TYPICAL INSTALLATION
12/06	C-3 SHT 1	PRECAST CONCRETE BARRIER PIN AND LOOP ASSEMBLY NCHRP 350 APPROVED DESIGN
12/06	C-3 SHT 2	PRECAST CONCRETE BARRIER PIN AND LOOP ASSEMBLY NCHRP 350 APPROVED DESIGN
2/02	C-4 SHT 1	MEDIAN CROSSOVER
2/02	C-4 SHT 2	TYPICAL END TREATMENTS FOR DETOURS USING TEMPORARY CONCRETE BARRIER (TCB)
10/02	C-5 SHT 1	APPROACH PLATE AND TRANSITION SECTION FOR TEMPORARY CONCRETE BARRIER
10/02	C-5 SHT 2	APPROACH PLATE AND TRANSITION SECTION FOR TEMPORARY CONCRETE BARRIER

NO.	DESCRIPTION OF REVISION	MADE BY	DATE
1	REMOVED M-25, REVISED M-4, M-26, M-35 SHT 1, M-10, M-19, S-9 ADDED SHT 2, S-3 SHT 1 ADD SHT 2, S-4, S-5, S-6	L. LOPEZ	10/10
2	REVISED M-26, SHT 1 & SHT 2, REVISED M-35, M-37, S-4, S-5, S-6, S-8 SHT 2.	L. LOPEZ	8/11

ADOT STANDARD DRAWINGS
REVISION DATES and STANDARD NO.'s REVIEW

	NAME	DATE
SIGNING & MARKING STANDARDS		

PROJECT NO. PRV 0000 YV SL680 01C — 1B OF

AS BUILT DATA — FEDERAL AID NO. TEA-PRV-0(205)T — AS BUILT DATE — OF

ADOT STANDARD DRAWINGS

TRAFFIC SIGNAL AND LIGHTING STANDARDS
(SHEET 1 OF 2)
EFFECTIVE JANUARY 2012

REVISION DATE	STANDARD NUMBER		SUBJECT: TRAFFIC SIGNALS AND LIGHTING DETAILS
	T.S. 0		**ABBREVIATIONS, SYMBOLS AND DEFINITIONS**
03/10	0-1		STANDARD ABBREVIATIONS
03/10	0-2	SHT 1	PLAN SYMBOLS
03/10	0-2	SHT 2	PLAN SYMBOLS
03/10	0-2	SHT 3	PLAN SYMBOLS
03/10	0-3	SHT 1	STANDARD DEFINITIONS
03/10	0-3	SHT 2	STANDARD DEFINITIONS
03/10	0-4		REFERENCE DOCUMENTS AND GENERAL REQUIREMENTS
	T.S. 1		**PULL BOXES**
09/11	1-1	SHT 1	LIGHT DUTY - LIGHT WEIGHT NO. 5 AND NO. 7 PULL BOX
09/11	1-1	SHT 2	LIGHT DUTY - LIGHT WEIGHT NO. 5 AND NO. 7 SLOPE WALL BODY PULL BOX DETAILS
09/11	1-2		HEAVY DUTY NO. 5 AND NO. 7 STRAIGHT BODY WALL PULL BOX DETAILS
09/11	1-3		REPLACEMENT LID SIZING FOR EXISTING NO. 5 AND NO. 7 PULL BOXES
09/11	1-4	SHT 1	TYPICAL PULL BOX INSTALLATION AND WIRING DETAILS
09/11	1-4	SHT 2	TYPICAL PULL BOX INSTALLATION AND WIRING DETAILS
09/11	1-4	SHT 3	TYPICAL PULL BOX INSTALLATION DETAILS
09/11	1-5	SHT 1	ELECTRICAL CONDUIT COVER AND TRENCH REQUIREMENTS
09/11	1-5	SHT 2	CONDUIT EXPANSION COUPLINGS
09/11	1-6		CONDUCTOR REQUIREMENTS
03/10	1-7		TRAFFIC SIGNAL IMSA CABLE COLOR CODES
09/11	1-8	SHT 1	FRONT OF BARRIER JUNCTION BOX
09/11	1-8	SHT 2	BACK OF BARRIER JUNCTION BOX
09/11	1-9		TOP OF BARRIER JUNCTION BOX DETAILS
09/11	1-10		TOP OF BARRIER JUNCTION BOX DETAILS
09/11	1-11	SHT 1	HEAVY DUTY LIGHTING NO. 4 AND NO. 6 PULL BOX
09/11	1-11	SHT 2	HEAVY DUTY LIGHTING NO. 4 AND NO. 6 PULL BOX
09/11	1-11	SHT 3	HEAVY DUTY LIGHTING NO. 4 AND NO. 6 PULL BOX LID
09/11	1-11	SHT 4	HEAVY DUTY LIGHTING NO. 4 AND NO. 6 PULL BOX LID
	T.S. 2		**FOUNDATIONS**
03/10	2-1		FOUNDATION FOR TYPE II LOAD CENTER CABINET
03/10	2-2		FOUNDATION FOR TYPE IV LOAD CENTER CABINET
03/10	2-3		FOUNDATION FOR TYPE III CONTROL CABINET
03/10	2-4		FOUNDATION FOR TYPE IV AND V CONTROL CABINETS
03/10	2-5		FOUNDATION FOR TYPE 340 CONTROL CABINET
03/10	2-6		METER PEDESTAL CABINET FOUNDATION AND BASE
03/10	2-7		TRAFFIC SIGNAL UPS CABINET FOUNDATION DETAIL
	T.S. 3		**CABINETS**
03/10	3-0		NOTES FOR TYPE II AND IV LOAD CENTER CABINETS
03/10	3-1		TYPE II LOAD CENTER CABINET
03/10	3-2		TYPE IV LOAD CENTER CABINET
03/10	3-3		TYPE II OR IV LOAD CENTER CABINET WIRING DETAILS 240/480 3W W/DISCONNECT
03/10	3-4	SHT 1	PHOTO ELECTRIC CELL MOUNTING DETAILS
03/10	3-4	SHT 2	PHOTO ELECTRIC CELL MOUNTING DETAILS
03/10	3-5	SHT 1	TYPE I AND II METER PEDESTAL CABINET
03/10	3-5	SHT 2	METER PEDESTAL CABINET
03/10	3-6		TYPE III CONTROL CABINET
03/10	3-7		POLE MOUNTED TYPE III CONTROL CABINET
03/10	3-8	SHT 1	POLE MOUNT DETAILS FOR TYPE III CONTROL CABINET
03/10	3-8	SHT 2	POLE MOUNT DETAILS FOR TYPE III CONTROL CABINET
03/10	3-9	SHT 1	TYPE IV AND V CONTROL CABINET NOTES
03/10	3-9	SHT 2	TYPE IV CONTROL CABINET
03/10	3-9	SHT 3	TYPE V CONTROL CABINET
03/10	3-10		CABINET EXTENSION OR ELEVATOR BASE
03/10	3-11		CONTROL CABINET MOUNTED SERVICE ENCLOSURE
03/10	3-12	SHT 1	120/240 OR 240/480 VOLT, SINGLE PHASE UTILITY PULL SECTION AND SERVICE DISCONNECT DETAILS
03/10	3-12	SHT 2	120/240 OR 240/480 VOLT, SINGLE PHASE UTILITY PULL SECTION AND SERVICE DISCONNECT DETAILS
03/10	3-13	SHT 1	TRAFFIC SIGNALS AND LIGHTING MODEL 345 CABINET DETAILS
03/10	3-13	SHT 2	TRAFFIC SIGNALS AND LIGHTING MODEL 345 CABINET DETAILS
03/10	3-13	SHT 3	TRAFFIC SIGNALS AND LIGHTING MODEL 345 CABINET CAGE DETAILS

REVISION DATE	STANDARD NUMBER		SUBJECT: TRAFFIC SIGNALS AND LIGHTING DETAILS
	T.S. 4		**POLES AND POSTS**
03/10	4-1		TYPE "A" POLE
03/10	4-2		TYPE "E" POLE
03/10	4-3		TYPE "F" POLE
03/10	4-4		TYPE "G" POLE
03/10	4-5		ALUMINUM TYPE "G" POLE
03/10	4-6		ALUMINUM TYPE "H" POLE
03/10	4-7		ALUMINUM TYPE "I" POLE
03/10	4-8		TYPE "J" POLE
03/10	4-9		TYPE "K" POLE
03/10	4-10		TYPE "Q" POLE
03/10	4-11		TYPE "R" POLE
03/10	4-12		TYPE "S" POLE
03/10	4-13		ALUMINUM TYPE "S" POLE
03/10	4-14	SHT 1	TYPE "T" POLE
03/10	4-14	SHT 2	TYPE "S" AND "T" STEEL TWIN LUMINAIRE MOUNTING BRACKET AND EXTENSIONS
03/10	4-15		ALUMINUM TYPE "T" POLE
03/10	4-16		TYPE "U" POLE ELLIPTICAL BASE DETAILS
03/10	4-17	SHT 1	TYPE "U" POLE SQUARE BASE
03/10	4-17	SHT 2	TYPE "U" POLE ROUND POLE / SQUARE BASE
03/10	4-17	SHT 3	TYPE "U" POLE ROUND POLE / SQUARE BASE
03/10	4-17	SHT 4	TYPE "U" POLE ROUND POLE / SQUARE BASE
03/10	4-17	SHT 5	TYPE "U" POLE ROUND POLE / SQUARE BASE
03/10	4-17	SHT 6	TYPE "U" POLE ROUND POLE / SQUARE BASE
03/10	4-18		TYPE "V" POLE AND 60' OR 65' MAST ARM
03/10	4-19		TYPE "W" POLE AND 60' OR 65' MAST ARM
03/10	4-20		POLE HAND HOLE DETAIL
03/10	4-21		EQUIPMENT MOUNTING HEIGHT DETAILS
03/10	4-22		PEDESTRIAN PUSH BUTTON POST "TYPE PB POLE"
03/10	4-23		POLE FOUNDATION ANCHOR BOLTS
03/10	4-24		ADDITIONAL POLE FOUNDATION DETAILS
03/10	4-25	SHT 1	ALTERNATIVE POLE FOUNDATION FOR LOOSE SOIL CONDITIONS
03/10	4-25	SHT 2	ALTERNATIVE STEEL PIPE POLE FOUNDATION FOR SUITABLE SOIL CONDITIONS
03/10	4-26		STEEL MAST ARM DETAILS LUMINAIRE AND SIGNAL ARMS TO 20'
03/10	4-27		ALUMINUM TRUSS ARM DETAILS TYPE G, H, AND I POLES
03/10	4-28		SIGNAL MAST ARM CONNECTION DETAIL TYPE J AND Q POLES
03/10	4-29		SIGNAL MAST ARM CONNECTION DETAIL TYPE K AND R POLES
03/10	4-30		MAST ARM CONNECTION DETAIL TYPE V AND W POLES
03/10	4-31		SIGNAL MAST ARM TENON DETAIL
03/10	4-32		TYPICAL HIGHWAY LIGHTING OFFSETS IN CUT AND FILL SECTIONS
	T.S. 5		**POLE BASES - SPECIAL**
03/10	5-0		TYPE 2 AND 3 CAST ALUMINUM BREAK-AWAY BASES
03/10	5-1		TYPE 2 CAST ALUMINUM BREAK-AWAY BASE
03/10	5-2		TYPE 3 CAST ALUMINUM BREAK-AWAY BASE
03/10	5-3		INSTALLATION DETAILS FOR POLE FOUNDATIONS WITH TYPE 2 AND 3 BREAK-AWAY BASES
	T.S. 6		**HIGHWAY TRAFFIC DATA DETECTORS**
03/10	6-1		TYPE C VEHICLE DETECTOR LOOPS FOR TRAFFIC COUNTERS
03/10	6-2	SHT 1	TYPE SA AND SB SPEED/VEHICLE CLASSIFICATION SYSTEMS
03/10	6-2	SHT 2	TYPE SA SPEED/VEHICLE CLASSIFICATION SYSTEMS
03/10	6-2	SHT 3	TYPE SB SPEED/VEHICLE CLASSIFICATION SYSTEMS
03/10	6-3		PIEZOELECTRIC WEIGHT SENSOR AND LOOP LANE LAYOUT
03/10	6-4	SHT 1	DETECTOR LOOPS AND PIEZOELECTRIC SENSOR DETAILS
03/10	6-4	SHT 2	DETECTOR LOOPS AND PIEZOELECTRIC SENSOR DETAILS
03/10	6-4	SHT 3	DETAIL A PIEZOELECTRIC SENSOR DETAILS
03/10	6-4	SHT 4	DETAIL B DETECTOR LOOP DETAILS
03/10	6-4	SHT 5	DETECTOR LOOPS AND PIEZOELECTRIC SENSOR DETAILS
03/10	6-5		MICROLOOPS FOR SPEED/VEHICLE CLASSIFICATION
03/10	6-6		QUARTZ PIEZOELECTRIC WEIGHT SENSOR AND LOOP LANE LAYOUT
03/10	6-7		TRAFFIC DATA COLLECTION CABINET INSTALLATION DETAILS
03/10	6-8		TYPE MPD CABINET POLE, BASE AND FOUNDATION INSTALLATION DETAILS

NO.	DESCRIPTION OF REVISION	MADE BY	DATE
1	REVISED 1-1, 1-2, 1-3, 1-4, 1-5, 1-6, 1-8, 1-9, 1-10. ADDED 1-11 (4 SHTS).	L. LOPEZ	9/11
2	REVISED STANDARDS ON SHEET 2.	C. COLE	1/12

ADOT STANDARD DRAWINGS
REVISION DATES and STANDARD NO.'s REVIEW

	NAME	DATE
TRAFFIC SIGNAL & LIGHTING STANDARDS		

PROJECT NO. PRV 0000 YV SL680 01C — 1C-1 OF ____

AS BUILT DATA — FEDERAL AID NO. TEA-PRV-0(205)A — AS BUILT DATE ____ — ____ OF ____

ADOT STANDARD DRAWINGS

TRAFFIC SIGNAL AND LIGHTING STANDARDS
(SHEET 2 OF 2)
EFFECTIVE JANUARY 2012

REVISION DATE	STANDARD NUMBER		SUBJECT: TRAFFIC SIGNALS AND LIGHTING DETAILS
	T.S. 7		**TRAFFIC SIGNAL DETECTORS**
03/10	7-1	SHT 1	LOOP DETECTOR LOCATION SAWCUT PATTERNS AND INSTALLATION DETAILS
03/10	7-1	SHT 2	SAW CUT AND CORING DETAILS
03/10	7-1	SHT 3	SAW CUT AND CORING DETAILS
03/10	7-1	SHT 4	TYPICAL DETECTOR LOOP LEAD-IN ROAD TO PULL BOX DETAIL
03/10	7-1	SHT 5	LOOP DETECTOR LOCATION AND INSTALLATION DETAILS
03/10	7-2		PRE-FORMED LOOP DETECTORS FOR RAMP METERING AND COUNTING
03/10	7-3		PRE-FORMED LOOP DETECTORS IN BRIDGE DECK
03/10	7-4		PRE-FORMED LOOP DETECTORS IN PCCP
03/10	7-5		TYPICAL PRE-FORMED LOOP DETECTOR STUB-OUT DETAIL
	T.S. 8		**SIGNAL ASSEMBLIES**
01/12	8-0		TRAFFIC SIGNAL REQUIREMENTS AND DETAILS
01/12	8-1		VEHICLE TRAFFIC SIGNAL FACE ASSEMBLY
01/12	8-2		VEHICLE TRAFFIC SIGNAL FACE ASSEMBLY
01/12	8-3		VEHICLE TRAFFIC SIGNAL FACE ASSEMBLY
03/10	8-4	SHT 1	12-INCH VEHICLE TRAFFIC SIGNAL HOUSING/SECTION
01/12	8-4	SHT 2	12-INCH VEHICLE TRAFFIC SIGNAL HOUSING/SECTION NOTES
01/12	8-4	SHT 3	VEHICLE TRAFFIC SIGNAL HOUSING/SECTION DETAILS
03/10	8-4	SHT 4	VISORS FOR 8-INCH AND 12-INCH VEHICLE TRAFFIC SIGNAL FACE ASSEMBLY'S
01/12	8-5		FLASHING BEACON SIGNAL FACE ASSEMBLY
01/12	8-6	SHT 1	LED LAMP FOR PROGRAMMED VISIBILITY SIGNAL
01/12	8-6	SHT 2	PEDESTRIAN SIGNAL ASSEMBLY REQUIREMENTS AND DETAILS
01/12	8-6	SHT 3	PEDESTRIAN SIGNAL ASSEMBLY HOUSING
	T.S. 9		**MOUNTING ASSEMBLIES - SIGNAL**
03/10	9-0	SHT 1	MOUNTING ASSEMBLY GENERAL REQUIREMENTS
03/10	9-0	SHT 2	MOUNTING ASSEMBLY GENERAL REQUIREMENTS
03/10	9-1		TYPE I AND II MOUNTING ASSEMBLIES
03/10	9-2		TYPE III AND IV MOUNTING ASSEMBLIES
03/10	9-3		TYPE V MOUNTING ASSEMBLY
03/10	9-4		TYPE VI MOUNTING ASSEMBLY
03/10	9-5		TYPE VII MOUNTING ASSEMBLY
03/10	9-6		TYPE VIII MOUNTING ASSEMBLY
03/10	9-7		TYPE IX MOUNTING ASSEMBLY
03/10	9-8		TYPE X MOUNTING ASSEMBLY
03/10	9-9		TYPE XI MOUNTING ASSEMBLY
	T.S. 10		**MOUNTING CASTINGS - SIGNAL**
03/10	10-1		MISCELLANEOUS SIGNAL MOUNTING PARTS
03/10	10-2		MAST ARM SIGNAL MOUNTING PLUMBIZER
03/10	10-3		SIGNAL MOUNTING POLE PLATE DETAILS
03/10	10-4		TERMINAL COMPARTMENT, SIDE MOUNTED AND POLE TOP MOUNTED
	T.S. 11		**PEDESTRIAN DETAILS**
03/10	11-1		TYPE I PEDESTRIAN PUSH BUTTON HOUSING ASSEMBLY
03/10	11-2		CAN STYLE PEDESTRIAN PUSH BUTTON
	T.S. 12		**FLASHERS**
03/10	12-1	SHT 1	ADVANCE WARNING FLASHER POLE DETAIL
03/10	12-1	SHT 2	ADVANCE WARNING FLASHER POLE SIGN MOUNTING DETAILS
03/10	12-1	SHT 3	ADVANCE WARNING FLASHER POLE DETAIL
	T.S. 13		**ILLUMINATION - SIGNS**
03/10	13-1		SIGN LIGHTING DETAIL FOR TUBULAR SIGN STRUCTURES
03/10	13-2		FUSE PANEL DETAILS FOR SIGN LIGHTING
03/10	13-3		PLACEMENT OF LIGHTING FIXTURES FOR OVERHEAD SIGNS
	T.S. 14		**ILLUMINATION - SPECIAL**
03/10	14-1	SHT 1	HIGH PRESSURE SODIUM (HPS) LAMPS
03/10	14-1	SHT 2	HIGH PRESSURE SODIUM (HPS) LAMPS
03/10	14-1	SHT 3	HIGH PRESSURE SODIUM (HPS) LAMPS
03/10	14-2		PEDESTRIAN BRIDGE LIGHTING DETAILS

REVISION DATE	STANDARD NUMBER		SUBJECT: SPAN WIRE SIGNALS AND LIGHTING DETAILS
	T.S. 15		**SERVICE**
01/12	15-0	SHT 1	GENERAL NOTES
01/12	15-0	SHT 2	GENERAL NOTES
01/12	15-0	SHT 3	GENERAL NOTES
01/12	15-1	SHT 1	STEEL POLE TYPICAL DETAILS
01/12	15-1	SHT 2	STEEL POLE FOUNDATION DETAILS
01/12	15-1	SHT 3	STEEL POLE ATTACHMENT DETAILS
01/12	15-1	SHT 4	WOOD POLE TYPICAL DETAILS
01/12	15-1	SHT 5	WOOD POLE TYPICAL DETAILS
01/12	15-1	SHT 6	TYPICAL DETAILS
01/12	15-2		HANGER AND BALANCE ADJUSTER TYPICAL DETAILS
01/12	15-3	SHT 1	SIGNAL ASSEMBLY DETAILS
01/12	15-3	SHT 2	CONDUCTOR ENTRANCE HEADS TYPE A, B AND C
01/12	15-3	SHT 3	ALUMINUM PIPE EXTENSION AND TYPICAL DETAILS
01/12	15-4	SHT 1	ADJUSTABLE SIGN HANGER TYPICAL DETAILS
01/12	15-4	SHT 2	ADJUSTABLE SIGN HANGER TYPICAL DETAILS
01/12	15-4	SHT 3	ADJUSTABLE SIGN HANGER TYPICAL DETAILS
01/12	15-5		ADJUSTABLE HANGER TOP AND EXTENSION DETAILS
01/12	15-6		SIGNAL TETHER CLAMP TYPICAL DETAILS
01/12	15-7		POLE BAND TYPICAL DETAILS
01/12	15-8		WEATHERHEAD TYPICAL DETAILS

NO.	DESCRIPTION OF REVISION	DATE	MADE BY
1	REVISED STANDARDS ON SHEET 1.	9/11	L. LOPEZ
2	REVISED SERIES 8 AND 15.	1/12	C. COLE

ADOT STANDARD DRAWINGS
REVISION DATES AND STANDARD NO.'s REVIEW

	NAME	DATE
TRAFFIC SIGNAL AND LIGHTING STANDARDS		

PROJECT NO. PRV 0000 YV SL680 01C — 1C-2 OF ____

AS BUILT DATA — FEDERAL AID NO. TEA-PRV-0(205)A — AS BUILT DATE — ____ OF ____

F.H.W.A. REGION	STATE	PROJECT NO.	SHEET NO.	TOTAL SHEETS	AS BUILT
9	ARIZ.	TEA-PRV-0(205)T	1D		

PRV 0000 YV

ADOT STANDARD DRAWINGS

STRUCTURE DETAIL DRAWINGS

REVISION DATE	SD NUMBER	SUBJECT
RAILINGS		
6/12	SD 1.01	F-SHAPE BRIDGE CONCRETE BARRIER AND TRANSITION (34")
6/12	SD 1.02	F-SHAPE BRIDGE CONCRETE BARRIER AND TRANSITION (44")
6/12	SD 1.03	THRIE BEAM GUARD RAIL TRANSITION SYSTEM
3/09	SD 1.04	COMBINATION PEDESTRIAN-TRAFFIC BRIDGE RAILING
3/09	SD 1.05	PEDESTRIAN FENCE FOR BRIDGE RAILING SD1.04
6/09	SD 1.06 (1 OF 4)	TWO TUBE BRIDGE RAIL
6/09	SD 1.06 (2 OF 4)	TWO TUBE BRIDGE RAIL
6/09	SD 1.06 (3 OF 4)	TWO TUBE BRIDGE RAIL
6/09	SD 1.06 (4 OF 4)	TWO TUBE BRIDGE RAIL
4/10	SD 1.11	BARRIER JUNCTION BOX
APPROACHES		
12/07	SD 2.01	APPROACH SLAB DETAILS
12/07	SD 2.02	TYPE 1 ANCHOR SLAB DETAILS
12/07	SD 2.03	TYPE 2 ANCHOR SLAB DETAILS
9/09	SD 2.04	SLOPE PAVING DETAILS
DECK JOINTS		
6/09	SD 3.01	DECK JOINT ASSEMBLY - COMPRESSION SEAL
12/09	SD 3.02	DECK JOINT ASSEMBLY - STRIP SEAL
12/09	SD 3.03	DECK JOINT ASSEMBLY - RAISED STRIP SEAL
SUBSTRUCTURE		
11/12	SD 5.01	STRUCTURAL EXCAVATION - PAYMENT LIMITS
11/12	SD 5.02	STRUCTURE BACKFILL - PAYMENT LIMITS
DRAINAGE STRUCTURES		
2/12	SD 6.01 (1 OF 5)	REINFORCED CONCRETE BOX CULVERTS - MISCELLANEOUS DETAILS
2/12	SD 6.01 (2 OF 5)	REINFORCED CONCRETE BOX CULVERTS - MISCELLANEOUS DETAILS
2/12	SD 6.01 (3 OF 5)	REINFORCED CONCRETE BOX CULVERTS - EXTENSION DETAILS
2/12	SD 6.01 (4 OF 5)	REINFORCED CONCRETE BOX CULVERTS - STRUCTURAL EXCAVATION & STRUCTURE BACKFILL
2/12	SD 6.01 (5 OF 5)	REINFORCED CONCRETE BOX CULVERTS - SINGLE BARREL (0'-30' FILLS)
2/12	SD 6.02 (1 OF 2)	REINFORCED CONCRETE BOX CULVERTS - DOUBLE BARREL (0'-15' FILLS)
2/12	SD 6.02 (2 OF 2)	REINFORCED CONCRETE BOX CULVERTS - DOUBLE BARREL (15'-30' FILLS)
2/12	SD 6.03 (1 OF 2)	REINFORCED CONCRETE BOX CULVERTS - TRIPLE BARREL (0'-15' FILLS)
2/12	SD 6.03 (2 OF 2)	REINFORCED CONCRETE BOX CULVERTS - TRIPLE BARREL (15'-30' FILLS)
2/12	SD 6.04 (1 OF 2)	REINFORCED CONCRETE BOX CULVERTS - FOUR BARREL (0'-15' FILLS)
2/12	SD 6.04 (2 OF 2)	REINFORCED CONCRETE BOX CULVERTS - FOUR BARREL (15'-30' FILLS)
2/12	SD 6.05 (1 OF 2)	REINFORCED CONCRETE BOX CULVERTS - FIVE BARREL (0'-15' FILLS)
2/12	SD 6.05 (2 OF 2)	REINFORCED CONCRETE BOX CULVERTS - FIVE BARREL (15'-30' FILLS)
2/12	SD 6.06 (1 OF 2)	REINFORCED CONCRETE BOX CULVERTS - SIX BARREL (0'-15' FILLS)
2/12	SD 6.06 (2 OF 2)	REINFORCED CONCRETE BOX CULVERTS - SIX BARREL (15'-30' FILLS)
2/12	SD 6.07	REINFORCED CONCRETE BOX CULVERTS - 16' x 14' EQUIPMENT PASS (0'-20' FILLS)
2/12	SD 6.08 (1 OF 8)	REINFORCED CONCRETE BOX CULVERTS - OUTLET WINGS - SKEW 0°to 20° - CULVERT HEIGHT 5'to 7'
2/12	SD 6.08 (2 OF 8)	REINFORCED CONCRETE BOX CULVERTS - OUTLET WINGS - SKEW 0°to 20° - CULVERT HEIGHT 8'to 12'
2/12	SD 6.08 (3 OF 8)	REINFORCED CONCRETE BOX CULVERTS - INLET WINGS - SKEW 0°to 20° - CULVERT HEIGHT 5'to 7'
2/12	SD 6.08 (4 OF 8)	REINFORCED CONCRETE BOX CULVERTS - INLET WINGS - SKEW 0°to 20° - CULVERT HEIGHT 8'to 12'
2/12	SD 6.08 (5 OF 8)	REINFORCED CONCRETE BOX CULVERTS - OUTLET WINGS - SKEW 25°to 45° - CULVERT HEIGHT 5'to 7'
2/12	SD 6.08 (6 OF 8)	REINFORCED CONCRETE BOX CULVERTS - OUTLET WINGS - SKEW 25°to 45° - CULVERT HEIGHT 8'to 12'
2/12	SD 6.08 (7 OF 8)	REINFORCED CONCRETE BOX CULVERTS - INLET WINGS - SKEW 25°to 45° - CULVERT HEIGHT 5'to 7'
2/12	SD 6.08 (8 OF 8)	REINFORCED CONCRETE BOX CULVERTS - INLET WINGS - SKEW 25°to 45° - CULVERT HEIGHT 8'to 12'
2/12	SD 6.09 (1 OF 3)	REINFORCED CONCRETE BOX CULVERTS - HEADWALL QUANTITIES - 2 :1 SLOPE
2/12	SD 6.09 (2 OF 3)	REINFORCED CONCRETE BOX CULVERTS - HEADWALL QUANTITIES - 4 :1 SLOPE
2/12	SD 6.09 (3 OF 3)	REINFORCED CONCRETE BOX CULVERTS - HEADWALL QUANTITIES - 6 :1 SLOPE
2/12	SD 6.10 (1 OF 2)	REINFORCED CONCRETE BOX CULVERTS - INLET OR OUTLET - LEVEL WINGS - CULVERT HEIGHT 5'to 7'
2/12	SD 6.10 (2 OF 2)	REINFORCED CONCRETE BOX CULVERTS - INLET OR OUTLET - LEVEL WINGS - CULVERT HEIGHT 8'to 12'
2/12	SD 6.11 (1 OF 4)	REINFORCED CONCRETE BOX CULVERTS - OUTLET APRON DETAILS
2/12	SD 6.11 (2 OF 4)	REINFORCED CONCRETE BOX CULVERTS - OUTLET APRON - DIMENSIONS & QUANTITIES (2 :1 SLOPE)
2/12	SD 6.11 (3 OF 4)	REINFORCED CONCRETE BOX CULVERTS - OUTLET APRON - DIMENSIONS & QUANTITIES (4 :1 SLOPE)
2/12	SD 6.11 (4 OF 4)	REINFORCED CONCRETE BOX CULVERTS - OUTLET APRON - DIMENSIONS & QUANTITIES (6 :1 SLOPE)
7/12	SD 6.30 (1 OF 5)	PIPE CULVERT HEADWALLS - MISCELLANEOUS DETAILS
7/12	SD 6.30 (2 OF 5)	PIPE CULVERT HEADWALLS - INLET AND OUTLET - 18" to 42" PIPES
7/12	SD 6.30 (3 OF 5)	PIPE CULVERT HEADWALLS - RIGHT ANGLE INLET AND OUTLET - 48" to 84" PIPES
7/12	SD 6.30 (4 OF 5)	PIPE CULVERT HEADWALLS - SKEWED INLET AND OUTLET - 48" to 84" PIPES
7/12	SD 6.30 (5 OF 5)	PIPE CULVERT HEADWALLS - MULTI-PIPE - 48" to 84" PIPES
7/12	SD 6.31 (1 OF 8)	PIPE CULVERT HEADWALLS - RIGHT ANGLE INLET
7/12	SD 6.31 (2 OF 8)	PIPE CULVERT HEADWALLS - RIGHT ANGLE INLET - 2 :1 SLOPE
7/12	SD 6.31 (3 OF 8)	PIPE CULVERT HEADWALLS - RIGHT ANGLE INLET - 4 :1 SLOPE
7/12	SD 6.31 (4 OF 8)	PIPE CULVERT HEADWALLS - RIGHT ANGLE INLET - 6 :1 SLOPE
7/12	SD 6.31 (5 OF 8)	PIPE CULVERT HEADWALLS - RIGHT ANGLE OUTLET
7/12	SD 6.31 (6 OF 8)	PIPE CULVERT HEADWALLS - RIGHT ANGLE OUTLET - 2 :1 SLOPE
7/12	SD 6.31 (7 OF 8)	PIPE CULVERT HEADWALLS - RIGHT ANGLE OUTLET - 4 :1 SLOPE
7/12	SD 6.31 (8 OF 8)	PIPE CULVERT HEADWALLS - RIGHT ANGLE OUTLET - 6 :1 SLOPE

STRUCTURE DETAIL DRAWINGS

REVISION DATE	SD NUMBER	SUBJECT
DRAINAGE STRUCTURES (Continued)		
7/12	SD 6.32 (1 OF 8)	PIPE CULVERT HEADWALLS - 15° SKEW INLET
7/12	SD 6.32 (2 OF 8)	PIPE CULVERT HEADWALLS - 15° SKEW INLET - 2 :1 SLOPE
7/12	SD 6.32 (3 OF 8)	PIPE CULVERT HEADWALLS - 15° SKEW INLET - 4 :1 SLOPE
7/12	SD 6.32 (4 OF 8)	PIPE CULVERT HEADWALLS - 15° SKEW INLET - 6 :1 SLOPE
7/12	SD 6.32 (5 OF 8)	PIPE CULVERT HEADWALLS - 15° SKEW OUTLET
7/12	SD 6.32 (6 OF 8)	PIPE CULVERT HEADWALLS - 15° SKEW OUTLET - 2 :1 SLOPE
7/12	SD 6.32 (7 OF 8)	PIPE CULVERT HEADWALLS - 15° SKEW OUTLET - 4 :1 SLOPE
7/12	SD 6.32 (8 OF 8)	PIPE CULVERT HEADWALLS - 15° SKEW OUTLET - 6 :1 SLOPE
7/12	SD 6.33 (1 OF 8)	PIPE CULVERT HEADWALLS - 30° SKEW INLET
7/12	SD 6.33 (2 OF 8)	PIPE CULVERT HEADWALLS - 30° SKEW INLET - 2 :1 SLOPE
7/12	SD 6.33 (3 OF 8)	PIPE CULVERT HEADWALLS - 30° SKEW INLET - 4 :1 SLOPE
7/12	SD 6.33 (4 OF 8)	PIPE CULVERT HEADWALLS - 30° SKEW INLET - 6 :1 SLOPE
7/12	SD 6.33 (5 OF 8)	PIPE CULVERT HEADWALLS - 30° SKEW OUTLET
7/12	SD 6.33 (6 OF 8)	PIPE CULVERT HEADWALLS - 30° SKEW OUTLET - 2 :1 SLOPE
7/12	SD 6.33 (7 OF 8)	PIPE CULVERT HEADWALLS - 30° SKEW OUTLET - 4 :1 SLOPE
7/12	SD 6.33 (8 OF 8)	PIPE CULVERT HEADWALLS - 30° SKEW OUTLET - 6 :1 SLOPE
7/12	SD 6.34 (1 OF 8)	PIPE CULVERT HEADWALLS - 45° SKEW INLET
7/12	SD 6.34 (2 OF 8)	PIPE CULVERT HEADWALLS - 45° SKEW INLET - 2 :1 SLOPE
7/12	SD 6.34 (3 OF 8)	PIPE CULVERT HEADWALLS - 45° SKEW INLET - 4 :1 SLOPE
7/12	SD 6.34 (4 OF 8)	PIPE CULVERT HEADWALLS - 45° SKEW INLET - 6 :1 SLOPE
7/12	SD 6.34 (5 OF 8)	PIPE CULVERT HEADWALLS - 45° SKEW OUTLET
7/12	SD 6.34 (6 OF 8)	PIPE CULVERT HEADWALLS - 45° SKEW OUTLET - 2 :1 SLOPE
7/12	SD 6.34 (7 OF 8)	PIPE CULVERT HEADWALLS - 45° SKEW OUTLET - 4 :1 SLOPE
7/12	SD 6.34 (8 OF 8)	PIPE CULVERT HEADWALLS - 45° SKEW OUTLET - 6 :1 SLOPE
7/12	SD 6.35 (1 OF 2)	PIPE CULVERT HEADWALLS - MULTI-PIPE WITHOUT APRON
7/12	SD 6.35 (2 OF 2)	PIPE CULVERT HEADWALLS - MULTI-PIPE WITH OUTLET APRON
7/12	SD 6.36 (1 OF 4)	PIPE CULVERT HEADWALLS - OUTLET APRONS
7/12	SD 6.36 (2 OF 4)	PIPE CULVERT HEADWALLS - OUTLET APRON STEEL LIST - 2 :1 SLOPE
7/12	SD 6.36 (3 OF 4)	PIPE CULVERT HEADWALLS - OUTLET APRON STEEL LIST - 4 :1 SLOPE
7/12	SD 6.36 (4 OF 4)	PIPE CULVERT HEADWALLS - OUTLET APRON STEEL LIST - 6 :1 SLOPE
RETAINING WALLS		
9/10	SD 7.01 (1 OF 5)	RETAINING WALL (REINFORCED CONCRETE CANTILEVER)
9/10	SD 7.01 (2 OF 5)	RETAINING WALL (REINFORCED CONCRETE CANTILEVER)
9/10	SD 7.01 (3 OF 5)	RETAINING WALL (REINFORCED CONCRETE CANTILEVER)
9/10	SD 7.01 (4 OF 5)	RETAINING WALL (REINFORCED CONCRETE CANTILEVER)
9/10	SD 7.01 (5 OF 5)	RETAINING WALL (REINFORCED CONCRETE CANTILEVER)
9/10	SD 7.02 (1 OF 2)	RETAINING WALL (MASONRY CANTILEVER)
9/10	SD 7.02 (2 OF 2)	RETAINING WALL (MASONRY CANTILEVER)
SOUND BARRIER WALLS		
4/10	SD 8.01	SOUND BARRIER WALL (CONCRETE)
1/13	SD 8.02 (1 OF 2)	SOUND BARRIER WALL (MASONRY)
1/13	SD 8.02 (2 OF 2)	SOUND BARRIER WALL (MASONRY)
TRAFFIC STRUCTURES		
11/04	SD 9.01 (1 OF 5)	MEDIAN SIGN STRUCTURE (TWO SIDED) - ELEVATION & NOTES
4/00	SD 9.01 (2 OF 5)	MEDIAN SIGN STRUCTURE (TWO SIDED) - FOUNDATION DETAILS
4/00	SD 9.01 (3 OF 5)	MEDIAN SIGN STRUCTURE (TWO SIDED) - TYPE A SIGN MOUNT ASSEMBLY
4/00	SD 9.01 (4 OF 5)	MEDIAN SIGN STRUCTURE (TWO SIDED) - TYPE B SIGN MOUNT ASSEMBLY
4/00	SD 9.01 (5 OF 5)	MEDIAN SIGN STRUCTURE (TWO SIDED) - LIGHT SUPPORT AND MISC. DETAILS
11/04	SD 9.02 (1 OF 5)	MEDIAN SIGN STRUCTURE (ONE SIDED) - ELEVATION & NOTES
5/00	SD 9.02 (2 OF 5)	MEDIAN SIGN STRUCTURE (ONE SIDED) - FOUNDATION DETAILS
5/00	SD 9.02 (3 OF 5)	MEDIAN SIGN STRUCTURE (ONE SIDED) - TYPE A SIGN MOUNT ASSEMBLY
5/00	SD 9.02 (4 OF 5)	MEDIAN SIGN STRUCTURE (ONE SIDED) - TYPE B SIGN MOUNT ASSEMBLY
5/00	SD 9.02 (5 OF 5)	MEDIAN SIGN STRUCTURE (ONE SIDED) - LIGHT SUPPORT AND MISC. DETAILS
3/11	SD 9.10 (1 OF 5)	TUBULAR SIGN STRUCTURES - TUBULAR CANTILEVER - GENERAL PLAN
3/11	SD 9.10 (2 OF 5)	TUBULAR SIGN STRUCTURES - TUBULAR CANTILEVER - FOUNDATION DETAILS
3/11	SD 9.10 (3 OF 5)	TUBULAR SIGN STRUCTURES - TUBULAR CANTILEVER - POST AND MAST ARM DETAILS
3/11	SD 9.10 (4 OF 5)	TUBULAR SIGN STRUCTURES - TUBULAR CANTILEVER - SIGN SUPPORT DETAILS
3/11	SD 9.10 (5 OF 5)	TUBULAR SIGN STRUCTURES - TUBULAR CANTILEVER - LIGHT SUPPORT DETAILS
3/11	SD 9.20 (1 OF 5)	TUBULAR SIGN STRUCTURES - TUBULAR FRAME - GENERAL PLAN
3/11	SD 9.20 (2 OF 5)	TUBULAR SIGN STRUCTURES - TUBULAR FRAME - FOUNDATION DETAILS
3/11	SD 9.20 (3 OF 5)	TUBULAR SIGN STRUCTURES - TUBULAR FRAME - POST AND MAST ARM DETAILS
3/11	SD 9.20 (4 OF 5)	TUBULAR SIGN STRUCTURES - TUBULAR FRAME - SIGN SUPPORT DETAILS
3/11	SD 9.20 (5 OF 5)	TUBULAR SIGN STRUCTURES - TUBULAR FRAME - LIGHT SUPPORT AND MISC. DETAILS
8/02	SD 9.50 (1 OF 5)	VARIABLE MESSAGE SIGN - TUBULAR FRAME - PLAN & ELEVATION
8/02	SD 9.50 (2 OF 5)	VARIABLE MESSAGE SIGN - TUBULAR FRAME - MOUNTING DETAILS
8/02	SD 9.50 (3 OF 5)	VARIABLE MESSAGE SIGN - TUBULAR FRAME - MOUNTING & SIGN BRACKET DETAILS
7/00	SD 9.50 (4 OF 5)	VARIABLE MESSAGE SIGN - CATWALK - HANDRAIL DETAILS
7/00	SD 9.50 (5 OF 5)	VARIABLE MESSAGE SIGN - CATWALK - MISCELLANEOUS DETAILS
8/02	SD 9.51	DUAL VARIABLE MESSAGE SIGN - TUBULAR FRAME
5/07	SD 9.52 (1 of 5)	DYNAMIC MESSAGE SIGN - TUBULAR FRAME - PLAN & ELEVATION
5/07	SD 9.52 (2 of 5)	DYNAMIC MESSAGE SIGN - TUBULAR FRAME - MOUNTING DETAILS
5/07	SD 9.52 (3 of 5)	DYNAMIC MESSAGE SIGN - TUBULAR FRAME - MOUNTING DETAILS
5/07	SD 9.52 (4 of 5)	DYNAMIC MESSAGE SIGN - CATWALK - HANDRAIL DETAILS
5/07	SD 9.52 (5 of 5)	DYNAMIC MESSAGE SIGN - CATWALK - MISCELLANEOUS DETAILS

REV.: 01 / 13

ADOT STANDARD DRAWINGS REVISION DATES and STANDARD NO.'s REVIEW		
	NAME	DATE
STRUCTURES Standards		

F.H.W.A. REGION	STATE	PROJECT NO.	SHEET NO.	TOTAL SHEETS	AS BUILT
9	ARIZ.	TEA-PRV-0(205)T			
		PRV 0000 YV			

MIDPOINT OF PROJECT

Central Zone
State Plane Coordinates

X=581642.93
Y=1312756.22

DESIGN DATA

2012 AADT = N/A
2022 AADT = N/A

Design Speed = Varies throughout Project
12-30 mph

EARTHWORK FACTORS		
Station	*Shrink/Swell*	*Ground Compaction*
Entire Project	*10% Shrink*	*0.10'*

LENGTH OF PROJECT

Pipeline Phase 1 Seg 1 Sta 100+00.00 to Sta 107+17.73 = 717.73'
Pipeline Phase 1 Seg 2 Sta 200+00.00 to Sta 212+46.14 = 1246.14'
Pipeline Phase 1 Seg 3 Sta 300+00.00 to Sta 301+72.05 = 172.05'
Pipeline Phase 1 Seg 4 Sta 400+00.00 to Sta 419+42.70 = 1942.70'

Pipeline Phase 2 Seg 1 Sta 500+00.00 to Sta 540+63.17 = 4,063.17'

Pipeline Phase 3 Seg 1 Sta 400+00.00 to Sta 431+81.29 = 3,181.29'

Central Core Ph 3 Seg 1 Sta 10+00.00 to Sta 16+24.26 = 624.26'
Central Core Ph 3 Seg 2 Sta 20+00.00 to Sta 23+13.96= 313.96'
Central Core Ph 3 Seg 3 Sta 30+00.00 to Sta 35+20.23 = 520.23'
Central Core Ph 3 Seg 4 Sta 40+00.00 to Sta 45+34.20 = 534.20'
Central Core Ph 3 Seg 5 Sta 50+00.00 to Sta 57+03.04 = 703.04'
Central Core Ph 3 Seg 6 Sta 60+00.00 to Sta 68+30.03 = 830.03'
Central Core Ph 3 Seg 7 Sta 70+00.00 to Sta 82+76.46 = 1,276.46'

Net Length = 16,125.26' (3.05 Miles)
Gross Length = 3.08 Miles

EARTHWORK QUANTITIES PIPELINE PH 1	
Roadway Excavation	*1,028 CY*
Shrink (10%)	*103 CY*
Pipe Excavation	*94 CY*
Shrink (10%)	*9 CY*
Borrow (In Place)	*649 CY*
Pipe Backfill	*42 CY*
Trench Backfill	*10 CY*
Embankment	*1,607 CY*

EARTHWORK QUANTITIES PIPELINE PH 2	
Roadway Excavation	*1,134 CY*
Shrink (10%)	*113 CY*
Pipe Excavation	*59 CY*
Shrink (10%)	*6 CY*
Borrow (In Place)	*219 CY*
Pipe Backfill	*26 CY*
Trench Backfill	*8 CY*
Embankment	*1,259 CY*

EARTHWORK QUANTITIES PIPELINE PH 3	
Roadway Excavation	*68 CY*
Shrink (10%)	*7 CY*
Pipe Excavation	*777 CY*
Shrink (10%)	*78 CY*
Borrow (In Place)	*1,508 CY*
Pipe Backfill	*393 CY*
Trench Backfill	*0 CY*
Embankment	*1,875 CY*

EARTHWORK QUANT. CENT. CORE PH 3	
Roadway Excavation	*169 CY*
Shrink (10%)	*10 CY*
Pipe Excavation	*0 CY*
Shrink (10%)	*0 CY*
Borrow (In Place)	*0 CY*
Pipe Backfill	*0 CY*
Trench Backfill	*0 CY*
Embankment	*91 CY*
Waste	*68 CY*

EARTHWORK QUANT. TOTAL PROJECT	
Roadway Excavation	*2,399 CY*
Shrink (10%)	*233 CY*
Pipe Excavation	*930 CY*
Shrink (10%)	*93 CY*
Borrow (In Place)	*2,308 CY*
Pipe Backfill	*461 CY*
Trench Backfill	*18 CY*
Embankment	*4,832 CY*
Waste	*0 CY*

GENERAL NOTES

The roadway plans have been developed utilizing the 2012 Construction Standard Drawings (C-Series), and current revisions. Refer to the 1A Sheet for a listing of current revision dates.

Horizontal locations of some existing utilities are not shown. The contractor shall comply with all current Blue Stake laws and Section 107.15.

Overhead power lines exist within the limits of the project. The contractor shall exercise extreme caution and comply with OSHA requirements when working in the vicinity of the overhead lines.

The average project elevation is 4978 ft.

The contractor may prepare another traffic control plan in accordance with section 701 of the Specifications. All traffic control plans and adjustments to the details of these traffic control plans are subject to the approval of the Engineer.

No temporary construction easements or right-of-way is required for this project.

Pavement lift thickness is nominal.

In the locations that require a separation geotextile fabric, the separation geotextile fabric shall meet the requirements for a medium survivability fabric. In addition the type of separation geotextile fabric shall be nonwoven.

Note:

From Sta 514+00 to 540+63.17, the contractor shall assume that there is less than 2' of cover over the existing EPNG gas line. Therefore, wheel loads exceeding 2500 lbs are prohibited for vehicles that cross the existing EPNG gas line.

	NAME	DATE
DESIGN	SMG	06/14
DRAWN	CPG	06/14
CHECKED	GPF	06/14

PARSONS BRINCKERHOFF

ARIZONA DEPARTMENT OF TRANSPORTATION
INTERMODAL TRANSPORTATION DIVISION
ROADWAY DESIGN SECTION

DESIGN SHEET

ROUTE | LOCATION PRESCOTT VALLEY PIPELINE & CENTRAL CORE MULTI-USE PATHS (PIPELINE PHASE 1)

Registered Professional Engineer (Civil) CERTIFICATE NO. 49430 GREGORY PATRICK FLY ARIZONA U.S.A.
Expires 3/31/2015

DWG NO. G-1.01

TRACS NO. SL680 01C | TEA-PRV-0(205)T | ____ OF ____

DATE- LOCATION- REVISIONS- FINISHED PLANS- SURVEY NO.

F.H.W.A. REGION	STATE	PROJECT NO.	SHEET NO.	TOTAL SHEETS	AS BUILT
9	ARIZ.	TEA-PRV-0(205)T			
		PRV 0000 YV			

INDEX OF SHEETS

DWG No.	Sheet Type
1	Face Sheet
1A to 1D	ADOT Standard Drawings
G-1.01 to G-1.02	Design Sheets (Entire Project)
G1-1.01	Pipeline Phase 1 Keymap
G1-2.01 to G1-2.02	Typical Sections/Pavement Sections Sheet
G1-3.01	Curb and Gutter Summary Sheet
G1-4.01-G1-4.02	Summary Sheets
G1-5-01 to G1-5.17	Detail Sheets
C1-1.01 to C1-1.02	Geometric Control Sheet
C1-2.01 to C1-2.10	Plan & Profile Sheets
D1-1.01	Pipe Profile Sheet
T1-1.01 to T1-2.02	Signing Sheets
T1-3.01 to T1-3.03	Traffic Control Sheets
S1-1.01 to S1-1.33	Wall Profile Sheets
E1-1.01 to E2-2.05	Erosion Control Sheets
G2-1.01	Pipeline Phase 2 Keymap
G2-2.01 to G2-2.02	Typical Sections/Pavement Sections Sheet
G2-3.01 to G2-3.02	Summary Sheets
G2-4.01 to G2-4.21	Detail Sheets
C2-1.01	Geometric Control Sheet
C2-2.01 to C2-2.08	Plan & Profile Sheets
D2-1.01	Pipe Profile Sheet
T2-1.01 to T2-2.01	Signing Sheets
T2-3.01 to T2-3.03	Traffic Control Sheets
S2-1.01 to S2-1.34	Wall Profile Sheets
E2-1.01 to E2-2.04	Erosion Control Sheets
G3-1.01	Pipeline Phase 3 Keymap
G3-2.01 to G3-2.02	Typical Sections/Pavement Sections Sheet
G3-3.01 to G3-4.01	Summary Sheets
G3-5.02 to G3-5.02	Detail Sheets
C3-1.01 to C3-1.02	Geometric Control Sheets
C3-2.01 to C3-2.04	Plan & Profile Sheets
C3-2.05	Pipe Profile Sheet
T3-1.01 to T3-2.01	Signing Sheets
T3-3.01 to T3-3.03	Traffic Control Sheets
E3-1.01 to E3-2.02	Erosion Control Sheets
G4-1.01	Central Core Phase 3 Keymap
G4-2.01 to G4-2.02	Typical Sections/Pavement Sections Sheet
G4-3.01	Summary Sheets
G4-4.01 to G4-4.06	Detail Sheets
C4-1.01 to C4-1.04	Geometric Control Sheets
C4-2.01 to C4-2.08	Plan & Profile Sheets
T4-1.01 to T4-2.03	Signing Sheets
T4-3.01 to T4-3.03	Traffic Control Sheets
E4-1.01 to E4-2.02	Erosion Control Sheets
M-1.01 to M-1.03	MAG Standard Detail Sheets

GEOMETRIC CONTROL

Horizontal Survey Datum: NAD 83 International Survey Foot
Vertical Datum: NAVD 1929
Grid to Ground Scale Factor: 1.000323377422

GROUND COORDINATES

CONTROL NO.	NORTHING	EASTING	ELEVATION	PV REF POINT DESCRIPTION
3001	1320548.89	577191.05	4918.91	RP 04 Brass Cap Flush In Concrete
3002	1320444.84	582625.16	4884.58	RP 05 Brass Cap Flush In Concrete
3006	1315351.39	577065.95	5018.03	RP 06 Brass Cap Flush In Concrete
3011	1315118.20	587753.62	4884.83	RP 08 Brass Cap Flush In Concrete
3008	1310167.33	576979.77	5066.83	RP 11 Brass Cap Flush In Concrete
3009	1309837.92	582276.03	5015.93	RP 12 Brass Cap Flush In Concrete
3010	1310945.69	587540.20	4961.63	RP 13 Brass Cap Flush In Concrete
3007	1313442.04	579555.97	5015.71	RP 21 Brass Cap Flush In Concrete

	NAME	DATE
DESIGN	SMG	06/14
DRAWN	CPG	06/14
CHECKED	GPF	06/14

PARSONS BRINCKERHOFF

ARIZONA DEPARTMENT OF TRANSPORTATION
INTERMODAL TRANSPORTATION DIVISION
ROADWAY DESIGN SECTION

INDEX OF SHEETS

ROUTE | LOCATION: PRESCOTT VALLEY PIPELINE & CENTRAL CORE MULTI-USE PATHS (PIPELINE PHASE 1)

Registered Professional Engineer (Civil) CERTIFICATE NO. 49430 GREGORY PATRICK FLY ARIZONA U.S.A. Expires 3/31/2015

DWG NO. G-1.02

TRACS NO. SL680 01C | TEA-PRV-0(205)T | ____ OF ____

DATE- | LOCATION- | REVISIONS- | FINISHED PLANS- | SURVEY NO.

F.H.W.A. REGION	STATE	PROJECT NO.	SHEET NO.	TOTAL SHEETS	AS BUILT
9	ARIZ.	TEA-PRV-0(205)T			
		PRV 0000 YV			

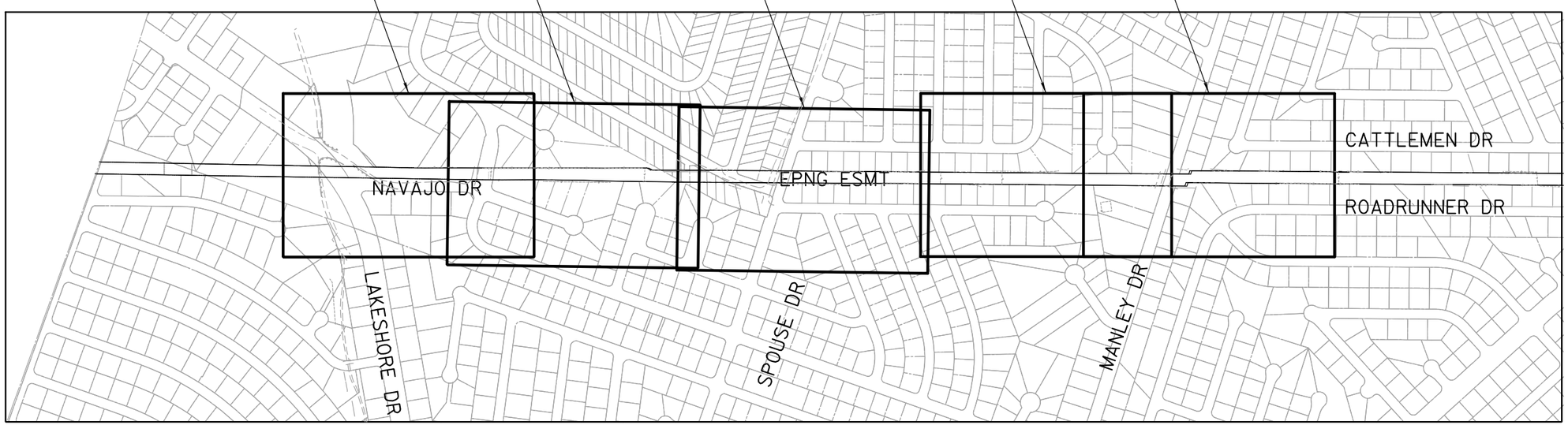

PIPELINE PHASE 1

Legend:

- (XXX) *Geometric Control Point*
- (XXX) *Geometric Curve Reference*
- (X) *Pipe Symbol*
- (MH/X) *Manhole Symbol*
- (PE/X) *Pipe Extension Symbol*
- (X) *Barrier Symbol*
- [EX] *Erosion Control Reference*

	NAME	DATE
DESIGN	SMG	06/14
DRAWN	CPG	06/14
CHECKED	GPF	06/14

PARSONS BRINCKERHOFF

ARIZONA DEPARTMENT OF TRANSPORTATION
INTERMODAL TRANSPORTATION DIVISION
ROADWAY DESIGN SECTION

KEYMAP

ROUTE | LOCATION: PRESCOTT VALLEY PIPELINE & CENTRAL CORE MULTI-USE PATHS (PIPELINE PHASE 1)

Registered Professional Engineer (Civil) CERTIFICATE NO. 49430 GREGORY PATRICK FLY ARIZONA U.S.A. Expires 3/31/2015

DWG NO. G1-1.01

TRACS NO. SL680 01C | TEA-PRV-0(205)T | ___ OF ___

DATE- | LOCATION- | REVISIONS- | FINISHED PLANS- | SURVEY NO.

9/12/2014 T:\Prescott_MUP\SL622_ph1\MUP\SL622_key.dgn

F.H.W.A. REGION	STATE	PROJECT NO.	SHEET NO.	TOTAL SHEETS	AS BUILT
9	ARIZ.	TEA-PRV-0(205)T			
		PRV 0000 YV			

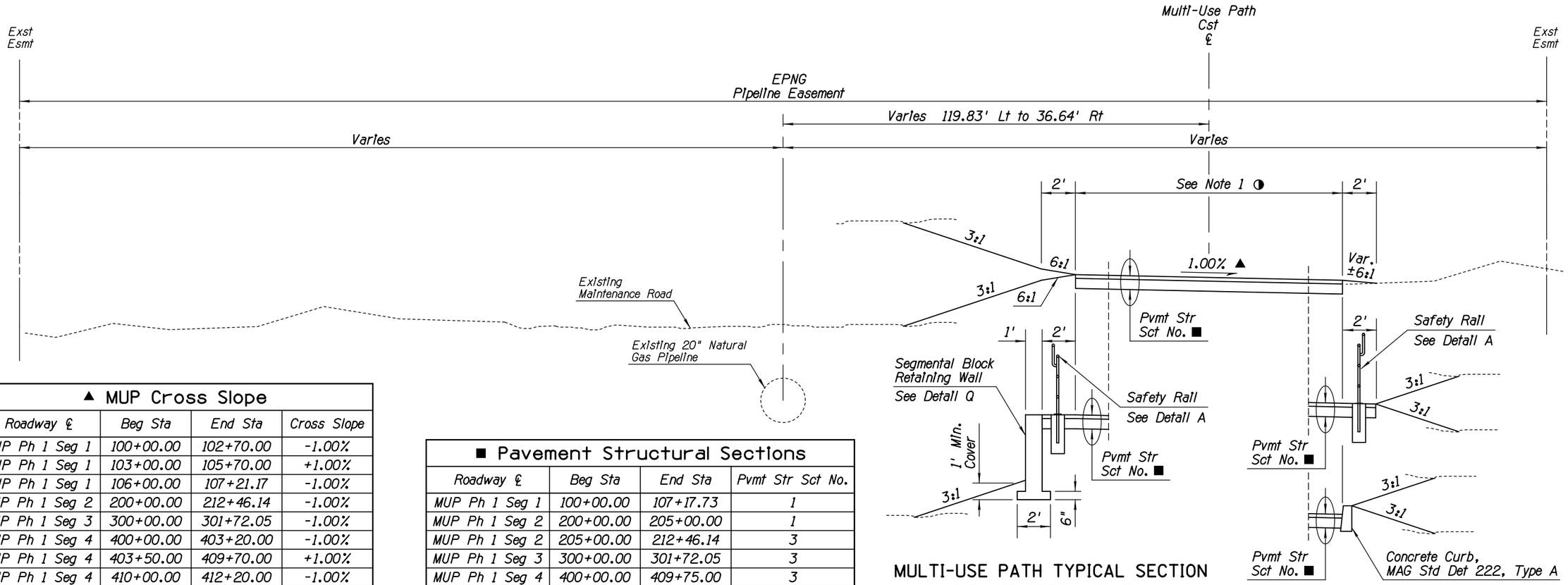

MULTI-USE PATH TYPICAL SECTION

Seg 1 Sta 100+00.00 to 107+17.73
Seg 2 Sta 200+00.00 to 212+46.14
Seg 3 Sta 300+00.00 to 301+72.05
Seg 4 Sta 400+00.00 to 419+42.70

▲ MUP Cross Slope

Roadway ℄	Beg Sta	End Sta	Cross Slope
MUP Ph 1 Seg 1	100+00.00	102+70.00	-1.00%
MUP Ph 1 Seg 1	103+00.00	105+70.00	+1.00%
MUP Ph 1 Seg 1	106+00.00	107+21.17	-1.00%
MUP Ph 1 Seg 2	200+00.00	212+46.14	-1.00%
MUP Ph 1 Seg 3	300+00.00	301+72.05	-1.00%
MUP Ph 1 Seg 4	400+00.00	403+20.00	-1.00%
MUP Ph 1 Seg 4	403+50.00	409+70.00	+1.00%
MUP Ph 1 Seg 4	410+00.00	412+20.00	-1.00%
MUP Ph 1 Seg 4	412+50.00	416+50.00	+1.00%
MUP Ph 1 Seg 4	416+80.00	418+85.00	-1.00%
MUP Ph 1 Seg 4	419+15.00	419+42.70	+1.00%

■ Pavement Structural Sections

Roadway ℄	Beg Sta	End Sta	Pvmt Str Sct No.
MUP Ph 1 Seg 1	100+00.00	107+17.73	1
MUP Ph 1 Seg 2	200+00.00	205+00.00	1
MUP Ph 1 Seg 2	205+00.00	212+46.14	3
MUP Ph 1 Seg 3	300+00.00	301+72.05	3
MUP Ph 1 Seg 4	400+00.00	409+75.00	3
MUP Ph 1 Seg 4	409+75.00	411+40.00	4
MUP Ph 1 Seg 4	411+40.00	415+00.00	3
MUP Ph 1 Seg 4	415+00.00	419+42.70	1

◑ MUP Pavement Width

Roadway ℄	Beg Sta	End Sta	Pavement Width
MUP Ph 1 Seg 1	100+00.00	102+25.00	10'
MUP Ph 1 Seg 1	102+85.00	104+15.00	14'
MUP Ph 1 Seg 1	104+75.00	107+21.17	10'
MUP Ph 1 Seg 2	200+00.00	212+46.14	10'
MUP Ph 1 Seg 3	300+00.00	304+72.05	10'
MUP Ph 1 Seg 4	400+00.00	412+80.00	10'
MUP Ph 1 Seg 4	413+10.00	414+04.00	11'
MUP Ph 1 Seg 4	414+34.00	415+63.00	12'
MUP Ph 1 Seg 4	416+23.00	419+42.70	10'

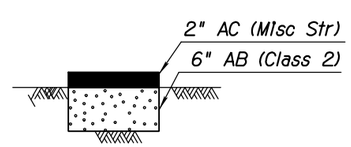

Total Thickness = 8"

PAVEMENT STRUCTURAL SECTION NO. 1

Multi-Use Path

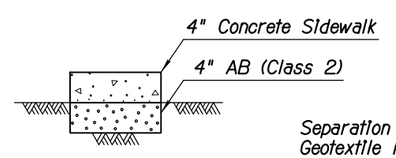

Total Thickness = 8"

PAVEMENT STRUCTURAL SECTION NO. 2

Switchback Path and Landings

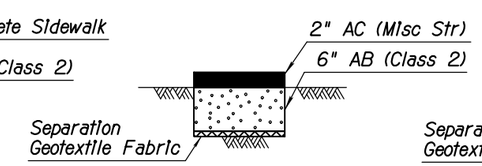

Total Thickness = 8"

PAVEMENT STRUCTURAL SECTION NO. 3

Multi-Use Path

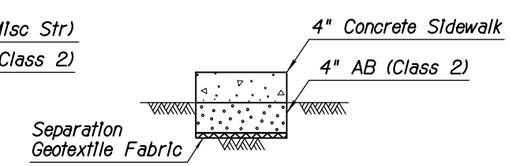

Total Thickness = 8"

PAVEMENT STRUCTURAL SECTION NO. 4

Multi-Use Path

NOTES:

1. For Additional Information, See Grading Tables on DWG NO. G1-2.02.
2. See Detail C for Retaining Wall Information & Limits.
3. See Plan Sheets for Curb, Safety Rail & Retaining Wall Locations.

	NAME	DATE
DESIGN	SMG	06/14
DRAWN	CPG	06/14
CHECKED	GPF	06/14

PARSONS BRINCKERHOFF

ARIZONA DEPARTMENT OF TRANSPORTATION
INTERMODAL TRANSPORTATION DIVISION
ROADWAY DESIGN SECTION

TYPICAL SECTION

ROUTE | LOCATION: PRESCOTT VALLEY PIPELINE & CENTRAL CORE MULTI-USE PATHS (PIPELINE PHASE 1)

Registered Professional Engineer (Civil) CERTIFICATE NO. 49430 GREGORY PATRICK FLY ARIZONA U.S.A. Expires 3/31/2015

DWG NO. G1 - 2.01

TRACS NO. SL680 01C | TEA-PRV-0(205)T | ___ OF ___

DATE- LOCATION- REVISIONS- FINISHED PLANS- SURVEY NO.

F.H.W.A. REGION	STATE	PROJECT NO.	SHEET NO.	TOTAL SHEETS	AS BUILT
9	ARIZ.	TEA-PRV-0(205)T			
		PRV 0000 YV			

MUP Grading - Lt Edge

Roadway ℄	Beg Sta	End Sta	End Condition
MUP Ph 1 Seg 1	100+00.00	103+05.00	Fill
MUP Ph 1 Seg 1	103+05.00	103+58.00	2' Grading
MUP Ph 1 Seg 1	103+58.00	104+03.00	Cut
MUP Ph 1 Seg 1	104+03.00	104+51.00	2' Grading
MUP Ph 1 Seg 1	104+51.00	105+44.00	Fill
MUP Ph 1 Seg 1	105+44.00	107+21.17	2' Grading
MUP Ph 1 Seg 2	200+00.00	201+00.00	Cut
MUP Ph 1 Seg 2	201+00.00	202+92.00	2' Grading
MUP Ph 1 Seg 2	202+92.00	204+71.00	Fill
MUP Ph 1 Seg 2	204+71.00	212+46.14	2' Grading
MUP Ph 1 Seg 3	300+00.00	301+72.05	2' Grading
MUP Ph 1 Seg 4	400+00.00	404+54.00	2' Grading
MUP Ph 1 Seg 4	404+54.00	404+84.00	Cut
MUP Ph 1 Seg 4	404+84.00	405+40.00	2' Grading
MUP Ph 1 Seg 4	405+40.00	406+46.00	Fill
MUP Ph 1 Seg 4	406+46.00	408+69.00	2' Grading
MUP Ph 1 Seg 4	408+69.00	409+78.75	Fill
MUP Ph 1 Seg 4	411+22.00	411+51.00	Cut
MUP Ph 1 Seg 4	411+51.00	411+84.00	2' Grading
MUP Ph 1 Seg 4	411+84.00	412+20.00	Fill
MUP Ph 1 Seg 4	412+20.00	413+15.00	2' Grading
MUP Ph 1 Seg 4	413+15.00	414+20.00	Fill
MUP Ph 1 Seg 4	415+68.00	416+18.00	Fill
MUP Ph 1 Seg 4	416+18.00	416+62.00	2' Grading
MUP Ph 1 Seg 4	416+62.00	416+82.00	Fill
MUP Ph 1 Seg 4	416+82.00	417+40.00	Cut
MUP Ph 1 Seg 4	417+40.00	419+42.70	Fill

MUP Grading - Rt Edge

Roadway ℄	Beg Sta	End Sta	End Condition
MUP Ph 1 Seg 1	100+00.00	101+74.00	2' Grading
MUP Ph 1 Seg 1	101+74.00	101+99.00	Cut
MUP Ph 1 Seg 1	101+99.00	102+53.00	2' Grading
MUP Ph 1 Seg 1	102+53.00	105+41.00	Fill
MUP Ph 1 Seg 1	105+41.00	107+21.17	2' Grading
MUP Ph 1 Seg 2	200+00.00	200+13.00	2' Grading
MUP Ph 1 Seg 2	200+13.00	201+05.00	Cut
MUP Ph 1 Seg 2	201+05.00	201+79.00	2' Grading
MUP Ph 1 Seg 2	201+79.00	204+07.00	Fill
MUP Ph 1 Seg 2	204+07.00	212+46.14	2' Grading
MUP Ph 1 Seg 3	300+00.00	301+72.05	2' Grading
MUP Ph 1 Seg 4	400+00.00	405+71.00	2' Grading
MUP Ph 1 Seg 4	405+71.00	406+10.00	Fill
MUP Ph 1 Seg 4	406+10.00	407+34.00	2' Grading
MUP Ph 1 Seg 4	407+34.00	408+91.00	Cut
MUP Ph 1 Seg 4	408+91.00	409+78.75	Fill
MUP Ph 1 Seg 4	411+22.00	411+68.00	2' Grading
MUP Ph 1 Seg 4	411+68.00	412+39.00	Fill
MUP Ph 1 Seg 4	412+39.00	412+91.00	2' Grading
MUP Ph 1 Seg 4	412+91.00	413+25.00	Cut
MUP Ph 1 Seg 4	415+75.00	416+20.00	Fill
MUP Ph 1 Seg 4	416+20.00	416+89.00	2' Grading
MUP Ph 1 Seg 4	416+89.00	417+33.00	Cut
MUP Ph 1 Seg 4	417+33.00	417+90.00	Fill

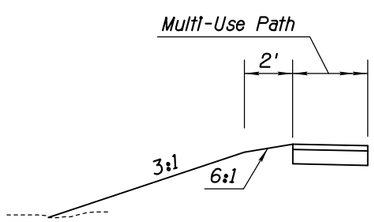

FILL CONDITION

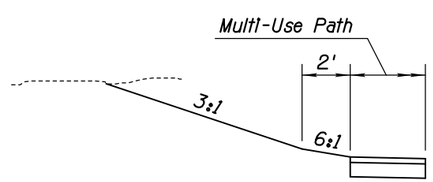

CUT CONDITION

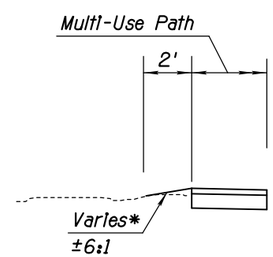

2' GRADING CONDITION

* Grade to Existing Ground for 2' from the Edge of Pavement (6:1 Max)

NOTES:

1. See Typical Sections on DWG NO. G1-2.01.
2. The Grading Tables Indicate Path Locations Containing No Curb, Safety Rail or Retaining Walls.

	NAME	DATE
DESIGN	SMG	06/14
DRAWN	CPG	06/14
CHECKED	GPF	06/14

PARSONS BRINCKERHOFF

ARIZONA DEPARTMENT OF TRANSPORTATION
INTERMODAL TRANSPORTATION DIVISION
ROADWAY DESIGN SECTION

TYPICAL SECTION

ROUTE | LOCATION PRESCOTT VALLEY PIPELINE & CENTRAL CORE MULTI-USE PATHS (PIPELINE PHASE 1)

Registered Professional Engineer (Civil) CERTIFICATE NO. 49430 GREGORY PATRICK FLY ARIZONA U.S.A. Expires 3/31/2015

DWG NO. G1 - 2.02

TRACS NO. SL680 01C | TEA-PRV-0(205)T | ___ OF ___

DATE- LOCATION- REVISIONS- FINISHED PLANS- SURVEY NO.

F.H.W.A. REGION	STATE	PROJECT NO.	SHEET NO.	TOTAL SHEETS	AS BUILT
9	ARIZ.	TEA-PRV-0(205)T			
		PRV 0000 YV			

CURB, CURB & GUTTER, AND SIDEWALK SUMMARY SHEET

DESCRIPTION		CURB				CURB AND GUTTER														SIDEWALK					
						TRANSITIONS																			
Location	Plan Reference No. XX	Type A, h=6" (Lin Ft) MAG Std Det 222	Type A, h=6" (Lin Ft) Std C-05.10	Med Nose Transition Std C-05.40	Median Paving (Pavers) (Sq Ft) Std C-05.40	Type 1 Std C-05.12 (Lin Ft)	Type 2 Std C-05.12 (Lin Ft)	Type 3 Std C-05.12 (Lin Ft)	Type 4 Std C-05.12 (Lin Ft)	Type 5 Std C-05.12	Type 6 Std C-05.12 (Each)	Type 9 Std C-05.12 (Each)	Detail N - C&G Transition (Each)	End Treatment C&G (Varies Width Gutter) Detail G (Lin ft)	Type B-1, h=6" (Lin Ft) Std C-05.10	Type C, h=3" (Lin Ft) Std C-05.10	Type D, h=6" (Lin Ft) Std C-05.10	Type G, h=6" (Lin Ft) Std C-05.10	Type D-1, h=6" (Lin Ft) Std C-05.10	Sidewalk Ramp Type A (Each) Detail C-05.30	Sidewalk Ramp Type B Each Detail C-05.30	Sidewalk Ramp Type C Each Std C-05.30	Sidewalk Ramp Type F Each Std C-05.30	Sidewalk (Sq Ft) Std C-05.20	Remarks
Sta 413+25.00 - Sta 415+75.00 Rt	1	250																							
Sheet Total		250																							

☐ Reference numbers correspond to numbers In Squares On Roadway Plans

	NAME	DATE
DESIGN	SMG	06/14
DRAWN	CPG	06/14
CHECKED	GPF	06/14

PARSONS BRINCKERHOFF

ARIZONA DEPARTMENT OF TRANSPORTATION
INTERMODAL TRANSPORTATION DIVISION
ROADWAY DESIGN SECTION

NEW CURB AND GUTTER SUMMARY SHEET

ROUTE | LOCATION PRESCOTT VALLEY PIPELINE & CENTRAL CORE MULTI-USE PATHS (PIPELINE PHASE 1)

Registered Professional Engineer (Civil) CERTIFICATE NO. 49430 GREGORY PATRICK FLY ARIZONA U.S.A. Expires 3/31/2015

DWG NO. G-3.01

TRACS NO. SL680 01C | TEA-PRV-0(205)T | ___ OF ___

DATE- LOCATION- REVISIONS- FINISHED PLANS- SURVEY NO.

NOTE:
THE ZEROS IN PARENTHESES (0, 0.0 & 0.000) INDICATE THE DIMENSIONAL PRECISION FOR THAT COLUMN

NOTE:
FOR PIPE CULVERT PLACEMENT SEE STANDARD DRAWINGS C-13.10 AND C-13.15

NOTE:
PIPE OPTIONS SELECTED ARE THOSE REQUIRED TO MEET MINIMUM SERVICE LIFE.
ALLOWABLE PIPE OPTIONS ARE INDICATED WITH THE LETTER 'X' IN THE SPACE. BLANK SPACES ARE NOT ALLOWABLE ALTERNATES.

CSP - CORRUGATED STEEL PIPE
CAP - CORRUGATED ALUMINUM PIPE
RCP - REINFORCED CONCRETE PIPE
NRCP - NON-REINFORCED CONCRETE PIPE
NRCIPCP - NON-REINFORCED CAST-IN-PLACE CONCRETE PIPE
CHDPEPP - CORRUGATED HIGH-DENSITY POLYETHYLENE PLASTIC PIPE

F.H.W.A. REGION	STATE	PROJECT NO.	SHEET NO.	TOTAL SHEETS	AS BUILT
9	ARIZ.	TEA-PRV-0(205)T			
		PRV 0000 YV			

DESCRIPTION							CSP									CAP			RCP		NRCP	NRCIPCP	CHDPEPP	END TREATMENT														QUANTITIES				
			In.	In.	Ft.	Degree	In.	Coating								In.						In.		Each														Cubic Yard				
																								End Section	Catch Basin, Manhole, Headwall & Junction Structure																	
																									Ea					Ft.		Grate	Ft.									
Station	Plan Reference Number	◒ Controlling Fill Height Range	Size, Corrugated	Size, Smooth	Length (0)	Skew (0)	◪ Corrugation	Wall Thickness (0.000)	Zinc	Bituminous Coated Zinc	Aluminum	Bituminous Coated Aluminum	◪ Corrugation	Wall Thickness (0.000)	Uncoated	Bituminous Coated	Class - Non-Trench	Class - Trench	Class	Minimum Wall Thickness (0)	AASHTO M-294 Type C	AASHTO M-294 Type S	C-13.20 & C-13.25 Detail	Pipe Collar	Standard or Detail	S-Single / D-Double	Location	H (0.0)	L Wing (0.0)	L 18" Slotted Drain (0)	L 24" Slotted Drain (0)	Type	Elevation (0.00)	Depth In.	Depth Ft.	L (0.0)	Inlet Depression C-15.10	Pipe Excavation (0)	Pipe Back-fill (0) C-13.15	Drainage Excavation (0)	Berm/Dike Embankment (0)	REMARKS
Seg 1 Sta 104+12	1	1	18		64.0																X	X	1		1	C-13.80												20	10			CONNECT TO EXISTING PIPE
Seg 2 Sta 212+10	2	1	18		84.0																X	X	2															26	12			REMOVE 49.3' EXST PIPE (LT)
Seg 4 Sta 409+98	3	2	18		67.0																X	X	2															30	10			
Seg 4 Sta 416+72	4	1	12		19.0																X	X	2															4	3			
Sheet Total																							7															80	35			

FILL HEIGHT RANGE TABLE (Ft.)

RANGE NO.		1	2	3	4	5	6	7	8	9	10	11	12
FILL	>	1	3	5	8	11	15	20	25	30	40	55	70
HEIGHT (Ft.)	≤	3	5	8	11	15	20	25	30	40	55	70	90

◒ SHOULD FIELD CONDITIONS VARY FROM THE RANGE INDICATED, CONTACT DESIGN FOR RE-EVALUATION OF PIPE DESIGN REQUIREMENTS.

◪ PIPE CORRUGATION			
A	2⅔x½	D	6x2
B	3x1	E	3x1 or 9x2½
C	9x2½		

	NAME	DATE
DESIGN	SMG	06/14
DRAWN	CPG	06/14
CHECKED	GPF	06/14

PARSONS BRINCKERHOFF

ARIZONA DEPARTMENT OF TRANSPORTATION
INTERMODAL TRANSPORTATION DIVISION
ROADWAY DESIGN SECTION

NEW PIPE SUMMARY SHEET

ROUTE | LOCATION PRESCOTT VALLEY PIPELINE & CENTRAL CORE MULTI-USE PATHS (PIPELINE PHASE 1)

Registered Professional Engineer (Civil) CERTIFICATE NO. 49430 GREGORY PATRICK FLY ARIZONA U.S.A. Expires 3/31/2015

DWG NO. G1-4.01

TRACS NO. SL680 01C | TEA-PRV-0(205)T | ____ OF ____

DATE- LOCATION- REVISIONS- FINISHED PLANS- SURVEY NO.

F.H.W.A. REGION	STATE	PROJECT NO.	SHEET NO.	TOTAL SHEETS	AS BUILT
9	ARIZ.	TEA-PRV-0(205)T			
		PRV 0000 YV			

CSP - CORRUGATED STEEL PIPE

Station	Plan Reference Number	◪ Controlling Fill Height Range	Size	Length In Place (0.0)	Skew (0)	Remove & Salvage End Section	Remove Headwall	Left (0.0)	Right (0.0)	Left (0)	Right (0)	Corrugation	Wall Thickness (0.000)	Zinc	Aluminum	Bituminous	Reset Salvaged End Section	New	Detail	Size, (In.) Manhole	Standard or Detail	S-Single / D-Double	Location	H (0.0)	L Wing (0.0)	L 18" Slotted Drain (0)	L 24" Slotted Drain (0)	Type	Elevation (0.00)	Depth	L (0.0)	Pipe Excavation (0)	Pipe Back-fill (0) C-13.15	Drainage Excavation (0)	Berm Embankment (0)	Dike Embankment (0)	REMARKS
	DESCRIPTION			In.	Ft.	Degree	Each	Ft.		CSP											END TREATMENT																QUANTITIES
								Remove Existing Pipe		Ft. Extend							In.				Each End Section C-13.25			Catch Basin, Manhole, Headwall & Junction Structure												Cubic Yard
																										Ft.		Grate Ft.									
																														In.	Ft.						
Seg 4 Sta 419+19	1	2	12	61.0					2.0		61.0	A	0.064					1														14	7				
Sheet Total																		1														14	7				

FILL HEIGHT RANGE TABLE (Ft.)													
RANGE NO.		1	2	3	4	5	6	7	8	9	10	11	12
FILL	>	1	3	5	8	11	15	20	25	30	40	55	70
HEIGHT (Ft.)	≤	3	5	8	11	15	20	25	30	40	55	70	90

◒ SHOULD FIELD CONDITIONS VARY FROM THE RANGE INDICATED, CONTACT DESIGN FOR RE-EVALUATION OF PIPE DESIGN REQUIREMENTS.

◪ PIPE CORRUGATION			
A	2⅔x½	D	6x2
B	3x1	E	3x1 or 9x2½
C	9x2½		

NOTE:
FOR PIPE CULVERT PLACEMENT SEE STANDARD DRAWINGS C-13.10 AND C-13.15

NOTE:
THE ZEROS IN PARENTHESES (0, 0.0 & 0.000) INDICATE THE DIMENSIONAL PRECISION FOR THAT COLUMN

	NAME	DATE
DESIGN	SMG	06/14
DRAWN	CPG	06/14
CHECKED	GPF	06/14

PARSONS BRINCKERHOFF

ARIZONA DEPARTMENT OF TRANSPORTATION
INTERMODAL TRANSPORTATION DIVISION
ROADWAY DESIGN SECTION

NEW CORRUGATED STEEL PIPE EXTENSIONS SUMMARY SHEET

ROUTE | LOCATION PRESCOTT VALLEY PIPELINE & CENTRAL CORE MULTI-USE PATHS (PIPELINE PHASE 1)

Registered Professional Engineer (Civil) CERTIFICATE NO. 49430 GREGORY PATRICK FLY ARIZONA U.S.A. Expires 3/31/2015

DWG NO. G1-4.02

TRACS NO. SL680 01C | TEA-PRV-0(205)T | ____ OF ____

DATE- LOCATION- REVISIONS- FINISHED PLANS- SURVEY NO.

9/12/2014 T:\Prescott_MUP\SL622_ph1\Drng\SL622_ps02.dgn

F.H.W.A. REGION	STATE	PROJECT NO.	SHEET NO.	TOTAL SHEETS	AS BUILT
9	ARIZ.	TEA-PRV-0(205)T			
		PRV 0000 YV			

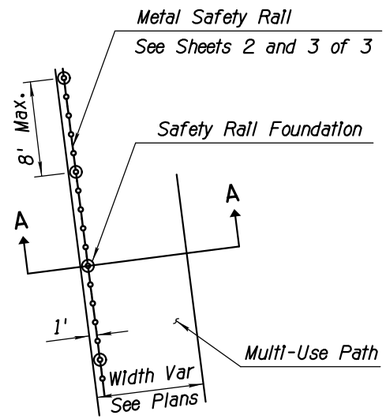

TYPICAL SAFETY RAIL LOCATION
PLAN VIEW
N.T.S.

SAFETY RAIL LOCATIONS					
Centerline	Begin Sta	End Sta	Offset	Length	Size*
Seg 4	409+78.75	411+22.00	6' Rt	141 LF	56"
Seg 4	409+78.75	411+22.00	6' Lt	145 LF	56"
Seg 4	414+20.00	415+68.00	8' Lt	148 LF	56"
Seg 4	417+90.00	419+40.86	6' Rt	151 LF	56"
Detail	-	-	Ramp Side	Length	Size*
C	-	-	Rt	1020 LF	42"
C	-	-	Lt	996 LF	42"

* See Sheets 2 and 3 of 3

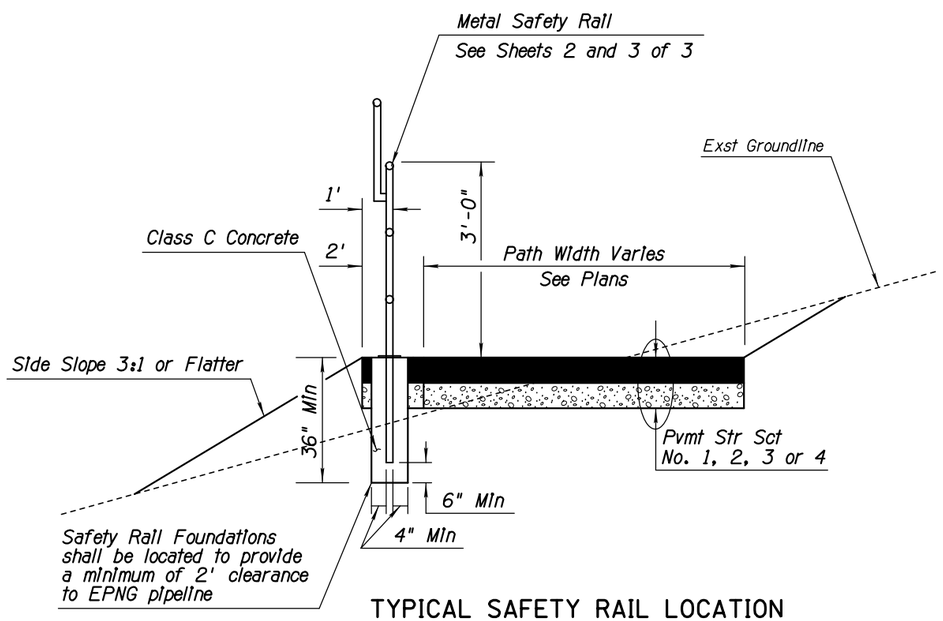

TYPICAL SAFETY RAIL LOCATION
SECTION A-A
N.T.S.

NOTES:

1. Paint Rail per ADOT Standard Specifications, Color Dunn Edwards "Hope Chest Brown" or approved equal.
2. See MAG Detail 145 for Additional Information
3. The Cost of the Safety Rail Concrete Foundation Is Included In ITEM 6110201 METAL HANDRAIL (42") and ITEM 6110202 METAL HANDRAIL (56").
4. See Sheets 2 of 3 and 3 of 3 for more Information on the Safety Rail.
5. See MAG Detail 145 Type 4 for Foundation Information

DETAIL A
SAFETY RAIL
SHEET 1 OF 3

	NAME	DATE
DESIGN	SMG	06/14
DRAWN	CPG	06/14
CHECKED	GPF	06/14

PARSONS BRINCKERHOFF

ARIZONA DEPARTMENT OF TRANSPORTATION
INTERMODAL TRANSPORTATION DIVISION
ROADWAY DESIGN SECTION

DETAIL SHEET
DETAIL A

Registered Professional Engineer (Civil) CERTIFICATE NO. 49430 GREGORY PATRICK FLY ARIZONA U.S.A. Expires 3/31/2015

ROUTE | LOCATION PRESCOTT VALLEY PIPELINE & CENTRAL CORE MULTI-USE PATHS (PIPELINE PHASE 1)

DWG NO. G1-5.01

TRACS NO. SL680 01C | TEA-PRV-0(205)T | ____ OF ____

DATE- LOCATION- REVISIONS- FINISHED PLANS- SURVEY NO.

F.H.W.A. REGION	STATE	PROJECT NO.	SHEET NO.	TOTAL SHEETS	AS BUILT
9	ARIZ.	TEA-PRV-0(205)T			
		PRV 0000 YV			

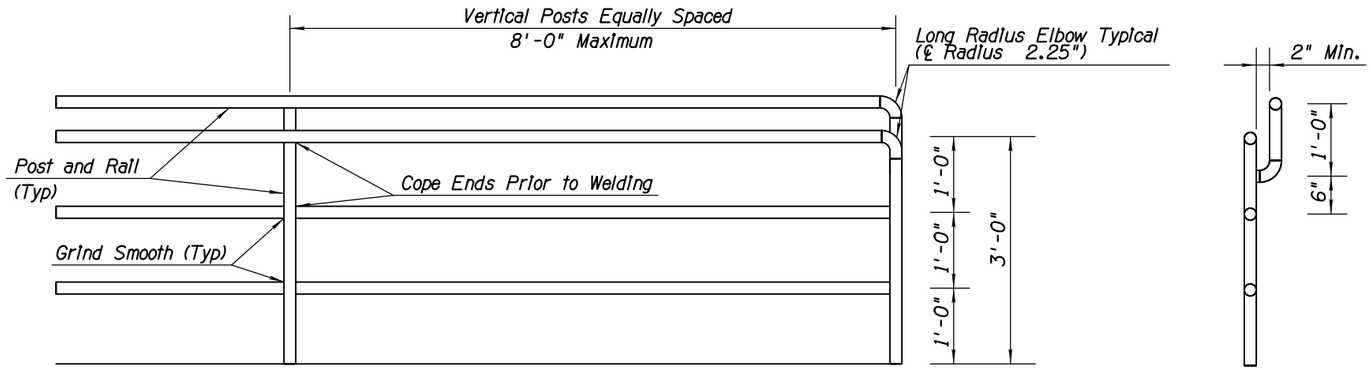

FRONT VIEW

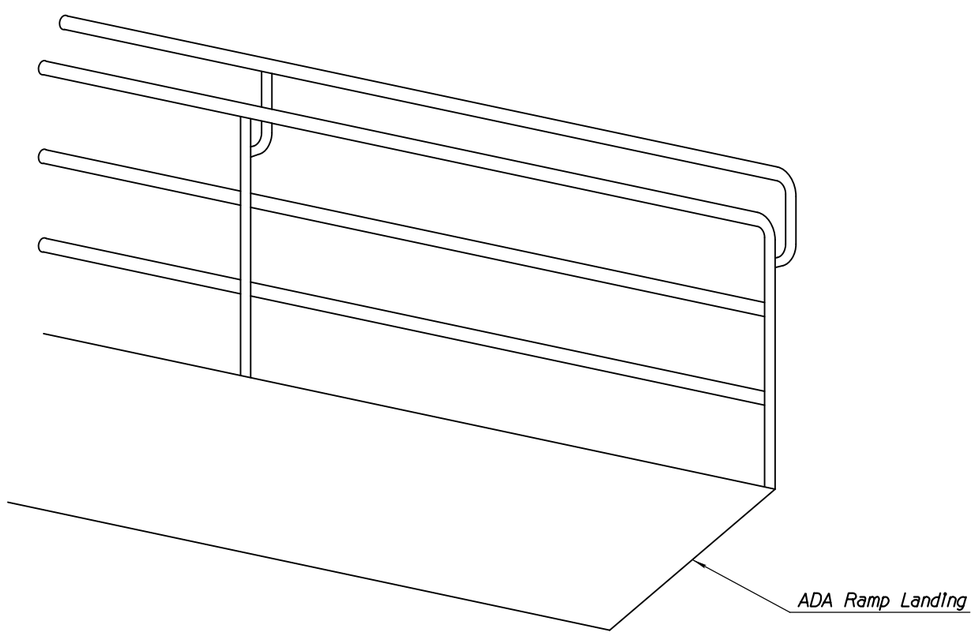

PERSPECTIVE VIEW

NOTES:

1. Posts and Rails shall be 1.5" Schedule 40 Steel Pipe ASTM A 53. Grade B (2.72 #/LF, 1.9" O.D.).
2. Paint Rail per ADOT Specifications
3. Vertical Posts to be evenly spaced.
4. Remove all sharp edges.
5. For Foundation Information use MAG Std Det 145 Type 4.
6. See MAG Standard Detail 145 for additional Information not shown.
7. Ramp handrails shall extend horizontally above the landing for 1 ft. beyond the top and bottom of ramp runs. Extensions shall return to the landing surface or shall be continuous to the handrail of an adjacent ramp run.

DETAIL A

42" SAFETY RAIL

SHEET 2 OF 3

	NAME	DATE
DESIGN	SMG	06/14
DRAWN	CPG	06/14
CHECKED	GPF	06/14

PARSONS BRINCKERHOFF

ARIZONA DEPARTMENT OF TRANSPORTATION
INTERMODAL TRANSPORTATION DIVISION
ROADWAY DESIGN SECTION

DETAIL SHEET
DETAIL A

Registered Professional Engineer (Civil) CERTIFICATE NO. 49430 GREGORY PATRICK FLY ARIZONA U.S.A. Expires 3/31/2015

ROUTE | LOCATION: PRESCOTT VALLEY PIPELINE & CENTRAL CORE MULTI-USE PATHS (PIPELINE PHASE 1)

DWG NO. GI-5.02

TRACS NO. SL680 01C | TEA-PRV-0(205)T | ___ OF ___

SURVEY NO. | FINISHED PLANS- | REVISIONS- | LOCATION- | DATE-

F.H.W.A. REGION	STATE	PROJECT NO.	SHEET NO.	TOTAL SHEETS	AS BUILT
9	ARIZ.	TEA-PRV-0(205)T			
		PRV 0000 YV			

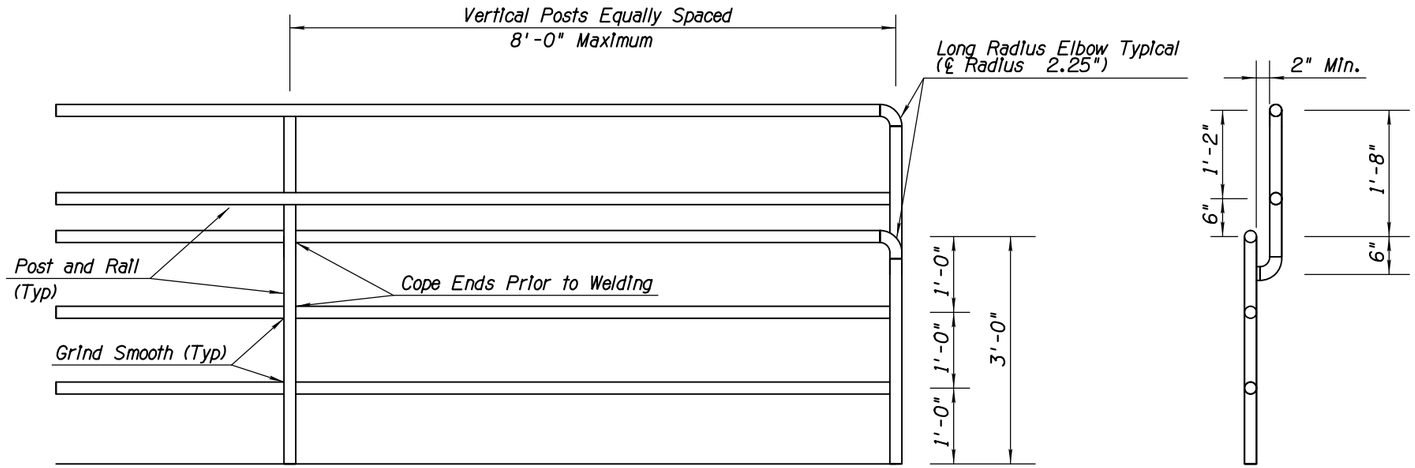

FRONT VIEW

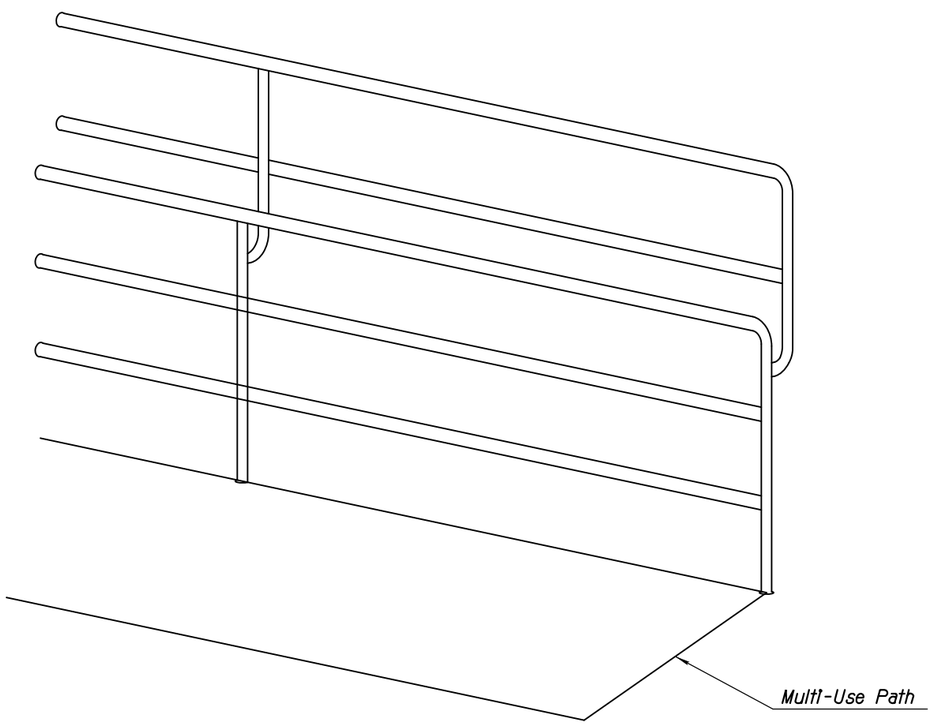

PERSPECTIVE VIEW

NOTES:

1. Posts and Rails shall be 1.5" Schedule 40 Steel Pipe ASTM A 53. Grade B (2.72 #/LF, 1.9" O.D.).
2. Paint Rail per ADOT Specifications
3. Vertical Posts to be evenly spaced.
4. Remove all sharp edges.
5. For Foundation Information use MAG Std Det 145 Type 4.
6. See MAG Standard Detail 145 for additional Information not shown.
7. Ramp handrails shall extend horizontally above the landing for 1 ft. beyond the top and bottom of ramp runs. Extensions shall return to the landing surface or shall be continuous to the handrail of an adjacent ramp run.

DETAIL A

56" SAFETY RAIL

SHEET 3 OF 3

	NAME	DATE
DESIGN	SMG	06/14
DRAWN	CPG	06/14
CHECKED	GPF	06/14

PARSONS BRINCKERHOFF

ARIZONA DEPARTMENT OF TRANSPORTATION
INTERMODAL TRANSPORTATION DIVISION
ROADWAY DESIGN SECTION

DETAIL SHEET
DETAIL A

ROUTE | LOCATION: PRESCOTT VALLEY PIPELINE & CENTRAL CORE MULTI-USE PATHS (PIPELINE PHASE 1)

Registered Professional Engineer (Civil) CERTIFICATE NO. 49450 GREGORY PATRICK FLY ARIZONA U.S.A. Expires 3/31/2015

DWG NO. G1-5.03

TRACS NO. SL680 01C | TEA-PRV-0(205)T | ____ OF ____

DATE- | LOCATION- | REVISIONS- | FINISHED PLANS- | SURVEY NO.

F.H.W.A. REGION	STATE	PROJECT NO.	SHEET NO.	TOTAL SHEETS	AS BUILT
9	ARIZ.	TEA-PRV-0(205)T			
		PRV 0000 YV			

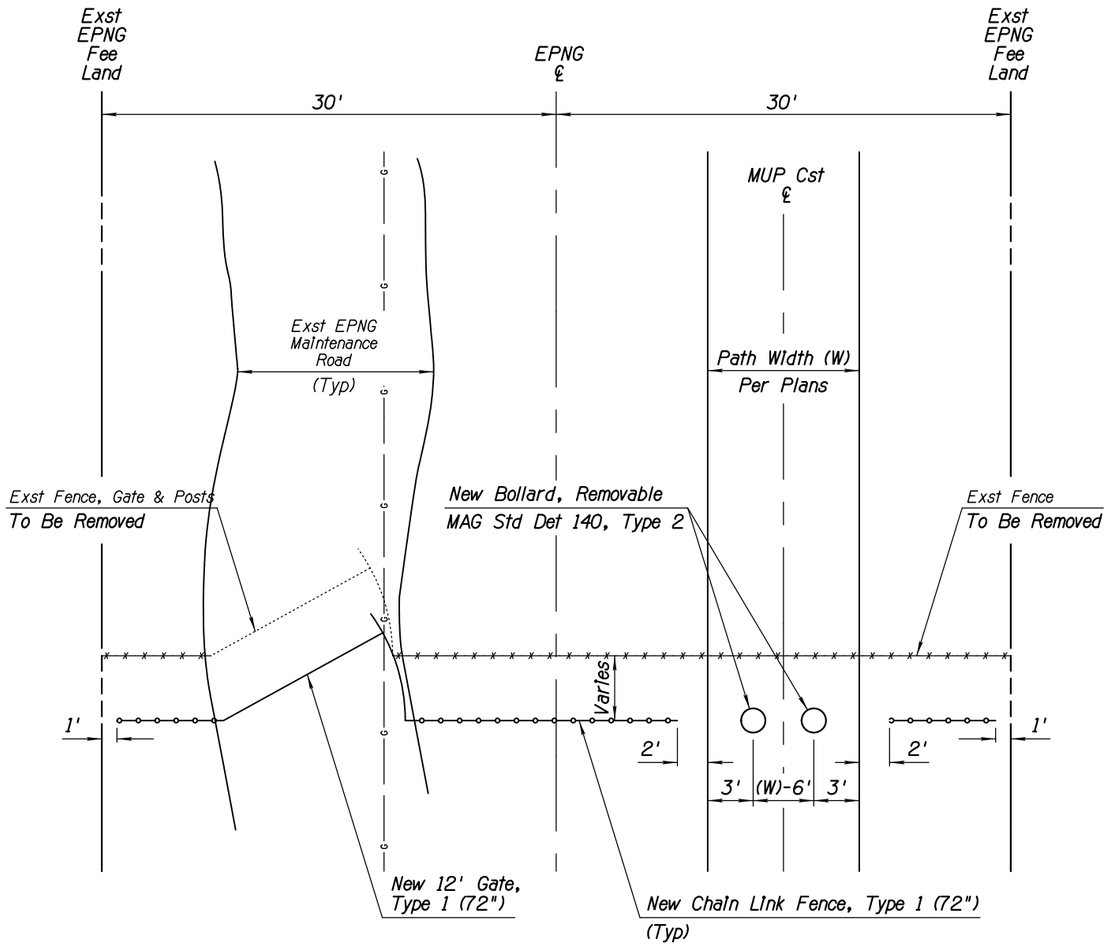

TYPICAL FENCE/GATE REMOVAL LOCATION
PLAN VIEW
N.T.S.

NOTES:

1. EPNG Gas Line Accessed Along Multi-Use Path Through Removable Bollards or Through New Chain Link Fence Gate.

FENCE/GATE INSTALLATION LOCATIONS							
Centerline	Exst Fence Sta	Remove Fence	Remove Gate	New Fence Sta	New Fence	New 12' Gate	New Bollard
Seg 2	200+69	45 LF	1 EA	200+65	32 LF	1 EA	2 EA
Seg 2	208+40	52 LF	1 EA	209+60	32 LF	1 EA	2 EA
Seg 4	400+41	45 LF	1 EA	400+40	32 LF	1 EA	2 EA
Seg 4	408+32	44 LF	1 EA	-	-	-	-
Seg 4	411+45	44 LF	1 EA	412+21	32 LF	1 EA	2 EA

DETAIL B

KMEL PASO FENCE TREATMENT

	NAME	DATE
DESIGN	SMG	06/14
DRAWN	CPG	06/14
CHECKED	GPF	06/14

ARIZONA DEPARTMENT OF TRANSPORTATION
INTERMODAL TRANSPORTATION DIVISION
ROADWAY DESIGN SECTION

PARSONS BRINCKERHOFF

DETAIL SHEET
DETAIL B

ROUTE | LOCATION PRESCOTT VALLEY PIPELINE & CENTRAL CORE MULTI-USE PATHS (PIPELINE PHASE 1)

Registered Professional Engineer (Civil) CERTIFICATE NO. 49450 GREGORY PATRICK FLY ARIZONA U.S.A.
Expires 3/31/2015

DWG NO. G1-5.04

TRACS NO. SL680 01C | TEA-PRV-0(205)T | ____ OF ____

9/12/2014 T:\Prescott_MUP\SL622_ph1\DATA\SL622_dtb.dgn

F.H.W.A. REGION	STATE	PROJECT NO.	SHEET NO.	TOTAL SHEETS	AS BUILT
9	ARIZ.	TEA-PRV-0(205)T			
		PRV 0000 YV			

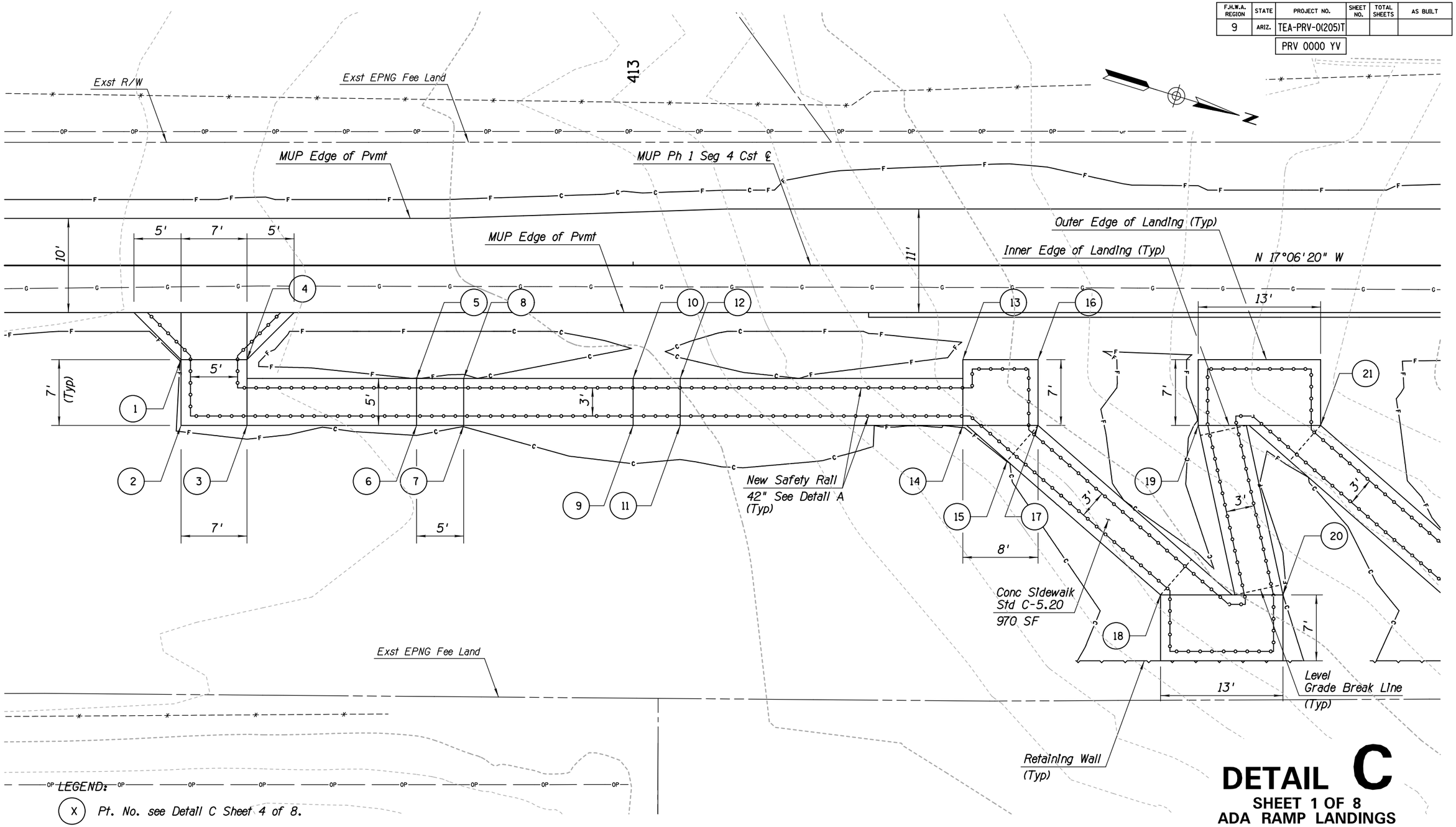

DETAIL C

SHEET 1 OF 8
ADA RAMP LANDINGS

LEGEND:

(X) Pt. No. see Detail C Sheet 4 of 8.

NOTES:

1. See Detail E for Additional ADA Ramp Landing Information.
2. See Detail C Sheet 4 for Landing Horizontal Control Information.
3. See Detail C Sheet 5 for Retaining Wall Information.

NOTE:
Caution, EPNG high pressure natural gas line present. EPNG Supervisor should be contacted at 928-527-6535 a minimum of 72 hours prior to any construction activities inside EPNG property.

	NAME	DATE
DESIGN	SMG	06/14
DRAWN	CPG	06/14
CHECKED	GPF	06/14

PARSONS BRINCKERHOFF

ARIZONA DEPARTMENT OF TRANSPORTATION
INTERMODAL TRANSPORTATION DIVISION
ROADWAY DESIGN SECTION

DETAIL SHEET
DETAIL C

ROUTE | LOCATION: PRESCOTT VALLEY PIPELINE & CENTRAL CORE MULTI-USE PATHS (PIPELINE PHASE 1)

Registered Professional Engineer (Civil) CERTIFICATE NO. 49430 GREGORY PATRICK FLY ARIZONA U.S.A. Expires 3/31/2015

DWG NO. G1-5.05

TRACS NO. SL680 01C | TEA-PRV-0(205)T | ___ OF ___

DATE- LOCATION- REVISIONS- FINISHED PLANS- SURVEY NO.

9/12/2014 T:\Prescott_MUP\SL622_ph1\DATA\SL622_dtc01.dgn

F.H.W.A. REGION	STATE	PROJECT NO.	SHEET NO.	TOTAL SHEETS	AS BUILT
9	ARIZ.	TEA-PRV-0(205)T			
		PRV 0000 YV			

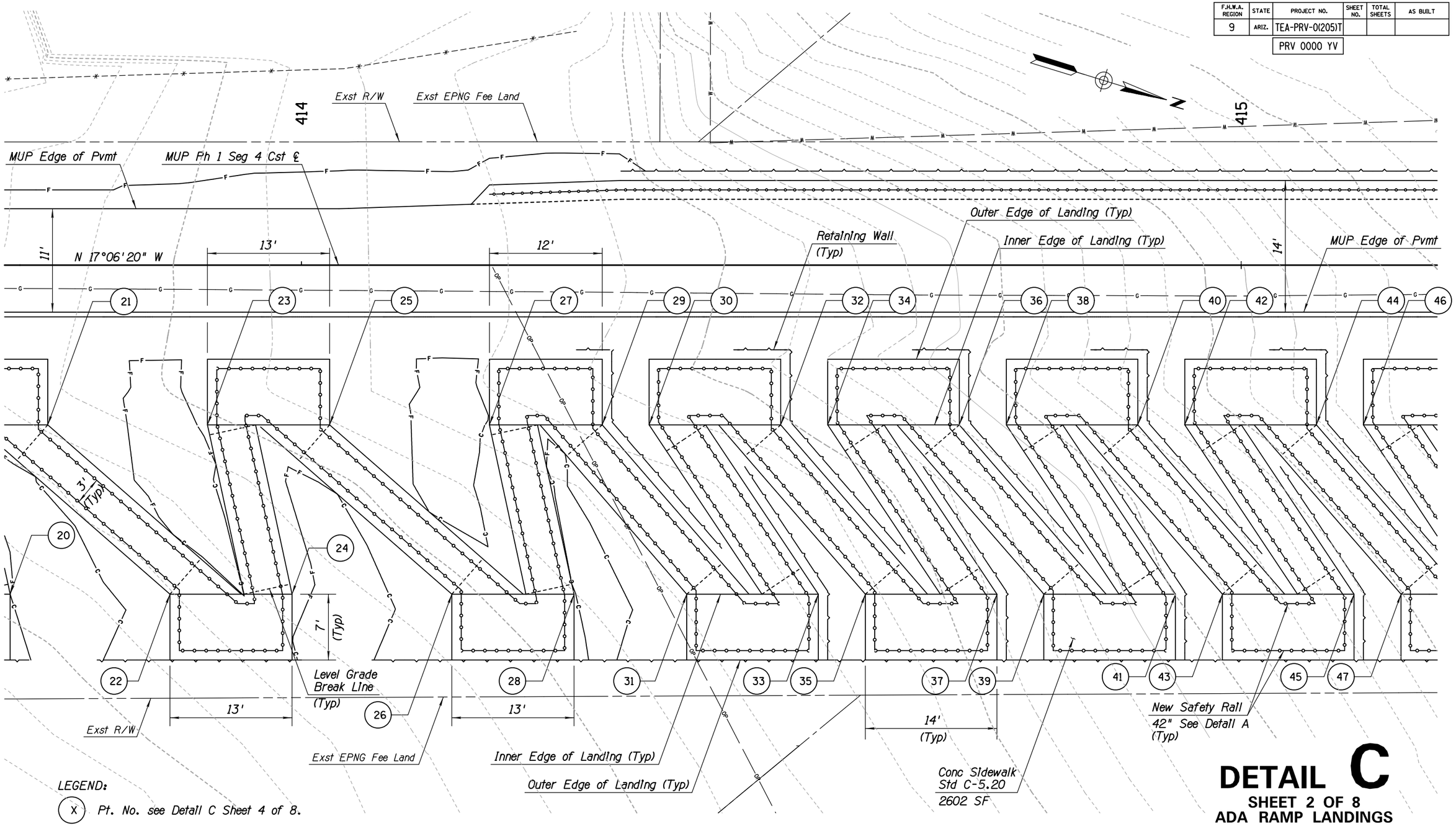

DETAIL C

SHEET 2 OF 8
ADA RAMP LANDINGS

LEGEND:

(X) Pt. No. see Detail C Sheet 4 of 8.

NOTES:

1. See Detail E for Additional Ramp Landing Information.
2. See Detail C Sheet 4 for Landing Horizontal Control Information.
3. See Detail C Sheet 6 for Retaining Wall Information.

NOTE:
Caution, EPNG high pressure natural gas line present. EPNG Supervisor should be contacted at 928-527-6535 a minimum of 72 hours prior to any construction activities inside EPNG property.

	NAME	DATE
DESIGN	SMG	06/14
DRAWN	CPG	06/14
CHECKED	GPF	06/14

PARSONS BRINCKERHOFF

ARIZONA DEPARTMENT OF TRANSPORTATION
INTERMODAL TRANSPORTATION DIVISION
ROADWAY DESIGN SECTION

DETAIL SHEET
DETAIL C

ROUTE | LOCATION: PRESCOTT VALLEY PIPELINE & CENTRAL CORE MULTI-USE PATHS (PIPELINE PHASE 1)

Registered Professional Engineer (Civil) CERTIFICATE NO. 49430 GREGORY PATRICK FLY ARIZONA U.S.A. Expires 3/31/2015

DWG NO. G1-5.06

TRACS NO. SL680 01C | TEA-PRV-0(205)T | ___ OF ___

DATE- LOCATION- REVISIONS- FINISHED PLANS- SURVEY NO.

F.H.W.A. REGION	STATE	PROJECT NO.	SHEET NO.	TOTAL SHEETS	AS BUILT
9	ARIZ.	TEA-PRV-0(205)T			
		PRV 0000 YV			

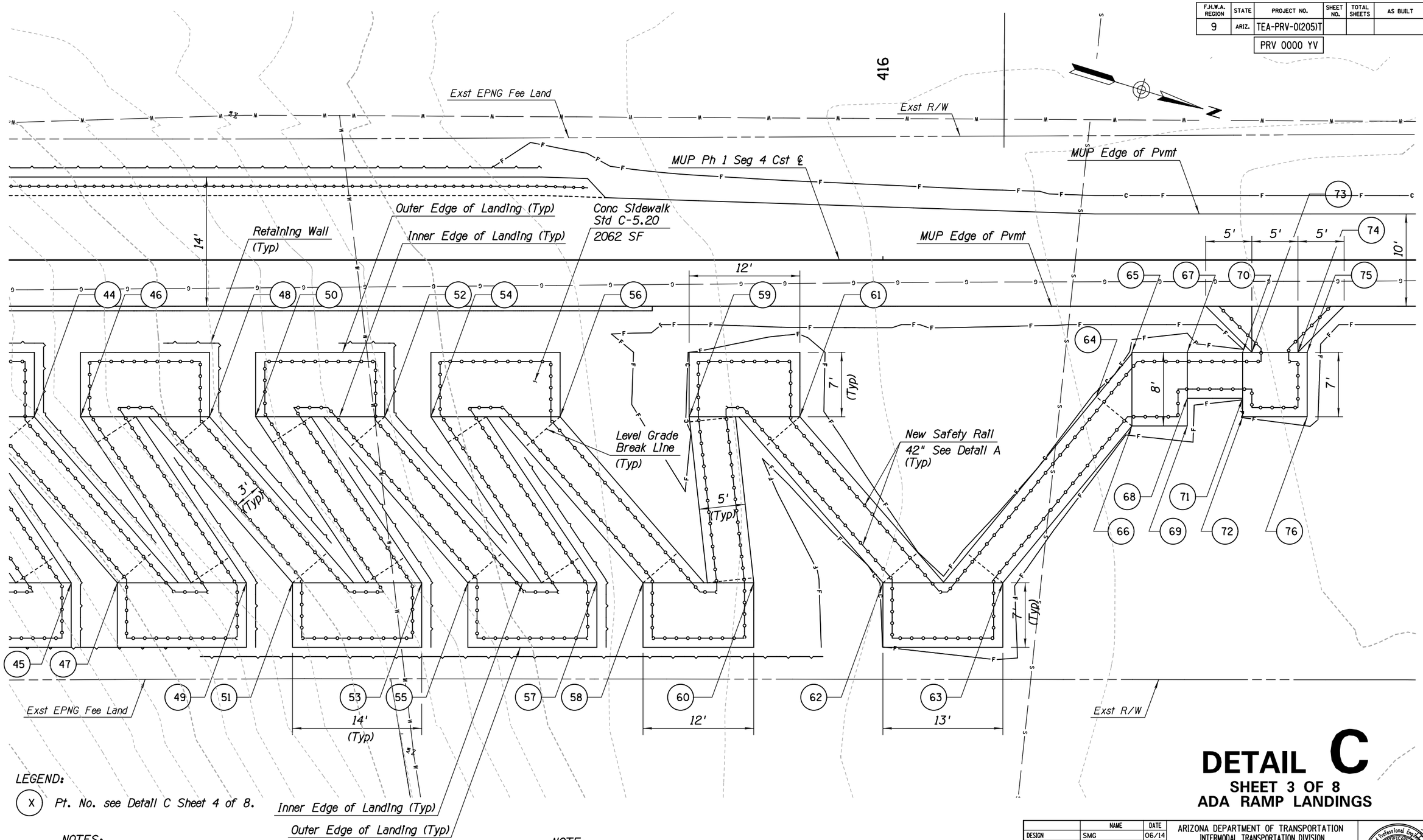

DETAIL C

SHEET 3 OF 8
ADA RAMP LANDINGS

LEGEND:

(X) Pt. No. see Detail C Sheet 4 of 8.

NOTES:

1. See Detail E for Additional Ramp Landing Information.
2. See Detail C Sheet 4 for Landing Horizontal Control Information.
3. See Detail C Sheet 8 for Retaining Wall Information.

NOTE:

Caution, EPNG high pressure natural gas line present. EPNG Supervisor should be contacted at 928-527-6535 a minimum of 72 hours prior to any construction activities inside EPNG property.

	NAME	DATE
DESIGN	SMG	06/14
DRAWN	CPG	06/14
CHECKED	GPF	06/14

PARSONS BRINCKERHOFF

ARIZONA DEPARTMENT OF TRANSPORTATION
INTERMODAL TRANSPORTATION DIVISION
ROADWAY DESIGN SECTION

DETAIL SHEET
DETAIL C

ROUTE | LOCATION: PRESCOTT VALLEY PIPELINE & CENTRAL CORE MULTI-USE PATHS (PIPELINE PHASE 1)

Registered Professional Engineer (Civil) CERTIFICATE NO. 49430 GREGORY PATRICK FLY ARIZONA U.S.A. Expires 3/31/2015

DWG NO. G1-5.07

TRACS NO. SL680 01C | TEA-PRV-0(205)T | ____ OF ____

DATE- LOCATION- REVISIONS- FINISHED PLANS- SURVEY NO.

9/12/2014 T:\Prescott_MUP\SL622_ph1\DATA\SL622_dtc03.dgn

F.H.W.A. REGION	STATE	PROJECT NO.	SHEET NO.	TOTAL SHEETS	AS BUILT
9	ARIZ.	TEA-PRV-0(205)T			
		PRV 0000 YV			

DATE- LOCATION- REVISIONS- FINISHED PLANS- SURVEY NO.

HORIZONTAL CONTROL

Point No.	Reference Roadway Cst ℄	Station	Offset	Elevation
1	MUP Ph 1 Seg 4 Cst ℄	412+52.00	10' Rt	4991.70
2	MUP Ph 1 Seg 4 Cst ℄	412+52.00	17' Rt	4991.70
3	MUP Ph 1 Seg 4 Cst ℄	412+59.00	17' Rt	4991.66
4	MUP Ph 1 Seg 4 Cst ℄	412+59.00	10' Rt	4991.66
5	MUP Ph 1 Seg 4 Cst ℄	412+77.00	12' Rt	4990.31
6	MUP Ph 1 Seg 4 Cst ℄	412+77.00	17' Rt	4990.31
7	MUP Ph 1 Seg 4 Cst ℄	412+82.00	17' Rt	4990.30
8	MUP Ph 1 Seg 4 Cst ℄	412+82.00	12' Rt	4990.30
9	MUP Ph 1 Seg 4 Cst ℄	413+00.00	17' Rt	4988.95
10	MUP Ph 1 Seg 4 Cst ℄	413+00.00	12' Rt	4988.95
11	MUP Ph 1 Seg 4 Cst ℄	413+05.00	17' Rt	4988.94
12	MUP Ph 1 Seg 4 Cst ℄	413+05.00	12' Rt	4988.94
13	MUP Ph 1 Seg 4 Cst ℄	413+35.00	10' Rt	4986.44
14	MUP Ph 1 Seg 4 Cst ℄	413+35.00	17' Rt	4986.44
15	MUP Ph 1 Seg 4 Cst ℄	413+39.71	20.77' Rt	4986.43
16	MUP Ph 1 Seg 4 Cst ℄	413+43.00	10' Rt	4986.43
17	MUP Ph 1 Seg 4 Cst ℄	413+43.00	17' Rt	4986.43
18	MUP Ph 1 Seg 4 Cst ℄	413+56.00	35' Rt	4984.64
19	MUP Ph 1 Seg 4 Cst ℄	413+60.00	17' Rt	4983.20
20	MUP Ph 1 Seg 4 Cst ℄	413+69.00	35' Rt	4984.64
21	MUP Ph 1 Seg 4 Cst ℄	413+73.00	17' Rt	4983.20
22	MUP Ph 1 Seg 4 Cst ℄	413+86.00	35' Rt	4982.18
23	MUP Ph 1 Seg 4 Cst ℄	413+90.00	17' Rt	4980.74
24	MUP Ph 1 Seg 4 Cst ℄	413+99.00	35' Rt	4982.18
25	MUP Ph 1 Seg 4 Cst ℄	414+03.00	17' Rt	4980.74
26	MUP Ph 1 Seg 4 Cst ℄	414+16.00	35' Rt	4978.94
27	MUP Ph 1 Seg 4 Cst ℄	414+20.00	17' Rt	4977.50
28	MUP Ph 1 Seg 4 Cst ℄	414+29.00	35' Rt	4978.94
29	MUP Ph 1 Seg 4 Cst ℄	414+32.00	17' Rt	4977.50
30	MUP Ph 1 Seg 4 Cst ℄	414+37.00	17' Rt	4975.14
31	MUP Ph 1 Seg 4 Cst ℄	414+41.00	35' Rt	4976.66
32	MUP Ph 1 Seg 4 Cst ℄	414+51.00	17' Rt	4975.14
33	MUP Ph 1 Seg 4 Cst ℄	414+55.00	35' Rt	4976.66
34	MUP Ph 1 Seg 4 Cst ℄	414+56.00	17' Rt	4972.00
35	MUP Ph 1 Seg 4 Cst ℄	414+60.00	35' Rt	4973.52
36	MUP Ph 1 Seg 4 Cst ℄	414+70.00	17' Rt	4972.00
37	MUP Ph 1 Seg 4 Cst ℄	414+74.00	35' Rt	4973.52
38	MUP Ph 1 Seg 4 Cst ℄	414+75.00	17' Rt	4968.86

HORIZONTAL CONTROL

Point No.	Reference Roadway Cst ℄	Station	Offset	Elevation
39	MUP Ph 1 Seg 4 Cst ℄	414+79.00	35' Rt	4970.38
40	MUP Ph 1 Seg 4 Cst ℄	414+89.00	17' Rt	4968.86
41	MUP Ph 1 Seg 4 Cst ℄	414+93.00	35' Rt	4970.38
42	MUP Ph 1 Seg 4 Cst ℄	414+94.00	17' Rt	4965.72
43	MUP Ph 1 Seg 4 Cst ℄	414+98.00	35' Rt	4967.24
44	MUP Ph 1 Seg 4 Cst ℄	415+08.00	17' Rt	4965.72
45	MUP Ph 1 Seg 4 Cst ℄	415+12.00	35' Rt	4967.24
46	MUP Ph 1 Seg 4 Cst ℄	415+13.00	17' Rt	4962.58
47	MUP Ph 1 Seg 4 Cst ℄	415+17.00	35' Rt	4964.10
48	MUP Ph 1 Seg 4 Cst ℄	415+27.00	17' Rt	4962.58
49	MUP Ph 1 Seg 4 Cst ℄	415+31.00	35' Rt	4964.10
50	MUP Ph 1 Seg 4 Cst ℄	415+32.00	17' Rt	4959.44
51	MUP Ph 1 Seg 4 Cst ℄	415+36.00	35' Rt	4960.96
52	MUP Ph 1 Seg 4 Cst ℄	415+46.00	17' Rt	4959.44
53	MUP Ph 1 Seg 4 Cst ℄	415+50.00	35' Rt	4960.96
54	MUP Ph 1 Seg 4 Cst ℄	415+51.00	17' Rt	4956.30
55	MUP Ph 1 Seg 4 Cst ℄	415+55.00	35' Rt	4957.82
56	MUP Ph 1 Seg 4 Cst ℄	415+65.00	17' Rt	4956.30
57	MUP Ph 1 Seg 4 Cst ℄	415+69.00	35' Rt	4957.82
58	MUP Ph 1 Seg 4 Cst ℄	415+74.00	35' Rt	4954.68
59	MUP Ph 1 Seg 4 Cst ℄	415+79.00	17' Rt	4953.22
60	MUP Ph 1 Seg 4 Cst ℄	415+86.00	35' Rt	4954.68
61	MUP Ph 1 Seg 4 Cst ℄	415+91.00	17' Rt	4953.22
62	MUP Ph 1 Seg 4 Cst ℄	416+00.00	35' Rt	4951.90
63	MUP Ph 1 Seg 4 Cst ℄	416+13.00	35' Rt	4951.90
64	MUP Ph 1 Seg 4 Cst ℄	416+23.14	14.82' Rt	4950.79
65	MUP Ph 1 Seg 4 Cst ℄	416+27.00	10' Rt	4950.79
66	MUP Ph 1 Seg 4 Cst ℄	416+27.00	18' Rt	4950.79
67	MUP Ph 1 Seg 4 Cst ℄	416+33.00	10' Rt	4950.73
68	MUP Ph 1 Seg 4 Cst ℄	416+33.00	15' Rt	4950.73
69	MUP Ph 1 Seg 4 Cst ℄	416+33.00	18' Rt	4950.73
70	MUP Ph 1 Seg 4 Cst ℄	416+39.00	10' Rt	4950.23
71	MUP Ph 1 Seg 4 Cst ℄	416+39.00	15' Rt	4950.23
72	MUP Ph 1 Seg 4 Cst ℄	416+39.00	17' Rt	4950.23
73	MUP Ph 1 Seg 4 Cst ℄	416+40.00	10' Rt	4950.23
74	MUP Ph 1 Seg 4 Cst ℄	416+45.00	10' Rt	4950.22
75	MUP Ph 1 Seg 4 Cst ℄	416+46.00	10' Rt	4950.22
76	MUP Ph 1 Seg 4 Cst ℄	416+46.00	17' Rt	4950.22

DETAIL C

SHEET 4 OF 8

ADA RAMP LANDINGS

	NAME	DATE
DESIGN	SMG	06/14
DRAWN	CPG	06/14
CHECKED	GPF	06/14

PARSONS BRINCKERHOFF

ARIZONA DEPARTMENT OF TRANSPORTATION
INTERMODAL TRANSPORTATION DIVISION
ROADWAY DESIGN SECTION

DETAIL SHEET
DETAIL C

ROUTE | LOCATION PRESCOTT VALLEY PIPELINE & CENTRAL CORE MULTI-USE PATHS (PIPELINE PHASE 1)

Registered Professional Engineer (Civil) CERTIFICATE NO. 49450 GREGORY PATRICK FLY ARIZONA U.S.A. Expires 3/31/2015

DWG NO. G1-5.08

TRACS NO. SL680 01C | TEA-PRV-0(205)T | ___ OF ___

F.H.W.A. REGION	STATE	PROJECT NO.	SHEET NO.	TOTAL SHEETS	AS BUILT
9	ARIZ.	TEA-PRV-0(205)T			
		PRV 0000 YV			

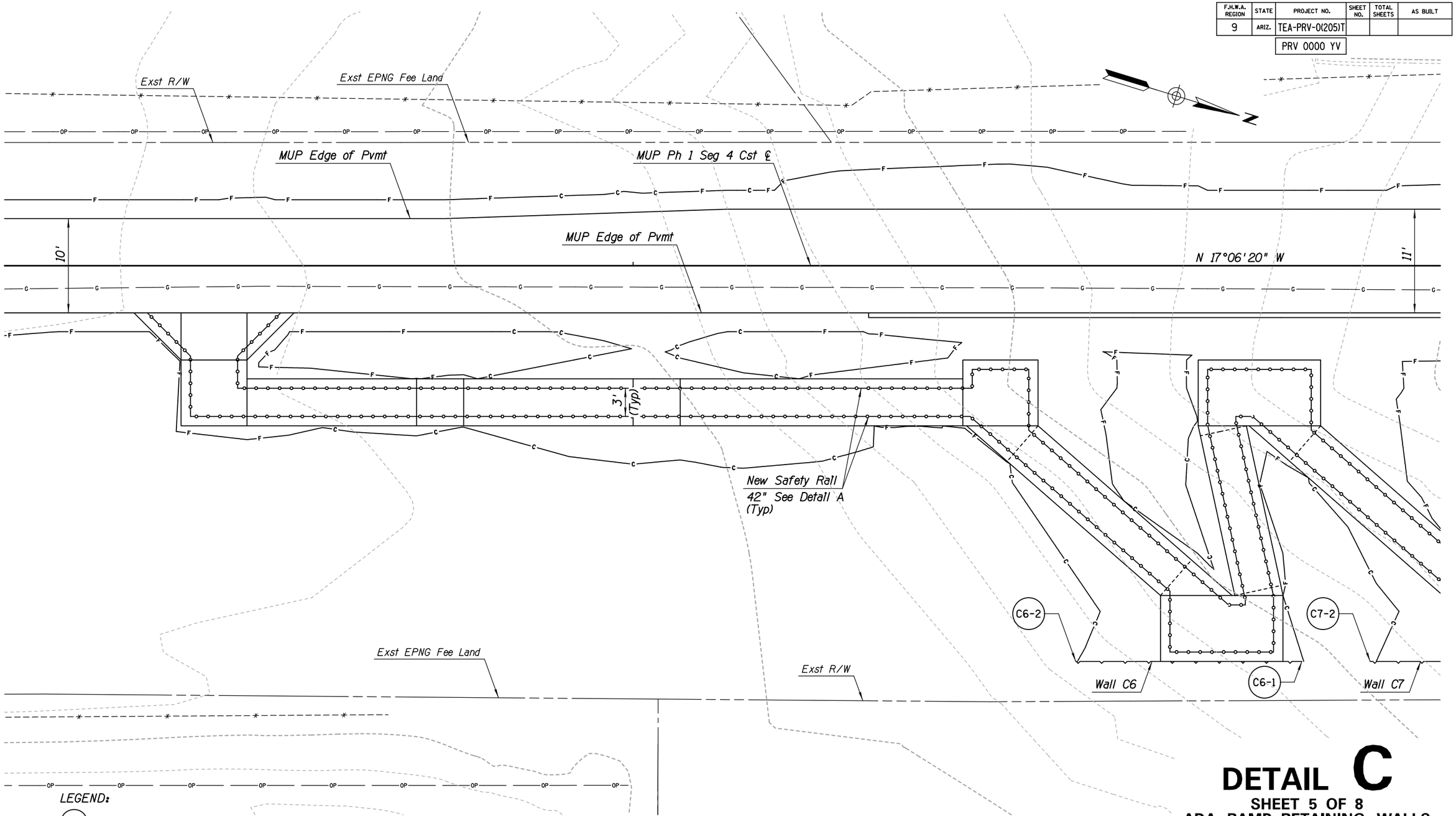

DETAIL C

SHEET 5 OF 8
ADA RAMP RETAINING WALLS

LEGEND:

(X) Pt. No. see Detail C Sheet 8 of 8.

NOTES:

1. See Detail C Sheet 8 for Retaining Wall Horizontal Control Information.
2. See DWG NO. S1-1.01 to S-1.35 for Retaining Wall Profiles.
3. See Detail Q for Additional Retaining Wall Information.

NOTE:
Caution, EPNG high pressure natural gas line present. EPNG Supervisor should be contacted at 928-527-6535 a minimum of 72 hours prior to any construction activities inside EPNG property.

	NAME	DATE
DESIGN	SMG	06/14
DRAWN	CPG	06/14
CHECKED	GPF	06/14

PARSONS BRINCKERHOFF

ARIZONA DEPARTMENT OF TRANSPORTATION
INTERMODAL TRANSPORTATION DIVISION
ROADWAY DESIGN SECTION

DETAIL SHEET
DETAIL C

ROUTE | LOCATION: PRESCOTT VALLEY PIPELINE & CENTRAL CORE MULTI-USE PATHS (PIPELINE PHASE 1)

Registered Professional Engineer (Civil) CERTIFICATE NO. 49450 GREGORY PATRICK FLY ARIZONA U.S.A.
Expires 3/31/2015

DWG NO. G1-5.09

TRACS NO. SL680 01C | TEA-PRV-0(205)T | ____ OF ____

DATE- LOCATION- REVISIONS- FINISHED PLANS- SURVEY NO.

F.H.W.A. REGION	STATE	PROJECT NO.	SHEET NO.	TOTAL SHEETS	AS BUILT
9	ARIZ.	TEA-PRV-0(205)T			
		PRV 0000 YV			

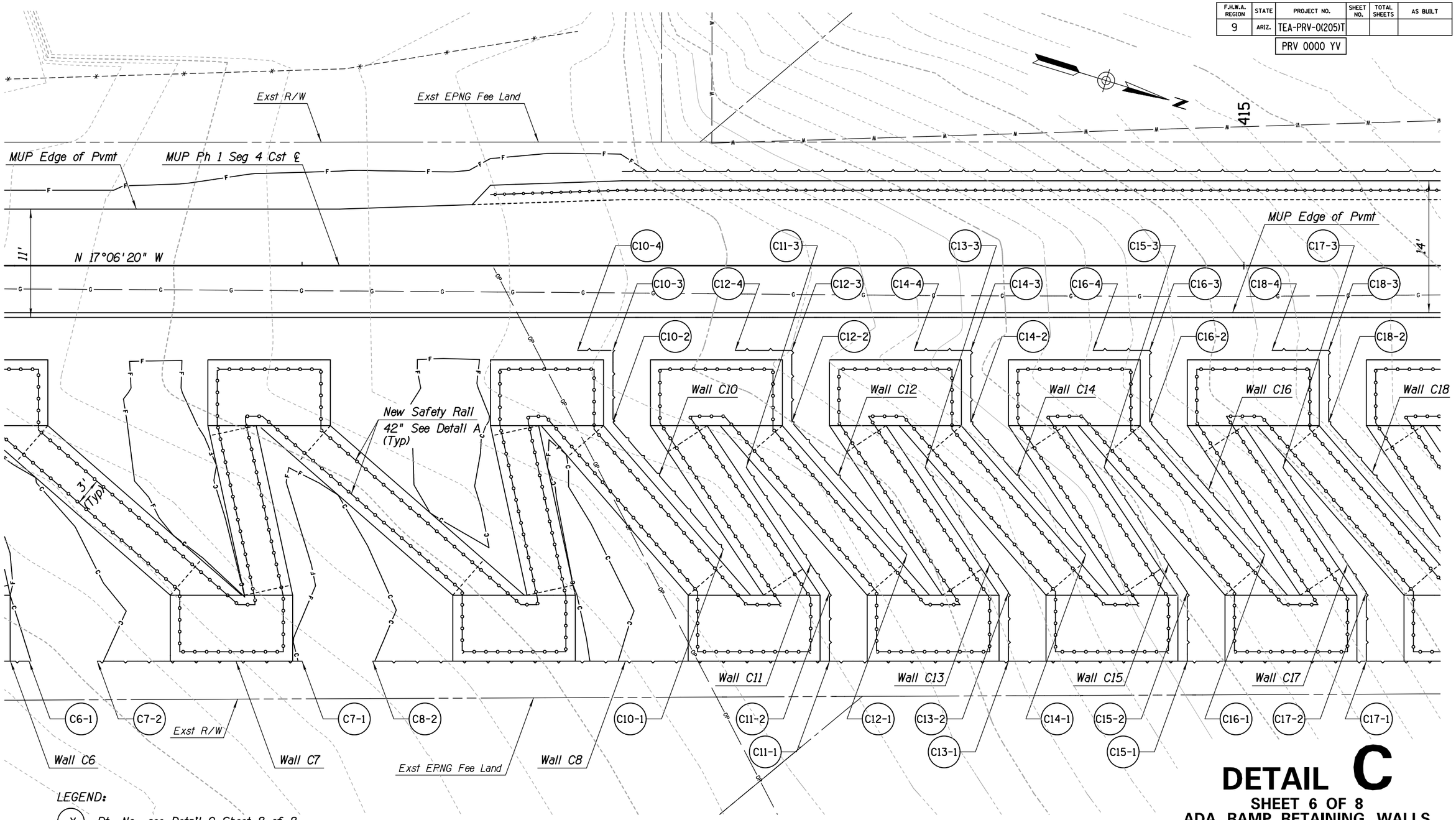

DETAIL C

SHEET 6 OF 8
ADA RAMP RETAINING WALLS

LEGEND:

(X) Pt. No. see Detail C Sheet 8 of 8.

NOTES:

1. See Detail C Sheet 8 for Retaining Wall Horizontal Control Information.
2. See DWG NO. S1-1.01 to S1-1.35 for Retaining Wall Profiles.
3. See Detail Q for Additional Retaining Wall Information.

NOTE:
Caution, EPNG high pressure natural gas line present. EPNG Supervisor should be contacted at 928-527-6535 a minimum of 72 hours prior to any construction activities inside EPNG property.

	NAME	DATE
DESIGN	SMG	06/14
DRAWN	CPG	06/14
CHECKED	GPF	06/14

PARSONS BRINCKERHOFF

ARIZONA DEPARTMENT OF TRANSPORTATION
INTERMODAL TRANSPORTATION DIVISION
ROADWAY DESIGN SECTION

DETAIL SHEET
DETAIL C

ROUTE | LOCATION: PRESCOTT VALLEY PIPELINE & CENTRAL CORE MULTI-USE PATHS (PIPELINE PHASE 1)

Registered Professional Engineer (Civil) CERTIFICATE NO. 49430 GREGORY PATRICK FLY ARIZONA U.S.A. Expires 3/31/2015

DWG NO. G1-5.10

TRACS NO. SL680 01C | TEA-PRV-0(205)T | ____ OF ____

DATE- LOCATION- REVISIONS- FINISHED PLANS- SURVEY NO.

F.H.W.A. REGION	STATE	PROJECT NO.	SHEET NO.	TOTAL SHEETS	AS BUILT
9	ARIZ.	TEA-PRV-0(205)T			
		PRV 0000 YV			

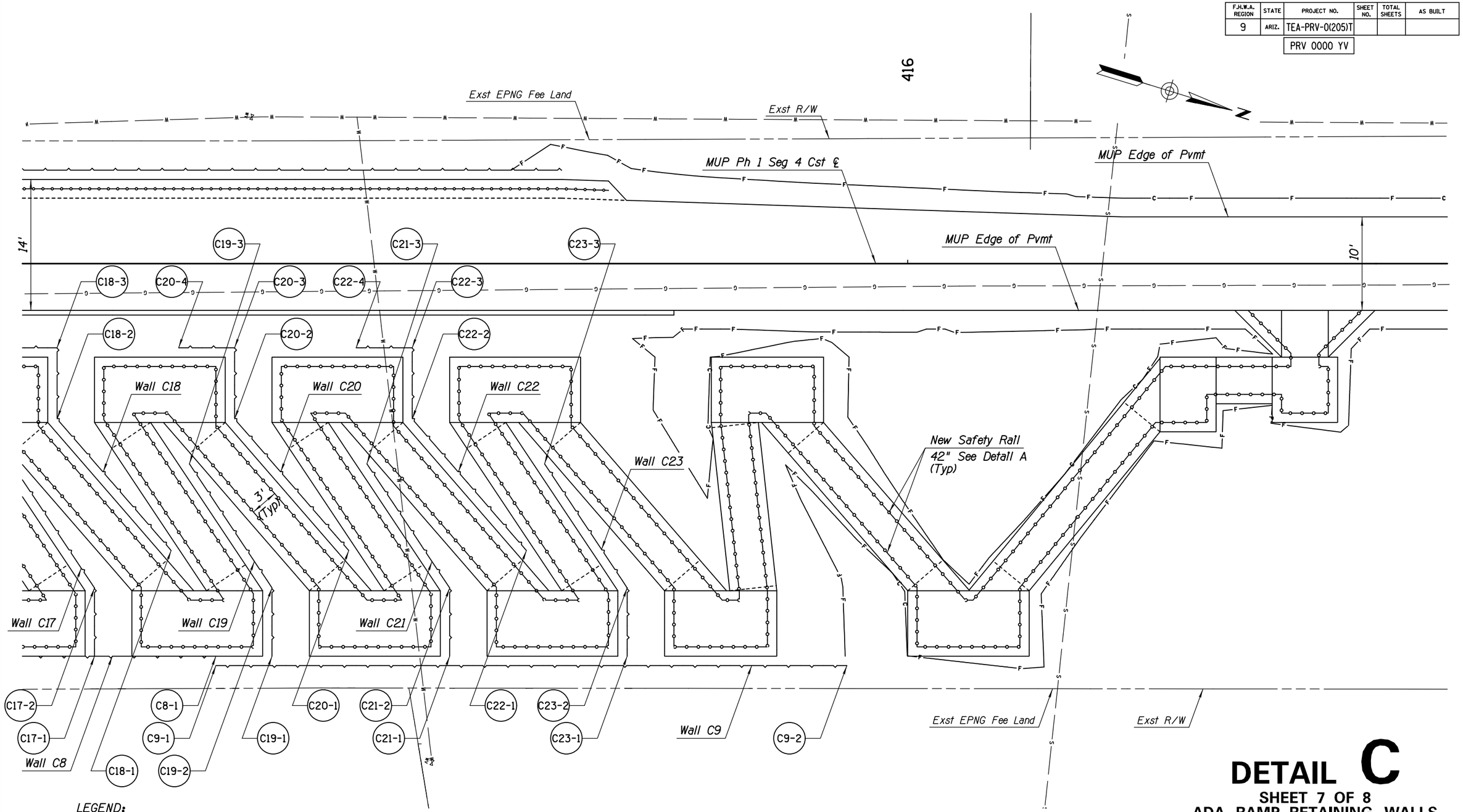

DETAIL C

SHEET 7 OF 8
ADA RAMP RETAINING WALLS

LEGEND:

(X) Pt. No. see Detail C Sheet 8 of 8.

NOTES:

1. See Detail C Sheet 8 for Retaining Wall Horizontal Control Information
2. See DWG NO. S1-1.01 to S1-1.35 for Retaining Wall Profiles.
3. See Detail Q for Additional Retaining Wall Information.

NOTE:

Caution, EPNG high pressure natural gas line present. EPNG Supervisor should be contacted at 928-527-6535 a minimum of 72 hours prior to any construction activities inside EPNG property.

	NAME	DATE
DESIGN	SMG	06/14
DRAWN	CPG	06/14
CHECKED	GPF	06/14

PARSONS BRINCKERHOFF

ARIZONA DEPARTMENT OF TRANSPORTATION
INTERMODAL TRANSPORTATION DIVISION
ROADWAY DESIGN SECTION

DETAIL SHEET
DETAIL C

ROUTE | LOCATION: PRESCOTT VALLEY PIPELINE & CENTRAL CORE MULTI-USE PATHS (PIPELINE PHASE 1)

Registered Professional Engineer (Civil) CERTIFICATE NO. 49430 GREGORY PATRICK FLY ARIZONA U.S.A. Expires 3/31/2015

DWG NO. G1-5.11

TRACS NO. SL680 01C | TEA-PRV-0(205)T | ____ OF ____

DATE- LOCATION- REVISIONS- FINISHED PLANS- SURVEY NO.

F.H.W.A. REGION	STATE	PROJECT NO.	SHEET NO.	TOTAL SHEETS	AS BUILT
9	ARIZ.	TEA-PRV-0(205)T			
		PRV 0000 YV			

HORIZONTAL RETAINING WALL CONTROL

Wall	Point No.	Reference Roadway Cst ℄	Station	Offset	TOW Elevation
C6	C6-1	MUP Ph 1 Seg 4 Cst ℄	413+71.00	42' Rt	4985.89
	C6-2	MUP Ph 1 Seg 4 Cst ℄	413+47.00	42' Rt	4987.90
C7	C7-1	MUP Ph 1 Seg 4 Cst ℄	414+00.00	42' Rt	4983.22
	C7-2	MUP Ph 1 Seg 4 Cst ℄	413+78.25	42' Rt	4984.90
C8	C8-1	MUP Ph 1 Seg 4 Cst ℄	415+26.00	42' Rt	4965.15
	C8-2	MUP Ph 1 Seg 4 Cst ℄	414+07.50	42' Rt	4981.90
C9	C9-1	MUP Ph 1 Seg 4 Cst ℄	415+26.00	43' Rt	4964.11
	C9-2	MUP Ph 1 Seg 4 Cst ℄	415+93.50	43' Rt	4954.73
C10	C10-1	MUP Ph 1 Seg 4 Cst ℄	414+44.72	30.13' Rt	4977.51
	C10-2	MUP Ph 1 Seg 4 Cst ℄	414+33.00	16.63' Rt	4977.51
	C10-3	MUP Ph 1 Seg 4 Cst ℄	414+33.00	9' Rt	4977.51
	C10-4	MUP Ph 1 Seg 4 Cst ℄	414+29.25	9' Rt	4977.51
C11	C11-1	MUP Ph 1 Seg 4 Cst ℄	414+56.00	42' Rt	4976.67
	C11-2	MUP Ph 1 Seg 4 Cst ℄	414+56.00	34.70' Rt	4976.67
	C11-3	MUP Ph 1 Seg 4 Cst ℄	414+47.16	21.43' Rt	4976.00
C12	C12-1	MUP Ph 1 Seg 4 Cst ℄	414+64.21	30.69' Rt	4975.15
	C12-2	MUP Ph 1 Seg 4 Cst ℄	414+52.00	16.63' Rt	4975.15
	C12-3	MUP Ph 1 Seg 4 Cst ℄	414+52.00	9' Rt	4975.15
	C12-4	MUP Ph 1 Seg 4 Cst ℄	414+46.00	9' Rt	4975.15
C13	C13-1	MUP Ph 1 Seg 4 Cst ℄	414+75.00	42' Rt	4973.53
	C13-2	MUP Ph 1 Seg 4 Cst ℄	414+75.00	34.70' Rt	4973.53
	C13-3	MUP Ph 1 Seg 4 Cst ℄	414+66.16	21.43' Rt	4972.86
C14	C14-1	MUP Ph 1 Seg 4 Cst ℄	414+83.21	30.69' Rt	4972.01
	C14-2	MUP Ph 1 Seg 4 Cst ℄	414+71.00	16.63' Rt	4972.01
	C14-3	MUP Ph 1 Seg 4 Cst ℄	414+71.00	9' Rt	4972.01
	C14-4	MUP Ph 1 Seg 4 Cst ℄	414+65.00	9' Rt	4972.01
C15	C15-1	MUP Ph 1 Seg 4 Cst ℄	414+94.00	42' Rt	4970.39
	C15-2	MUP Ph 1 Seg 4 Cst ℄	414+94.00	34.70' Rt	4970.39
	C15-3	MUP Ph 1 Seg 4 Cst ℄	414+85.16	21.43' Rt	4969.72

HORIZONTAL RETAINING WALL CONTROL

Wall	Point No.	Reference Roadway Cst ℄	Station	Offset	TOW Elevation
C16	C16-1	MUP Ph 1 Seg 4 Cst ℄	415+02.21	30.69' Rt	4968.87
	C16-2	MUP Ph 1 Seg 4 Cst ℄	414+90.00	16.63' Rt	4968.87
	C16-3	MUP Ph 1 Seg 4 Cst ℄	414+90.00	9' Rt	4968.87
	C16-4	MUP Ph 1 Seg 4 Cst ℄	414+84.00	9' Rt	4968.87
C17	C17-1	MUP Ph 1 Seg 4 Cst ℄	415+13.00	42' Rt	4967.25
	C17-2	MUP Ph 1 Seg 4 Cst ℄	415+13.00	34.70' Rt	4967.25
	C17-3	MUP Ph 1 Seg 4 Cst ℄	415+04.16	21.43' Rt	4966.58
C18	C18-1	MUP Ph 1 Seg 4 Cst ℄	415+21.21	30.69' Rt	4965.73
	C18-2	MUP Ph 1 Seg 4 Cst ℄	415+0900	16.63' Rt	4965.73
	C18-3	MUP Ph 1 Seg 4 Cst ℄	415+09.00	9' Rt	4965.73
	C18-4	MUP Ph 1 Seg 4 Cst ℄	415+03.00	9' Rt	4965.73
C19	C19-1	MUP Ph 1 Seg 4 Cst ℄	415+32.00	42' Rt	4964.11
	C19-2	MUP Ph 1 Seg 4 Cst ℄	415+32.00	34.70' Rt	4964.11
	C19-3	MUP Ph 1 Seg 4 Cst ℄	415+23.16	21.43' Rt	4963.44
C20	C20-1	MUP Ph 1 Seg 4 Cst ℄	415+40.21	30.69' Rt	4962.59
	C20-2	MUP Ph 1 Seg 4 Cst ℄	415+28.00	16.63' Rt	4962.59
	C20-3	MUP Ph 1 Seg 4 Cst ℄	415+28.00	9' Rt	4962.59
	C20-4	MUP Ph 1 Seg 4 Cst ℄	415+22.00	9' Rt	4962.59
C21	C21-1	MUP Ph 1 Seg 4 Cst ℄	415+51.00	42' Rt	4960.97
	C21-2	MUP Ph 1 Seg 4 Cst ℄	415+51.00	34.70' Rt	4960.97
	C21-3	MUP Ph 1 Seg 4 Cst ℄	415+42.16	21.43' Rt	4960.30
C22	C22-1	MUP Ph 1 Seg 4 Cst ℄	415+59.21	30.69' Rt	4959.45
	C22-2	MUP Ph 1 Seg 4 Cst ℄	415+47.00	16.63' Rt	4959.45
	C22-3	MUP Ph 1 Seg 4 Cst ℄	415+47.00	9' Rt	4959.45
	C22-4	MUP Ph 1 Seg 4 Cst ℄	415+41.00	9' Rt	4959.45
C23	C23-1	MUP Ph 1 Seg 4 Cst ℄	415+70.00	42' Rt	4957.83
	C23-2	MUP Ph 1 Seg 4 Cst ℄	415+70.00	34.70' Rt	4957.83
	C23-3	MUP Ph 1 Seg 4 Cst ℄	415+61.16	21.43' Rt	4957.16

DETAIL C

SHEET 8 OF 8
ADA RAMP RETAINING WALLS

NOTES:

1. See DWG NO. S1-1.01 to S1-1.35 for Retaining Wall Profiles.
2. See Detail Q for Additional Retaining Wall Information.

	NAME	DATE
DESIGN	SMG	06/14
DRAWN	CPG	06/14
CHECKED	GPF	06/14

PARSONS BRINCKERHOFF

ARIZONA DEPARTMENT OF TRANSPORTATION
INTERMODAL TRANSPORTATION DIVISION
ROADWAY DESIGN SECTION

DETAIL SHEET
DETAIL C

Registered Professional Engineer (Civil) CERTIFICATE NO. 49430 GREGORY PATRICK FLY ARIZONA U.S.A.
Expires 3/31/2015

ROUTE | LOCATION PRESCOTT VALLEY PIPELINE & CENTRAL CORE MULTI-USE PATHS (PIPELINE PHASE 1)

DWG NO. G1-5.12

TRACS NO. SL680 01C | TEA-PRV-0(205)T | ___ OF ___

DATE- LOCATION- REVISIONS- FINISHED PLANS- SURVEY NO.

F.H.W.A. REGION	STATE	PROJECT NO.	SHEET NO.	TOTAL SHEETS	AS BUILT
9	ARIZ.	TEA-PRV-0(205)T			
		PRV 0000 YV			

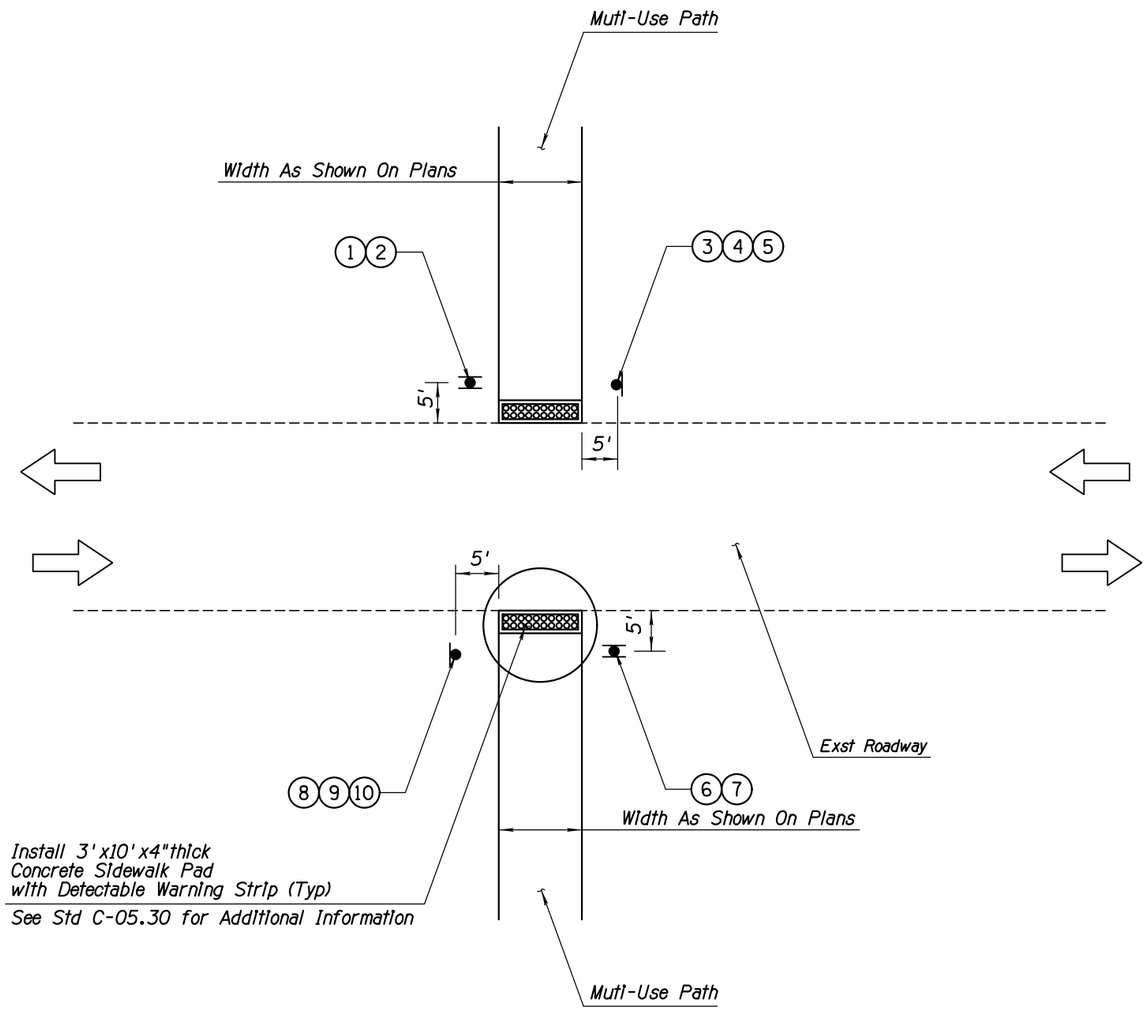

TYPICAL PATH CROSSING
PLAN VIEW
N.T.S.

NOTES:

1. See the Sign Summary Sheet for Additional Information.
2. The Configuration Shown Represents a Typical Application Where the Path Crosses an Existing Street, Utilizing MUTCD Figure 9B-7. Field Modifications Permitted as Approved by the Engineer.
3. See Plan Sheets for Locations.

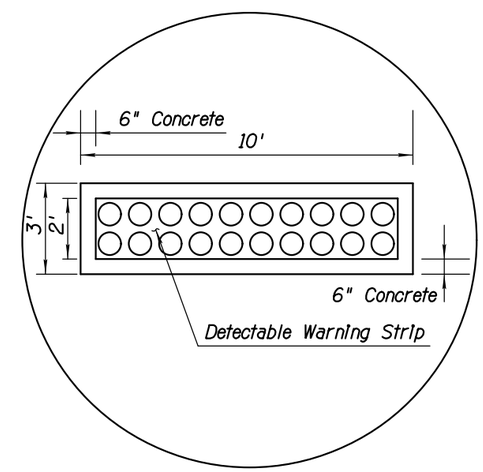

LEGEND:

(X) - Sign Number (See Sign Summary Sheets)

---- - Existing Pavement

—— - New Path

DETAIL D

TYPICAL PATH CROSSING AT STREETS

	NAME	DATE
DESIGN	SMG	06/14
DRAWN	CPG	06/14
CHECKED	GPF	06/14

PARSONS BRINCKERHOFF

ARIZONA DEPARTMENT OF TRANSPORTATION
INTERMODAL TRANSPORTATION DIVISION
ROADWAY DESIGN SECTION

DETAIL SHEET
DETAIL D

ROUTE | LOCATION PRESCOTT VALLEY PIPELINE & CENTRAL CORE MULTI-USE PATHS (PIPELINE PHASE 1)

Registered Professional Engineer (Civil) CERTIFICATE NO. 49450 GREGORY PATRICK FLY ARIZONA U.S.A. Expires 3/31/2015

DWG NO. G1-5.13

TRACS NO. SL680 01C | TEA-PRV-0(205)T | ___ OF ___

DATE- LOCATION- REVISIONS- FINISHED PLANS- SURVEY NO.

9/12/2014 T:\Prescott_MUP\SL622_ph1\DATA\SL622_dtd.dgn

F.H.W.A. REGION	STATE	PROJECT NO.	SHEET NO.	TOTAL SHEETS	AS BUILT
9	ARIZ.	TEA-PRV-0(205)T			
		PRV 0000 YV			

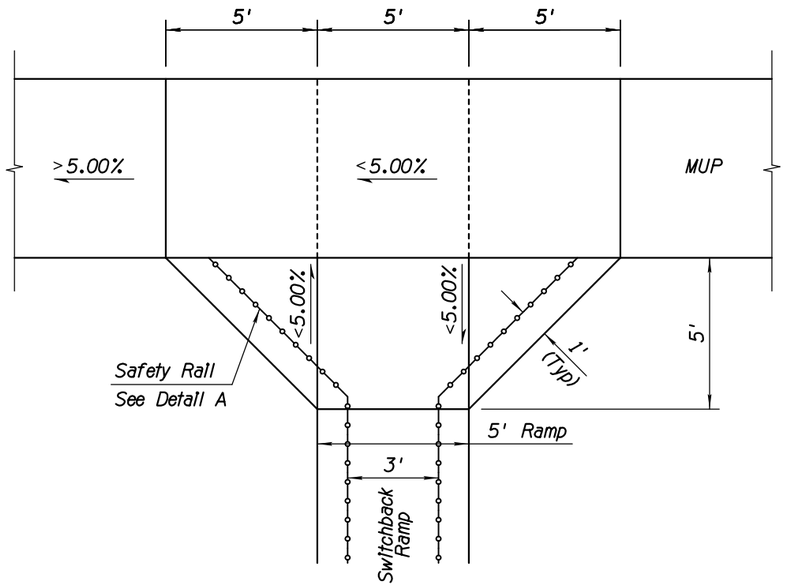

TYPICAL SWITCHBACK RAMP ENTRANCE/EXIT ADJACENT TO MAIN PATH
N.T.S.

Slopes and Elevations Vary Depending on Slope of Multi-Use Path

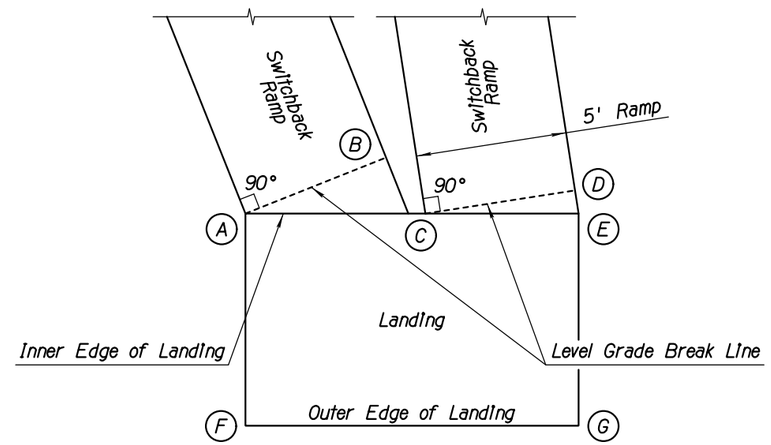

TYPICAL SWITCHBACK LANDING STAKING DIAGRAM
N.T.S.

Skew of Ramps Varies to Mimic Existing Contours

Notes:

1. *Applies to Landings that have two Switchback Ramp Tie-Ins along the Inner Edge of the Landing.*
2. *Data for Points A and E is provided in Detail C. These two points have the same elevation.*
3. *Points B, C, and D have the same Elevation as Points A and E.*
4. *Points A and B represent a 5'-wide level grade break line for the associated Switchback Ramp to Tie-In to the Landing. This grade break is perpendicular to the length of the Ramp.*
5. *Points F and G have an Elevation 0.01' higher than Points A and E.*

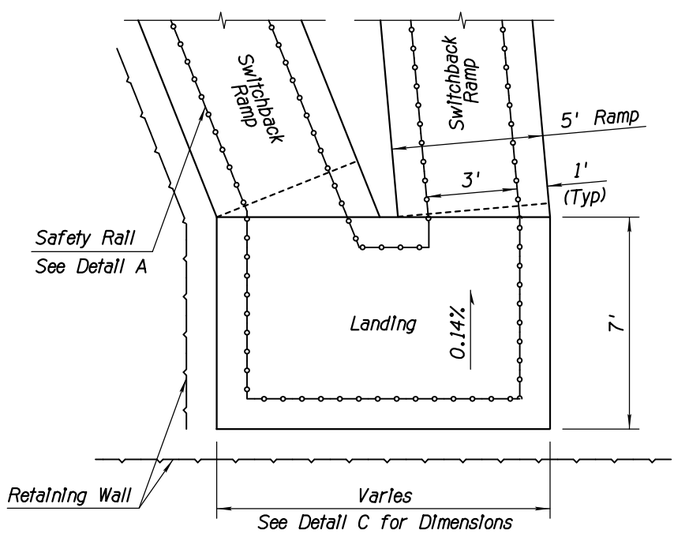

TYPICAL SWITCHBACK LANDING DETAIL OPPOSITE TO MAIN PATH
N.T.S.

Slopes and Elevations Vary Depending on Slope of Multi-Use Path

Note:

1. *See Detail C for Location & Wall Elevation.*

DETAIL E

SWITCHBACK RAMPS AND LANDINGS
SHEET 1 OF 2

	NAME	DATE
DESIGN	SMG	06/14
DRAWN	CPG	06/14
CHECKED	GPF	06/14

PARSONS BRINCKERHOFF

ARIZONA DEPARTMENT OF TRANSPORTATION
INTERMODAL TRANSPORTATION DIVISION
ROADWAY DESIGN SECTION

DETAIL SHEET
DETAIL E

ROUTE | LOCATION PRESCOTT VALLEY PIPELINE & CENTRAL CORE MULTI-USE PATHS (PIPELINE PHASE 1)

Registered Professional Engineer (Civil) CERTIFICATE NO. 49430 GREGORY PATRICK FLY ARIZONA U.S.A. Expires 3/31/2015

DWG NO. G1-5.14

TRACS NO. SL680 01C | TEA-PRV-0(205)T | ____ OF ____

DATE- LOCATION- REVISIONS- FINISHED PLANS- SURVEY NO.

F.H.W.A. REGION	STATE	PROJECT NO.	SHEET NO.	TOTAL SHEETS	AS BUILT
9	ARIZ.	TEA-PRV-0(205)T			
		PRV 0000 YV			

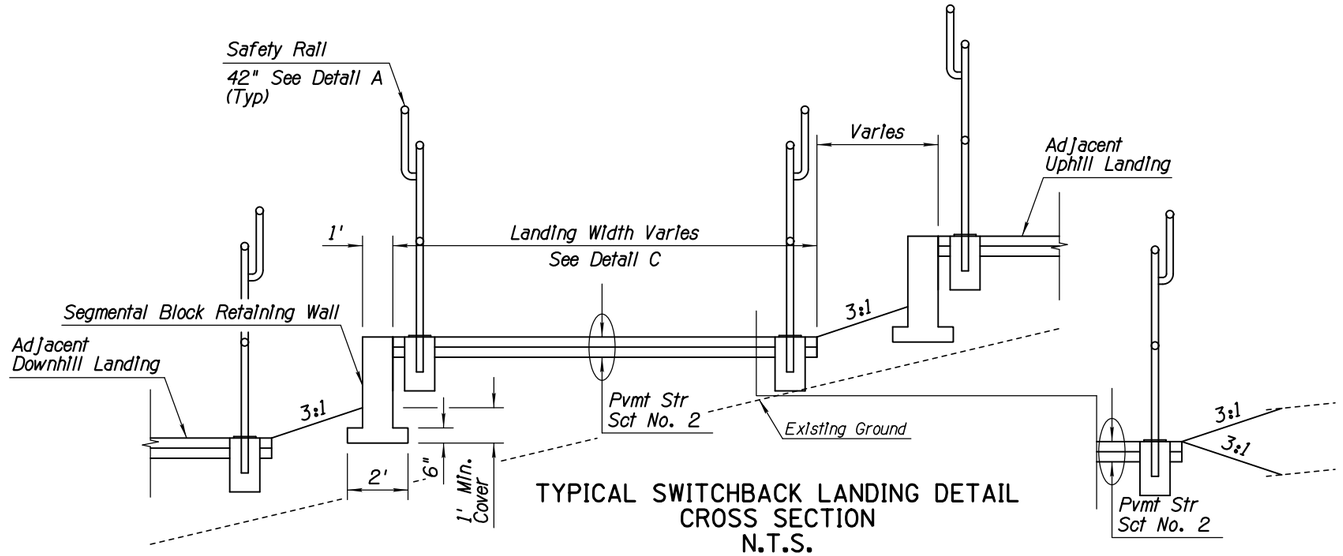

TYPICAL SWITCHBACK LANDING DETAIL
CROSS SECTION
N.T.S.

Slopes and Elevations Vary Depending on Slope of Multi-Use Path.

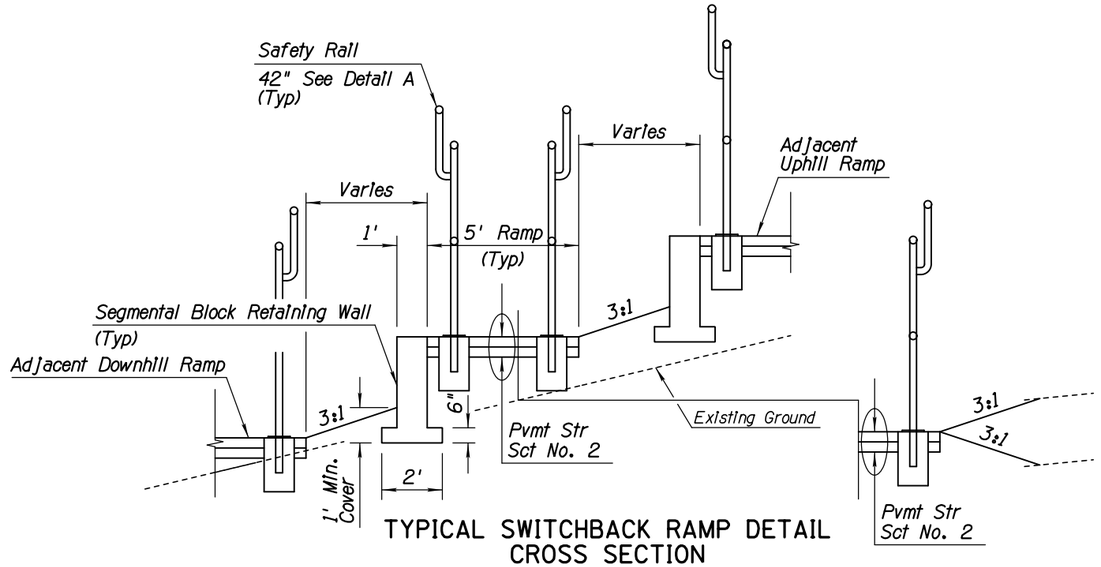

TYPICAL SWITCHBACK RAMP DETAIL
CROSS SECTION
N.T.S.

Slopes and Elevations Vary Depending on Slope of Multi-Use Path.

DETAIL E

SWITCHBACK RAMPS AND LANDINGS
SHEET 2 OF 2

Note:

1. *See Detail C for Location & Wall Elevation.*
2. *See Detail Q for Additional Retaining Wall Information.*

	NAME	DATE
DESIGN	SMG	06/14
DRAWN	CPG	06/14
CHECKED	GPF	06/14

PARSONS BRINCKERHOFF

ARIZONA DEPARTMENT OF TRANSPORTATION
INTERMODAL TRANSPORTATION DIVISION
ROADWAY DESIGN SECTION

DETAIL SHEET
DETAIL E

ROUTE | LOCATION PRESCOTT VALLEY PIPELINE & CENTRAL CORE MULTI-USE PATHS (PIPELINE PHASE 1)

Registered Professional Engineer (Civil) CERTIFICATE NO. 49450 GREGORY PATRICK FLY ARIZONA U.S.A.
Expires 3/31/2015

DWG NO. G1-5.15

TRACS NO. SL680 01C | TEA-PRV-0(205)T | ____ OF ____

DATE- | LOCATION- | REVISIONS- | FINISHED PLANS- | SURVEY NO.

9/12/2014 T:\Prescott_MUP\SL622_ph1\DATA\SL622_dte02.dgn

F.H.W.A. REGION	STATE	PROJECT NO.	SHEET NO.	TOTAL SHEETS	AS BUILT
9	ARIZ.	TEA-PRV-0(205)T			
		PRV 0000 YV			

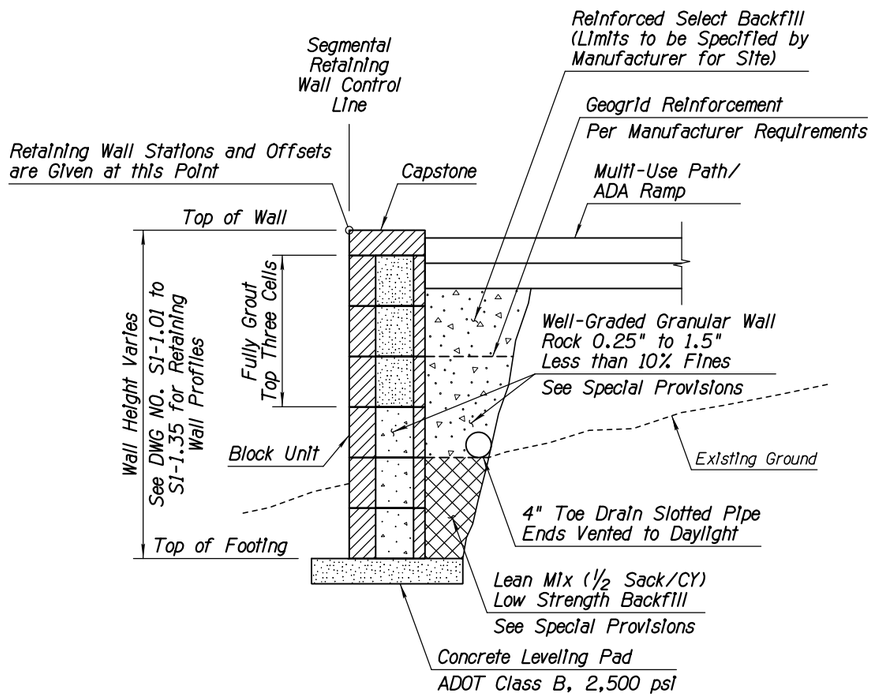

SEGMENTAL RETAINING WALL
SECTION VIEW
FILL SCENARIO
NOT TO SCALE

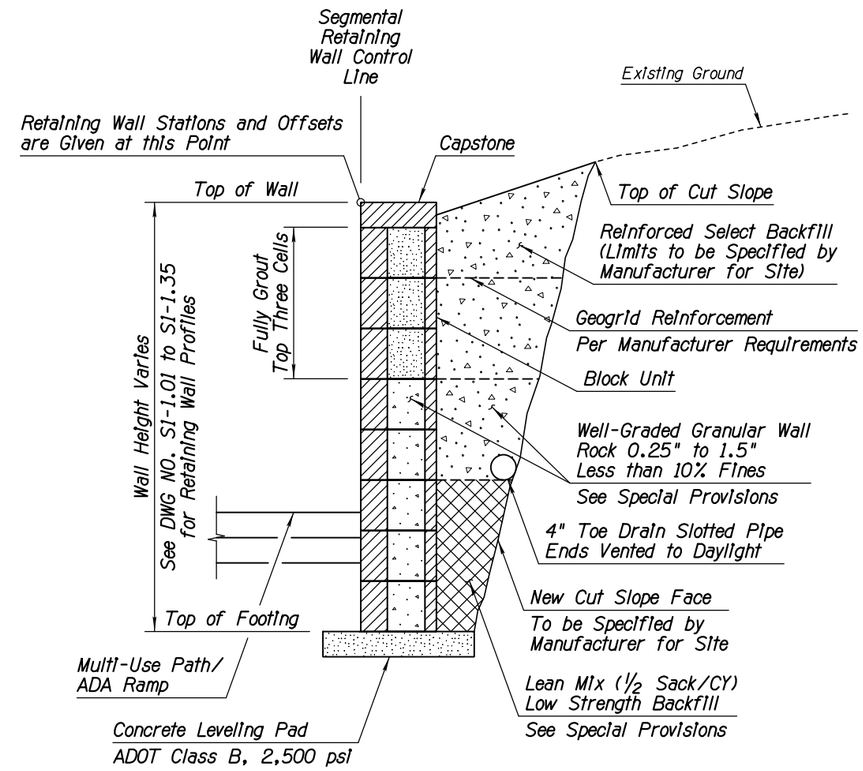

SEGMENTAL RETAINING WALL
SECTION VIEW
CUT SCENARIO
NOT TO SCALE

Notes:

1. See Special Provision for Requirements on Segmental Retaining Wall and Geogrid Reinforcement.
2. Contractor Shall Provide Engineered Design for Wall, Sealed by a Professional Engineer Registered in Arizona.
3. Limits of Select and/or Structural Backfill Determined by Wall Designer.
4. Provide Proposed Drain/Vent Layout Plan with Shop Drawings for Review/Approval to Engineer.
5. See Plans for Handrail Locations
6. Segmental Retaining Walls that are Located Adjacent to the Multi-Use Path will be Designed to Accomodate an H15-44 Loading.

DETAIL Q

SEGMENTAL RETAINING WALL

	NAME	DATE
DESIGN	SMG	06/14
DRAWN	CPG	06/14
CHECKED	GPF	06/14

PARSONS BRINCKERHOFF

ARIZONA DEPARTMENT OF TRANSPORTATION
INTERMODAL TRANSPORTATION DIVISION
ROADWAY DESIGN SECTION

DETAIL SHEET
DETAIL Q

Registered Professional Engineer (Civil) CERTIFICATE NO. 49430 GREGORY PATRICK FLY ARIZONA U.S.A.
Expires 3/31/2015

ROUTE | LOCATION PRESCOTT VALLEY PIPELINE & CENTRAL CORE MULTI-USE PATHS (PIPELINE PHASE 1)

DWG NO. G1-5.16

TRACS NO. SL680 01C | TEA-PRV-0(205)T | ____ OF ____

9/12/2014 T:\Prescott_MUP\SL622_ph1\DATA\SL622_dtq.dgn

SURVEY NO. | FINISHED PLANS- | REVISIONS- | LOCATION- | DATE-

F.H.W.A. REGION	STATE	PROJECT NO.	SHEET NO.	TOTAL SHEETS	AS BUILT
9	ARIZ.	TEA-PRV-0(205)T			
		PRV 0000 YV			

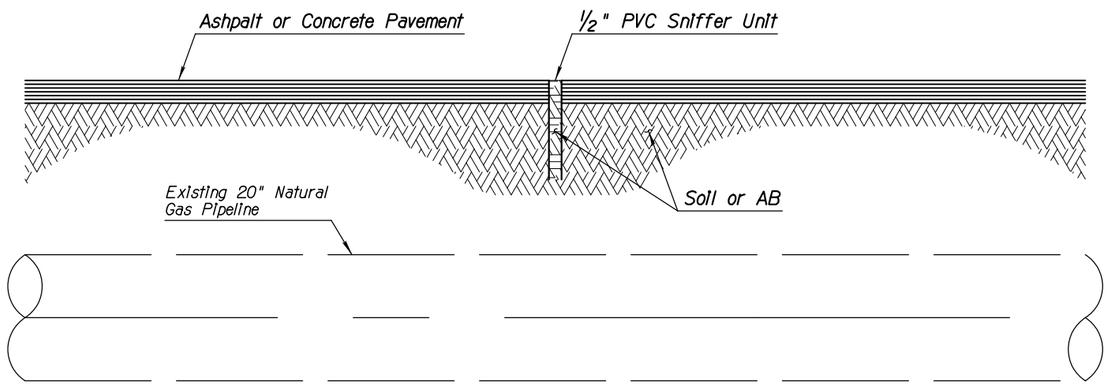

EPNG SNIFFER UNIT
ELEVATION VIEW
NOT TO SCALE

Note:

The PVC Units will be Open-Ended with the Tops Even or Flush with the Top of the Pavement and will Extend Vertically through the Pavement to the Soil or Sub Base Material.

DETAIL R
EPNG SNIFFER UNITS

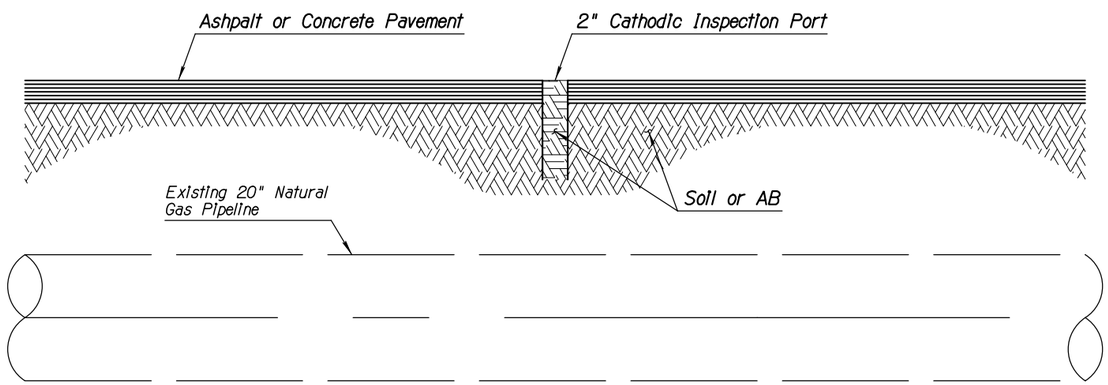

EPNG CATHODIC INSPECTION PORT
ELEVATION VIEW
NOT TO SCALE

Note:

The Cathodic Inspection Ports will be Open-Ended with the Tops Even or Flush with the Top of the Pavement and will Extend Vertically through the Pavement to the Soil or Sub Base Material.

DETAIL S
EPNG CATHODIC INSPECTION PORTS

	NAME	DATE
DESIGN	SMG	06/14
DRAWN	CPG	06/14
CHECKED	GPF	06/14

PARSONS BRINCKERHOFF

ARIZONA DEPARTMENT OF TRANSPORTATION
INTERMODAL TRANSPORTATION DIVISION
ROADWAY DESIGN SECTION

DETAIL SHEET
DETAILS R & S

Registered Professional Engineer (Civil) CERTIFICATE NO. 49430 GREGORY PATRICK FLY ARIZONA U.S.A. Expires 3/31/2015

ROUTE | LOCATION: PRESCOTT VALLEY PIPELINE & CENTRAL CORE MULTI-USE PATHS (PIPELINE PHASE 1)

DWG NO. G1-5.17

TRACS NO. SL680 01C | TEA-PRV-0(205)T | ___ OF ___

DATE- LOCATION- REVISIONS- FINISHED PLANS- SURVEY NO.
DATE- LOCATION- REVISIONS- FINISHED PLANS- SURVEY NO.

F.H.W.A. REGION	STATE	PROJECT NO.	SHEET NO.	TOTAL SHEETS	AS BUILT
9	ARIZ.	TEA-PRV-0(205)T			
		PRV 0000 YV			

All Coordinates Are Ground Coordinates And All Bearings Are Grid Bearings

G.A.F. = 1.00032

PLAN REF NO.	LOCATION	P.I./P.O.T. STATION	COORDINATES										
100	MUP Ph 1 Seg 1 Cst ℄ POB	100+00.00	N=1311364.58	E=581948.61									
101	MUP Ph 1 Seg 1 Cst ℄ PC	100+10.00	N=1311374.56	E=581949.27									
102	MUP Ph 1 Seg 1 Cst ℄ PI	100+24.93	N=1311389.45	E=581950.26	SIMPLE	Δ=30°22'19"	R=55.00'	T=14.93'	L=29.16'	Ext=1.99'	e=NC		
103	MUP Ph 1 Seg 1 Cst ℄ PT	100+39.16	N=1311401.80	E=581958.64									
104	MUP Ph 1 Seg 1 Cst ℄ PC	100+91.00	N=1311444.70	E=581987.76									
105	MUP Ph 1 Seg 1 Cst ℄ PI	101+16.47	N=1311465.78	E=582002.06	SIMPLE	Δ=18°39'36"	R=155.00'	T=25.47'	L=50.48'	Ext=2.08'	e=NC		
106	MUP Ph 1 Seg 1 Cst ℄ PT	101+41.49	N=1311490.31	E=582008.87									
107	MUP Ph 1 Seg 1 Cst ℄ PC	101+97.42	N=1311544.21	E=582023.82									
108	MUP Ph 1 Seg 1 Cst ℄ PI	102+64.56	N=1311608.91	E=582041.77	SIMPLE	Δ=33°13'49"	R=225.00'	T=67.14'	L=130.49'	Ext=9.80'	e=NC		
109	MUP Ph 1 Seg 1 Cst ℄ PT	103+27.92	N=1311672.86	E=582021.33									
110	MUP Ph 1 Seg 1 Cst ℄ PC	106+00.69	N=1311932.69	E=581938.29									
111	MUP Ph 1 Seg 1 Cst ℄ PI	106+29.05	N=1311959.71	E=581929.66	SIMPLE	Δ=14°22'07"	R=225.00'	T=28.36'	L=56.43'	Ext=1.78'	e=NC		
112	MUP Ph 1 Seg 1 Cst ℄ PRC	106+57.12	N=1311983.74	E=581914.59									
113	MUP Ph 1 Seg 1 Cst ℄ PI	106+86.71	N=1312008.81	E=581898.86	SIMPLE	Δ=14°59'13"	R=225.00'	T=29.60'	L=58.85'	Ext=1.94'	e=NC		
114	MUP Ph 1 Seg 1 Cst ℄ PT	107+15.97	N=1312037.10	E=581890.16									
115	MUP Ph 1 Seg 1 Cst ℄ POE	107+21.17	N=1312042.06	E=581888.63									
200	MUP Ph 1 Seg 2 Cst ℄ POB	200+00.00	N=1312065.13	E=581881.53									
201	MUP Ph 1 Seg 2 Cst ℄ POE	212+46.14	N=1313256.14	E=581515.00									
300	MUP Ph 1 Seg 3 Cst ℄ POB	300+00.00	N=1313303.12	E=581500.55									
301	MUP Ph 1 Seg 3 Cst ℄ POE	301+72.05	N=1313467.57	E=581449.94									

CENTERLINE CONTROL POINT AND CURVE DATA TABLE

All bearings and angles have been rounded to the nearest second.
Use the control points provided and their respective state plane coordinates to re-establish the centerline of each path.

	NAME	DATE
DESIGN	SMG	06/14
DRAWN	CPG	06/14
CHECKED	GPF	06/14

PARSONS BRINCKERHOFF

ARIZONA DEPARTMENT OF TRANSPORTATION
INTERMODAL TRANSPORTATION DIVISION
ROADWAY DESIGN SECTION

GEOMETRIC SUMMARY SHEET

ROUTE | LOCATION PRESCOTT VALLEY PIPELINE & CENTRAL CORE MULTI-USE PATHS (PIPELINE PHASE 1)

Registered Professional Engineer (Civil) CERTIFICATE NO. 49430 GREGORY PATRICK FLY ARIZONA U.S.A.
Expires 3/31/2015

DWG NO. C1-1.01

TRACS NO. SL680 01C | TEA-PRV-0(205)T | ___ OF ___

DATE- LOCATION- REVISIONS- FINISHED PLANS- SURVEY NO.

F.H.W.A. REGION	STATE	PROJECT NO.	SHEET NO.	TOTAL SHEETS	AS BUILT
9	ARIZ.	TEA-PRV-0(205)T			
		PRV 0000 YV			

All Coordinates Are Ground Coordinates And All Bearings Are Grid Bearings

G.A.F. = 1.00032

PLAN REF NO.	LOCATION	P.I./P.O.T. STATION	COORDINATES									
400	MUP Ph 1 Seg 4 Cst ℄ POB	400+00.00	N=1313493.34	E=581442.01								
401	MUP Ph 1 Seg 4 Cst ℄ PC	408+89.71	N=1314343.70	E=581180.31								
402	MUP Ph 1 Seg 4 Cst ℄ PI	409+35.27	N=1314387.25	E=581166.91	SIMPLE	Δ=20°39'29"	R=250.00'	T=45.56'	L=90.14'	Ext=4.12'	e=NC	
403	MUP Ph 1 Seg 4 Cst ℄ PRC	409+79.85	N=1314423.27	E=581139.01								
404	MUP Ph 1 Seg 4 Cst ℄ PI	410+25.41	N=1314459.29	E=581111.10	SIMPLE	Δ=20°39'29"	R=250.00'	T=45.56'	L=90.14'	Ext=4.12'	e=NC	
405	MUP Ph 1 Seg 4 Cst ℄ PT	410+69.99	N=1314502.83	E=581097.70								
406	MUP Ph 1 Seg 4 Cst ℄ PC	416+58.94	N=1315065.73	E=580924.47								
407	MUP Ph 1 Seg 4 Cst ℄ PI	417+04.50	N=1315109.28	E=580911.07	SIMPLE	Δ=20°39'29"	R=250.00'	T=45.56'	L=90.14'	Ext=4.12'	e=NC	
408	MUP Ph 1 Seg 4 Cst ℄ PRC	417+49.07	N=1315154.76	E=580913.90								
409	MUP Ph 1 Seg 4 Cst ℄ PI	417+94.64	N=1315200.23	E=580916.72	SIMPLE	Δ=20°39'29"	R=250.00'	T=45.56'	L=90.14'	Ext=4.12'	e=NC	
410	MUP Ph 1 Seg 4 Cst ℄ PT	418+39.21	N=1315243.78	E=580903.32								
411	MUP Ph 1 Seg 4 Cst ℄ PC	418+91.58	N=1315293.83	E=580887.91								
412	MUP Ph 1 Seg 4 Cst ℄ PI	419+15.29	N=1315316.49	E=580880.94	SIMPLE	Δ=73°04'36"	R=32.00'	T=23.71'	L=40.81'	Ext=7.83'	e=NC	
413	MUP Ph 1 Seg 4 Cst ℄ PT	419+32.39	N=1315316.42	E=580857.23								
414	MUP Ph 1 Seg 4 Cst ℄ PI	419+33.55	N=1315316.41	E=580856.07								
415	MUP Ph 1 Seg 4 Cst ℄ POE	419+42.70	N=1315325.15	E=580853.36								

CENTERLINE CONTROL POINT AND CURVE DATA TABLE

All bearings and angles have been rounded to the nearest second.
Use the control points provided and their respective state plane coordinates to re-establish the centerline of each path.

	NAME	DATE
DESIGN	SMG	06/14
DRAWN	CPG	06/14
CHECKED	GPF	06/14

PARSONS BRINCKERHOFF

ARIZONA DEPARTMENT OF TRANSPORTATION
INTERMODAL TRANSPORTATION DIVISION
ROADWAY DESIGN SECTION

GEOMETRIC SUMMARY SHEET

ROUTE | LOCATION: PRESCOTT VALLEY PIPELINE & CENTRAL CORE MULTI-USE PATHS (PIPELINE PHASE 1)

Registered Professional Engineer (Civil) CERTIFICATE NO. 49430 GREGORY PATRICK FLY ARIZONA U.S.A.
Expires 3/31/2015

DWG NO. C1-1.02

TRACS NO. SL680 01C | TEA-PRV-0(205)T | ___ OF ___

DATE- LOCATION- REVISIONS- FINISHED PLANS- SURVEY NO.

F.H.W.A. REGION	STATE	PROJECT NO.	SHEET NO.	TOTAL SHEETS	AS BUILT
9	ARIZ.	TEA-PRV-0(205)T			
		PRV 0000 YV			

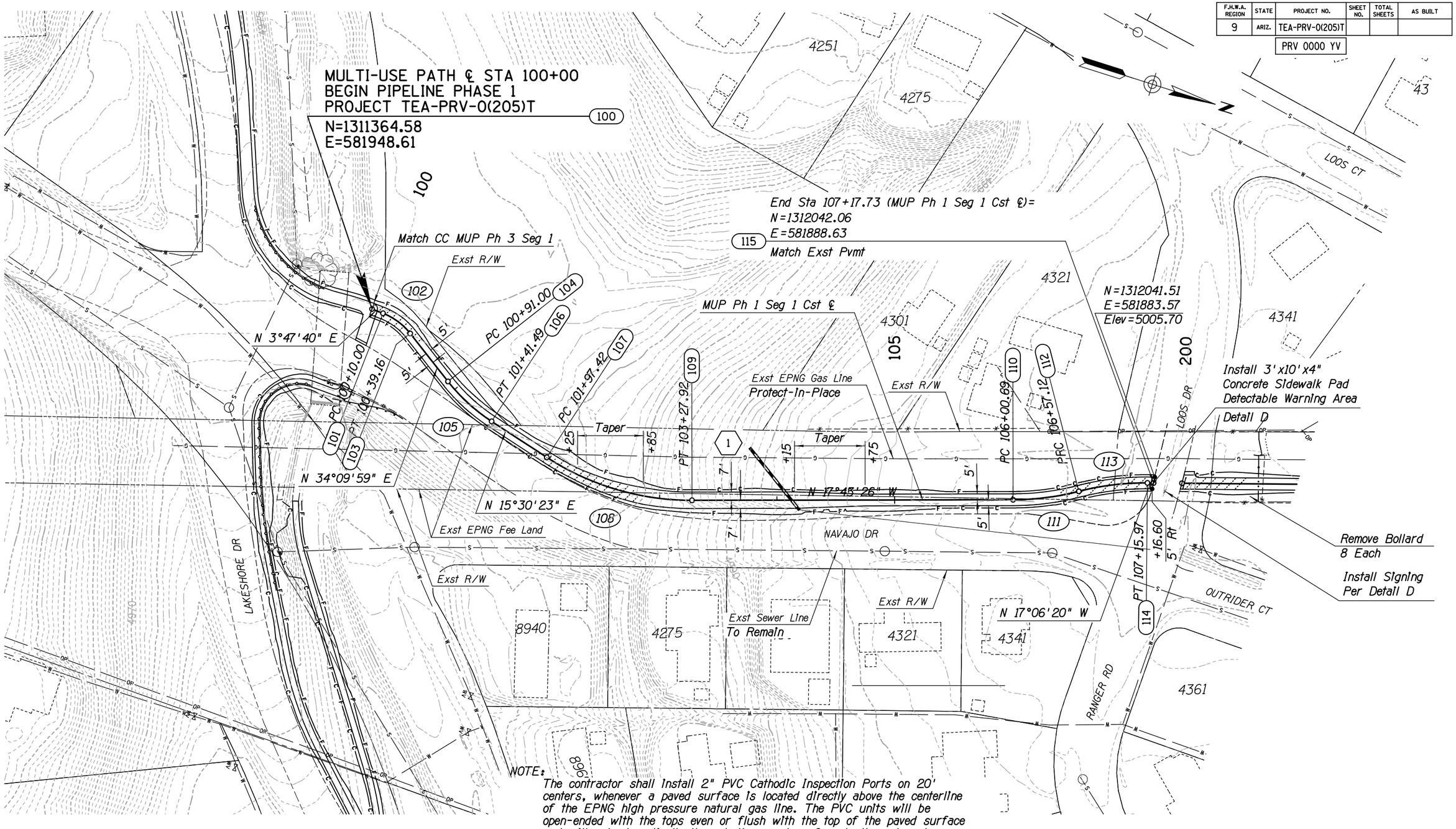

NOTE:
The contractor shall install 2" PVC Cathodic Inspection Ports on 20' centers, whenever a paved surface is located directly above the centerline of the EPNG high pressure natural gas line. The PVC units will be open-ended with the tops even or flush with the top of the paved surface and will extend vertically through the paved surface to the subgrade.

The contractor shall install 1/2" PVC Sniffer Units on 40' centers, whenever a paved surface is located within 10' of the EPNG high pressure natural gas line. The PVC units will be open-ended with the tops even or flush with the top of the paved surface and will extend vertically through the paved surface to the subgrade.

The PVC Sniffer Units and PVC Cathodic Inspection Ports shall be filled with Roadway Embankment Material.

NOTE:
Caution, EPNG high pressure natural gas line present. EPNG Supervisor should be contacted at 928-527-6535 a minimum of 72 hours prior to any construction activities inside EPNG property.

	NAME	DATE
DESIGN	SMG	06/14
DRAWN	CPG	06/14
CHECKED	GPF	06/14

PARSONS BRINCKERHOFF

ARIZONA DEPARTMENT OF TRANSPORTATION
INTERMODAL TRANSPORTATION DIVISION
ROADWAY DESIGN SECTION

PLAN SHEET
Sta 100+00 to Sta 107+17.73

ROUTE | LOCATION: PRESCOTT VALLEY PIPELINE & CENTRAL CORE MULTI-USE PATHS (PIPELINE PHASE 1)

Registered Professional Engineer (Civil) CERTIFICATE NO. 49430 GREGORY PATRICK FLY ARIZONA U.S.A. Expires 3/31/2015

DWG NO. C1-2.01

TRACS NO. SL680 01C | TEA-PRV-0(205)T | ___ OF ___

F.H.W.A. REGION	STATE	PROJECT NO.	SHEET NO.	TOTAL SHEETS	AS BUILT
9	ARIZ.	TEA-PRV-0(205)T			

PRV 0000 YV

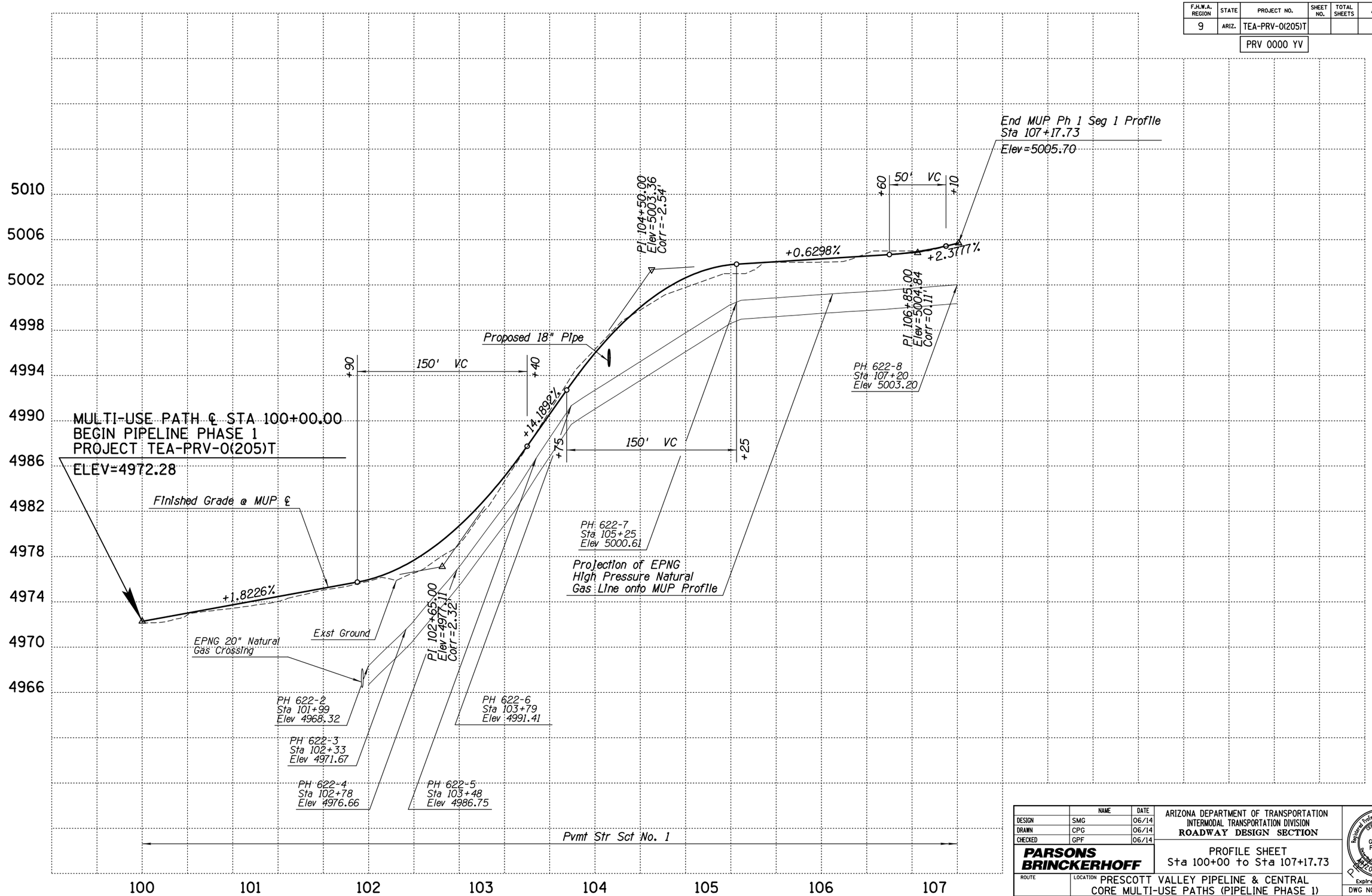

	NAME	DATE
DESIGN	SMG	06/14
DRAWN	CPG	06/14
CHECKED	GPF	06/14

PARSONS BRINCKERHOFF

ARIZONA DEPARTMENT OF TRANSPORTATION
INTERMODAL TRANSPORTATION DIVISION
ROADWAY DESIGN SECTION

PROFILE SHEET
Sta 100+00 to Sta 107+17.73

ROUTE | LOCATION: PRESCOTT VALLEY PIPELINE & CENTRAL CORE MULTI-USE PATHS (PIPELINE PHASE 1)

Registered Professional Engineer (Civil) CERTIFICATE NO. 49430 GREGORY PATRICK FLY ARIZONA U.S.A.
Expires 3/31/2015

DWG NO. C1-2.02

TRACS NO. SL680 01C | TEA-PRV-0(205)T | ____ OF ____

9/12/2014 T:\Prescott_MUP\SL622_ph1\MUP\SL622_prf01.dgn

F.H.W.A. REGION	STATE	PROJECT NO.	SHEET NO.	TOTAL SHEETS	AS BUILT
9	ARIZ.	TEA-PRV-0(205)T			

PRV 0000 YV

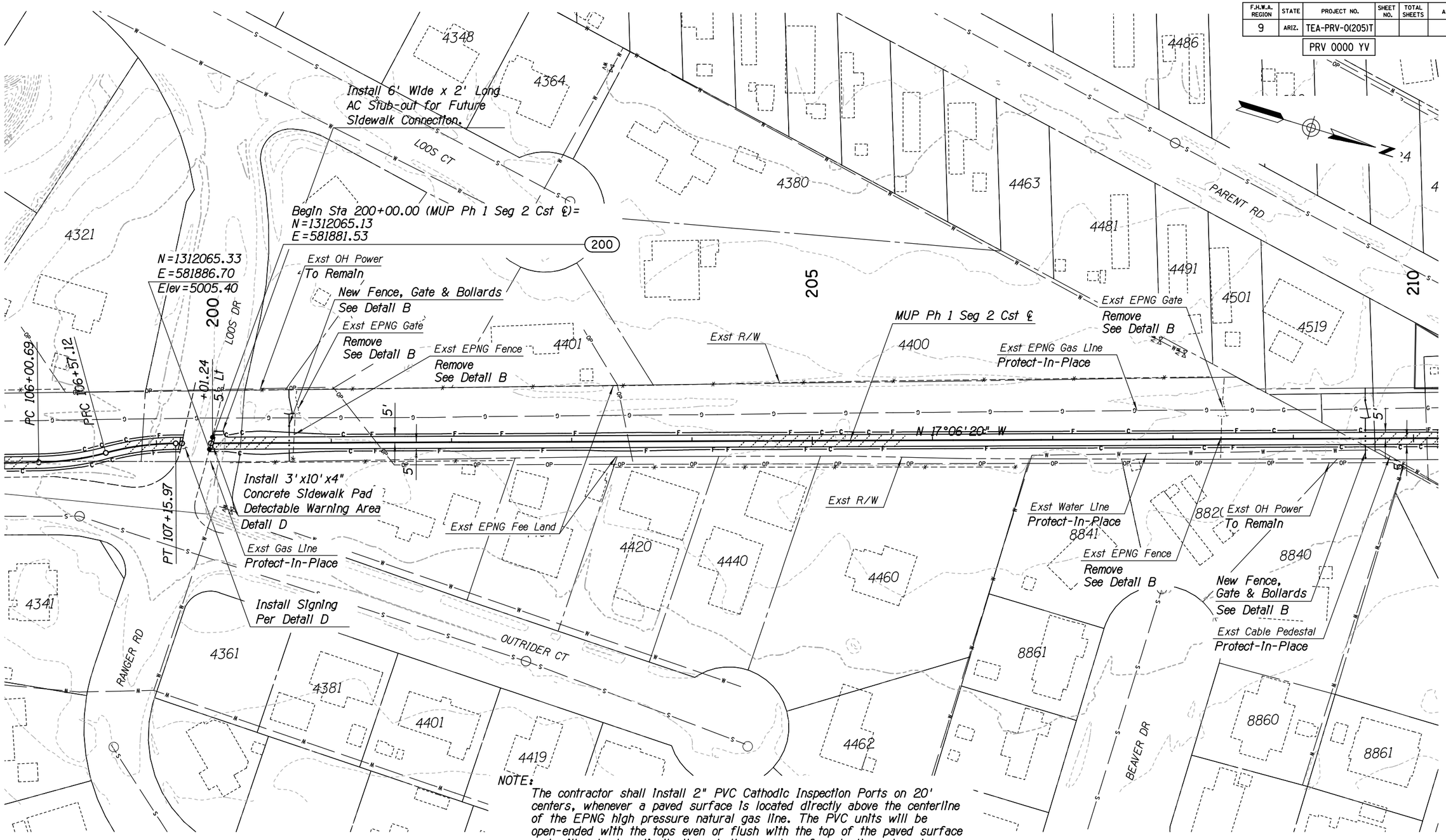

NOTE:
Caution, EPNG high pressure natural gas line present. EPNG Supervisor should be contacted at 928-527-6535 a minimum of 72 hours prior to any construction activities inside EPNG property.

NOTE:
The contractor shall install 2" PVC Cathodic Inspection Ports on 20' centers, whenever a paved surface is located directly above the centerline of the EPNG high pressure natural gas line. The PVC units will be open-ended with the tops even or flush with the top of the paved surface and will extend vertically through the paved surface to the subgrade.

The contractor shall install 1/2" PVC Sniffer Units on 40' centers, whenever a paved surface is located within 10' of the EPNG high pressure natural gas line. The PVC units will be open-ended with the tops even or flush with the top of the paved surface and will extend vertically through the paved surface to the subgrade.

The PVC Sniffer Units and PVC Cathodic Inspection Ports shall be filled with Roadway Embankment Material.

	NAME	DATE
DESIGN	SMG	06/14
DRAWN	CPG	06/14
CHECKED	GPF	06/14

PARSONS BRINCKERHOFF

ARIZONA DEPARTMENT OF TRANSPORTATION
INTERMODAL TRANSPORTATION DIVISION
ROADWAY DESIGN SECTION

PLAN SHEET
STA 200+00 TO STA 210+00

ROUTE | LOCATION: PRESCOTT VALLEY PIPELINE & CENTRAL CORE MULTI-USE PATHS (PIPELINE PHASE 1)

Registered Professional Engineer (Civil) CERTIFICATE NO. 49430 GREGORY PATRICK FLY ARIZONA U.S.A. Expires 3/31/2015

DWG NO. C1-2.03

TRACS NO. SL680 01C | TEA-PRV-0(205)T | ____ OF ____

DATE- LOCATION- REVISIONS- FINISHED PLANS- SURVEY NO.

9/12/2014 T:\Prescott_MUP\SL622_ph1\MUP\SL622_pl02.dgn

F.H.W.A. REGION	STATE	PROJECT NO.	SHEET NO.	TOTAL SHEETS	AS BUILT
9	ARIZ.	TEA-PRV-0(205)T			
		PRV 0000 YV			

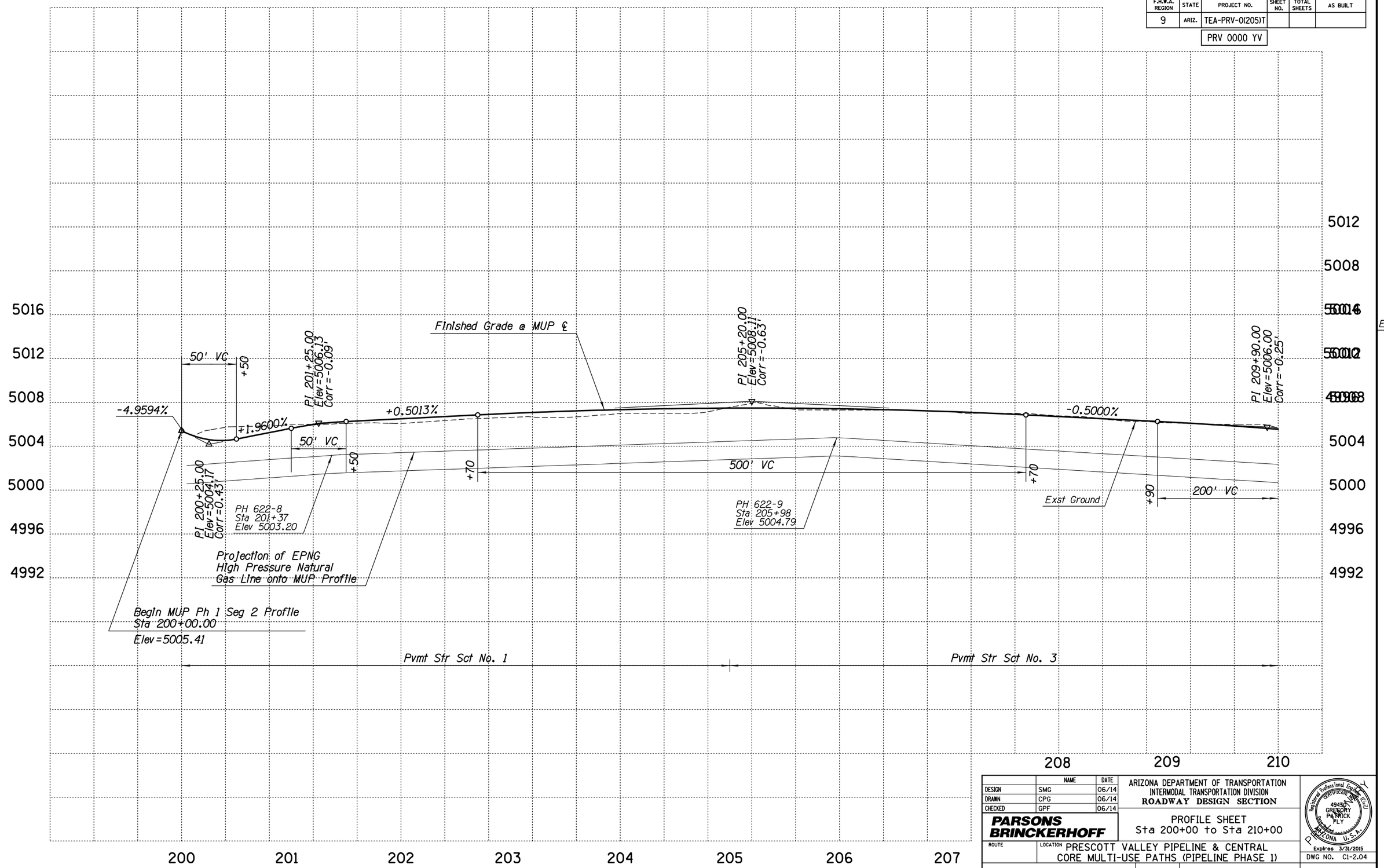

	NAME	DATE
DESIGN	SMG	06/14
DRAWN	CPG	06/14
CHECKED	GPF	06/14

PARSONS BRINCKERHOFF

ARIZONA DEPARTMENT OF TRANSPORTATION
INTERMODAL TRANSPORTATION DIVISION
ROADWAY DESIGN SECTION

PROFILE SHEET
Sta 200+00 to Sta 210+00

ROUTE | LOCATION PRESCOTT VALLEY PIPELINE & CENTRAL CORE MULTI-USE PATHS (PIPELINE PHASE 1)

Registered Professional Engineer (Civil) CERTIFICATE NO. 49450 GREGORY PATRICK FLY ARIZONA U.S.A.
Expires 3/31/2015

DWG NO. C1-2.04

TRACS NO. SL680 01C | TEA-PRV-0(205)T | ____ OF ____

9/12/2014 T:\Prescott_MUP\SL622_ph1\MUP\SL622_prf02.dgn

DATE- LOCATION- REVISIONS- FINISHED PLANS- SURVEY NO.

F.H.W.A. REGION	STATE	PROJECT NO.	SHEET NO.	TOTAL SHEETS	AS BUILT
9	ARIZ.	TEA-PRV-0(205)T			

PRV 0000 YV

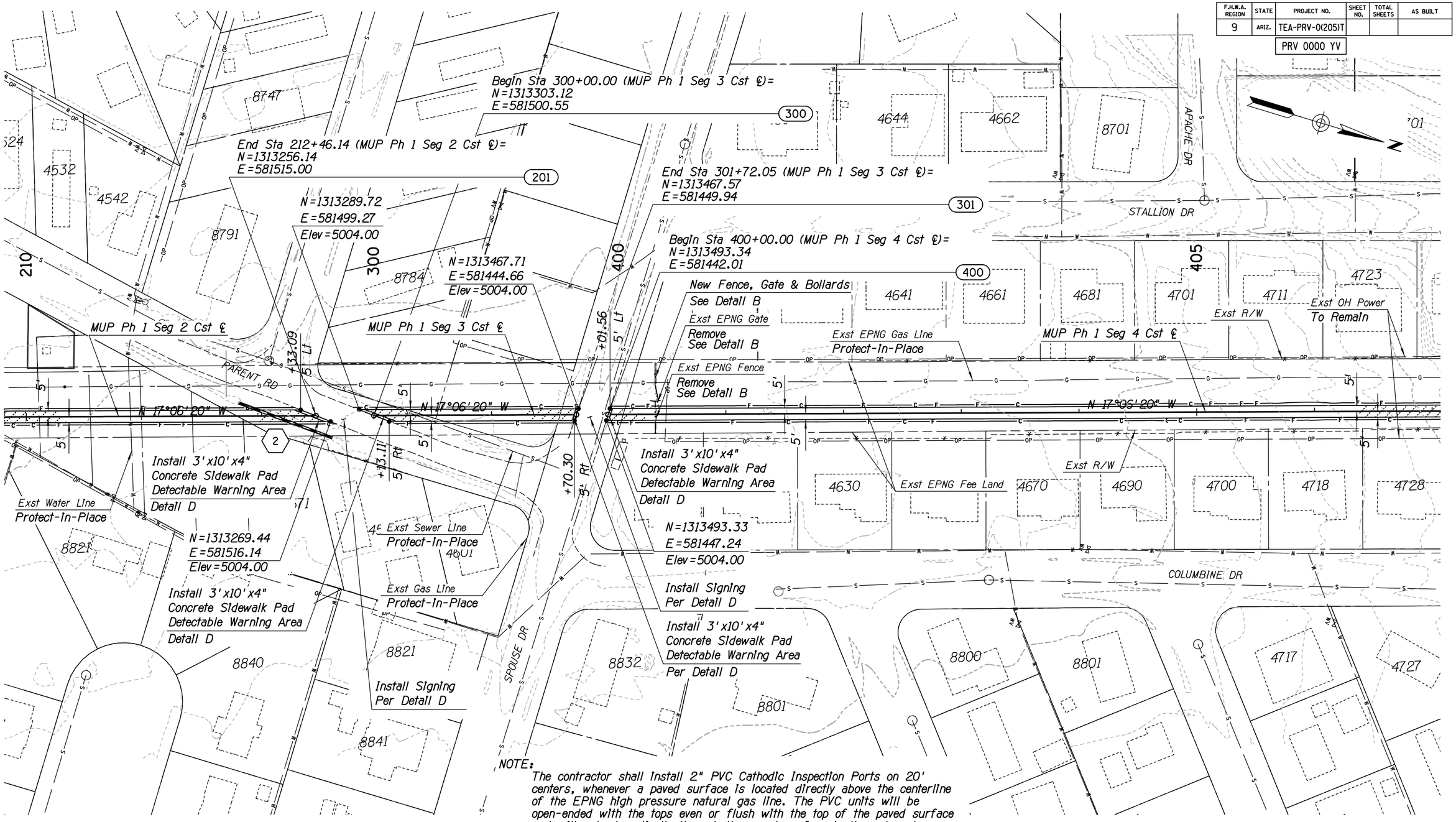

NOTE:
Caution, EPNG high pressure natural gas line present. EPNG Supervisor should be contacted at 928-527-6535 a minimum of 72 hours prior to any construction activities inside EPNG property.

NOTE:
The contractor shall install 2" PVC Cathodic Inspection Ports on 20' centers, whenever a paved surface is located directly above the centerline of the EPNG high pressure natural gas line. The PVC units will be open-ended with the tops even or flush with the top of the paved surface and will extend vertically through the paved surface to the subgrade.

The contractor shall install 1/2" PVC Sniffer Units on 40' centers, whenever a paved surface is located within 10' of the EPNG high pressure natural gas line. The PVC units will be open-ended with the tops even or flush with the top of the paved surface and will extend vertically through the paved surface to the subgrade.

The PVC Sniffer Units and PVC Cathodic Inspection Ports shall be filled with Roadway Embankment Material.

	NAME	DATE
DESIGN	SMG	06/14
DRAWN	CPG	06/14
CHECKED	GPF	06/14

PARSONS BRINCKERHOFF

ARIZONA DEPARTMENT OF TRANSPORTATION
INTERMODAL TRANSPORTATION DIVISION
ROADWAY DESIGN SECTION

PLAN SHEET
Sta 210+00 to 406+40

ROUTE | LOCATION: PRESCOTT VALLEY PIPELINE & CENTRAL CORE MULTI-USE PATHS (PIPELINE PHASE 1)

Registered Professional Engineer (Civil) CERTIFICATE NO. 49430 GREGORY PATRICK FLY ARIZONA U.S.A.
Expires 3/31/2015

DWG NO. C1-2.05

TRACS NO. SL680 01C | TEA-PRV-0(205)T | ____ OF ____

9/12/2014 T:\Prescott_MUP\SL622_ph1\MUP\SL622_pl03.dgn

F.H.W.A. REGION	STATE	PROJECT NO.	SHEET NO.	TOTAL SHEETS	AS BUILT
9	ARIZ.	TEA-PRV-0(205)T			
		PRV 0000 YV			

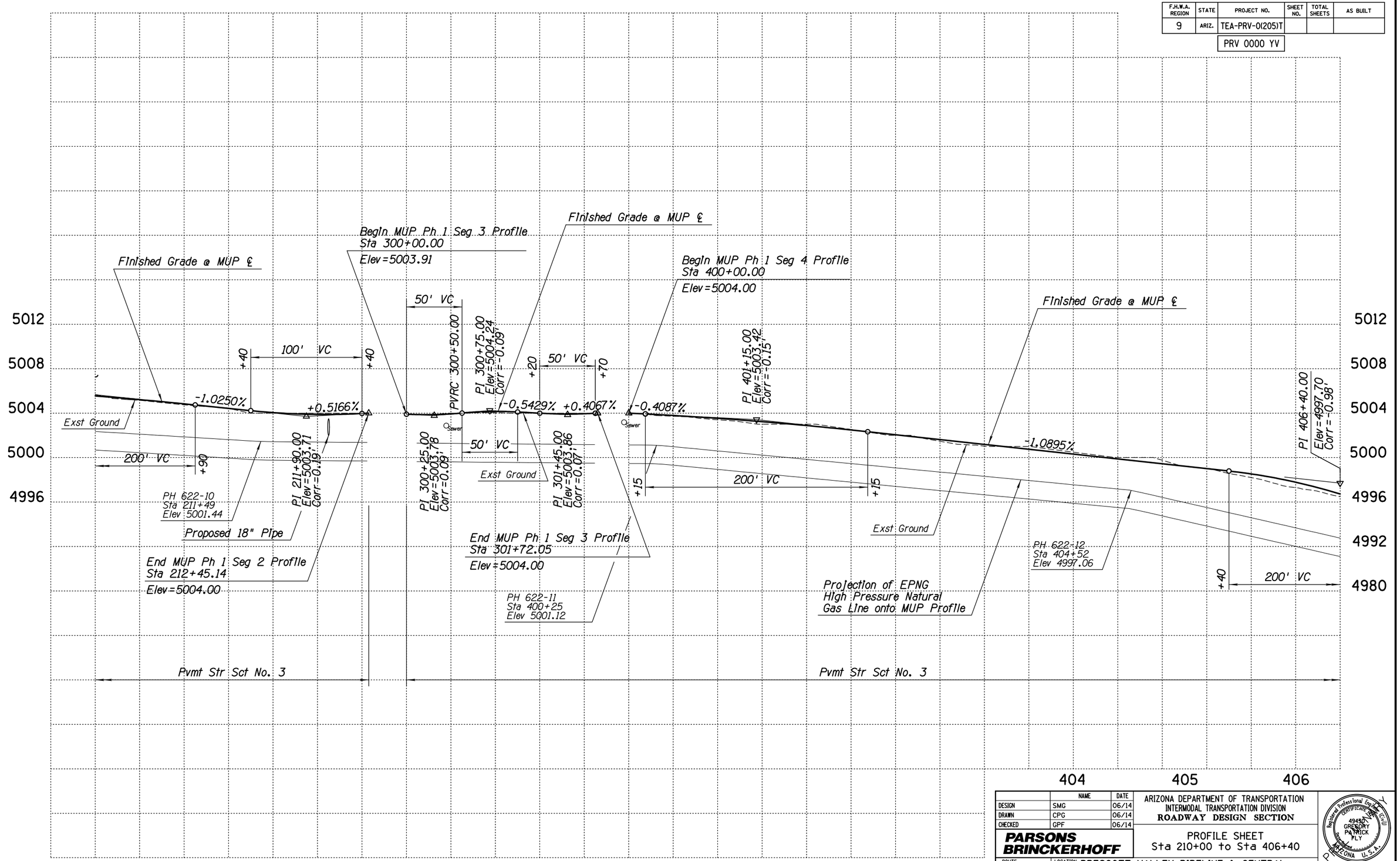

	NAME	DATE
DESIGN	SMG	06/14
DRAWN	CPG	06/14
CHECKED	GPF	06/14

PARSONS BRINCKERHOFF

ARIZONA DEPARTMENT OF TRANSPORTATION
INTERMODAL TRANSPORTATION DIVISION
ROADWAY DESIGN SECTION

PROFILE SHEET
Sta 210+00 to Sta 406+40

ROUTE | LOCATION PRESCOTT VALLEY PIPELINE & CENTRAL CORE MULTI-USE PATHS (PIPELINE PHASE 1)

Registered Professional Engineer (Civil) CERTIFICATE NO. 49430 GREGORY PATRICK FLY ARIZONA U.S.A.
Expires 3/31/2015

DWG NO. C1-2.06

TRACS NO. SL680 01C | TEA-PRV-0(205)T | ___ OF ___

9/12/2014 T:\Prescott_MUP\SL622_ph1\MUP\SL622_prf03.dgn

DATE- LOCATION- REVISIONS- FINISHED PLANS- SURVEY NO.

F.H.W.A. REGION	STATE	PROJECT NO.	SHEET NO.	TOTAL SHEETS	AS BUILT
9	ARIZ.	TEA-PRV-0(205)T			
		PRV 0000 YV			

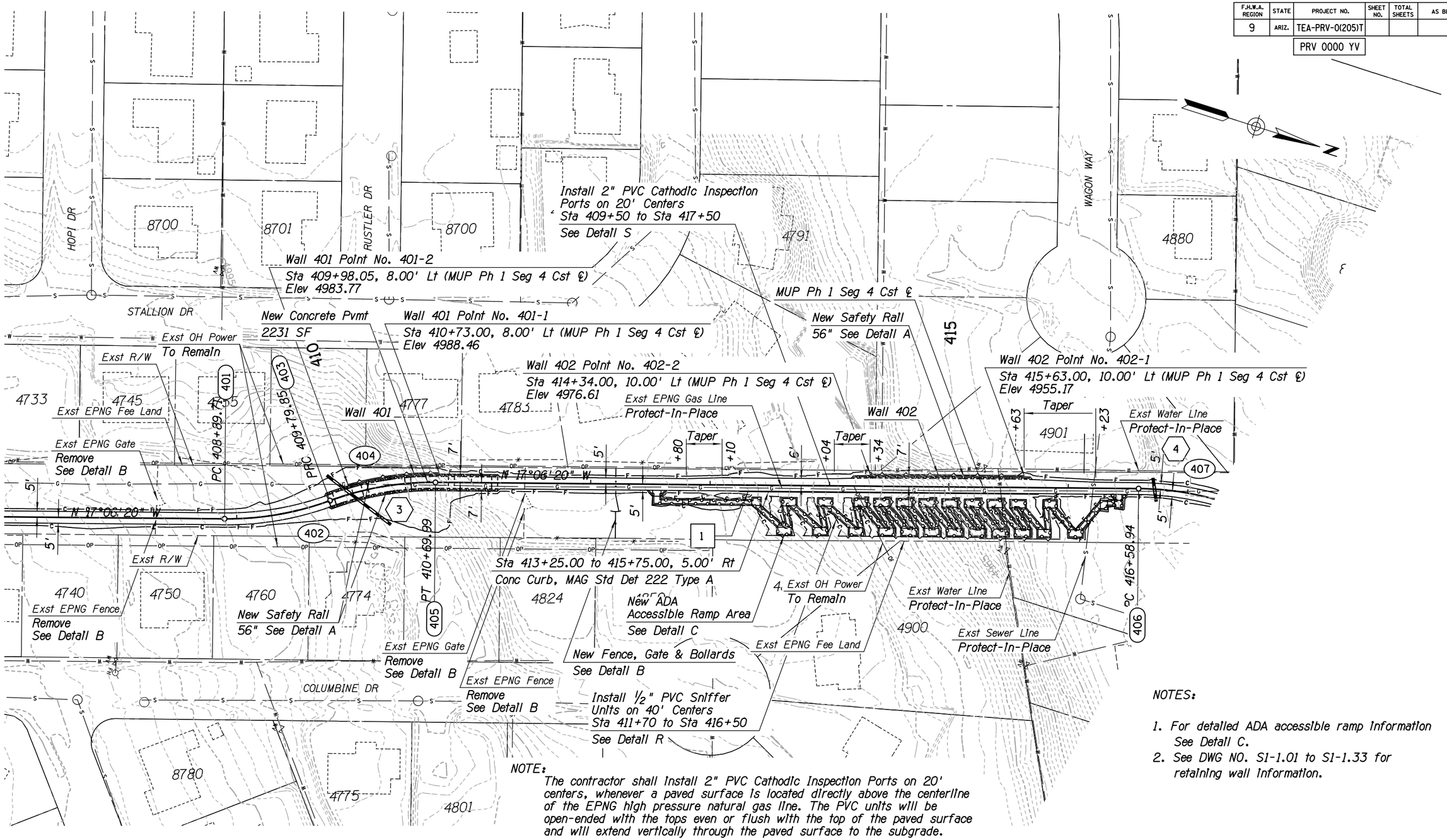

NOTES:

1. For detailed ADA accessible ramp information See Detail C.
2. See DWG NO. S1-1.01 to S1-1.33 for retaining wall information.

NOTE:

The contractor shall install 2" PVC Cathodic Inspection Ports on 20' centers, whenever a paved surface is located directly above the centerline of the EPNG high pressure natural gas line. The PVC units will be open-ended with the tops even or flush with the top of the paved surface and will extend vertically through the paved surface to the subgrade.

The contractor shall install 1/2" PVC Sniffer Units on 40' centers, whenever a paved surface is located within 10' of the EPNG high pressure natural gas line. The PVC units will be open-ended with the tops even or flush with the top of the paved surface and will extend vertically through the paved surface to the subgrade.

The PVC Sniffer Units and PVC Cathodic Inspection Ports shall be filled with Roadway Embankment Material.

NOTE:

Caution, EPNG high pressure natural gas line present. EPNG Supervisor should be contacted at 928-527-6535 a minimum of 72 hours prior to any construction activities inside EPNG property.

	NAME	DATE
DESIGN	SMG	06/14
DRAWN	CPG	06/14
CHECKED	GPF	06/14

PARSONS BRINCKERHOFF

ARIZONA DEPARTMENT OF TRANSPORTATION
INTERMODAL TRANSPORTATION DIVISION
ROADWAY DESIGN SECTION

PLAN SHEET
Sta 406+40 to Sta 417+40

ROUTE | LOCATION PRESCOTT VALLEY PIPELINE & CENTRAL CORE MULTI-USE PATHS (PIPELINE PHASE 1)

Registered Professional Engineer (Civil) CERTIFICATE NO. 49450 GREGORY PATRICK FLY ARIZONA U.S.A.
Expires 3/31/2015

DWG NO. C1-2.07

TRACS NO. SL680 01C | TEA-PRV-0(205)T | ____ OF ____

9/12/2014 T:\Prescott_MUP\SL622_ph1\MUP\SL622_p104.dgn

F.H.W.A. REGION	STATE	PROJECT NO.	SHEET NO.	TOTAL SHEETS	AS BUILT
9	ARIZ.	TEA-PRV-0(205)T			
		PRV 0000 YV			

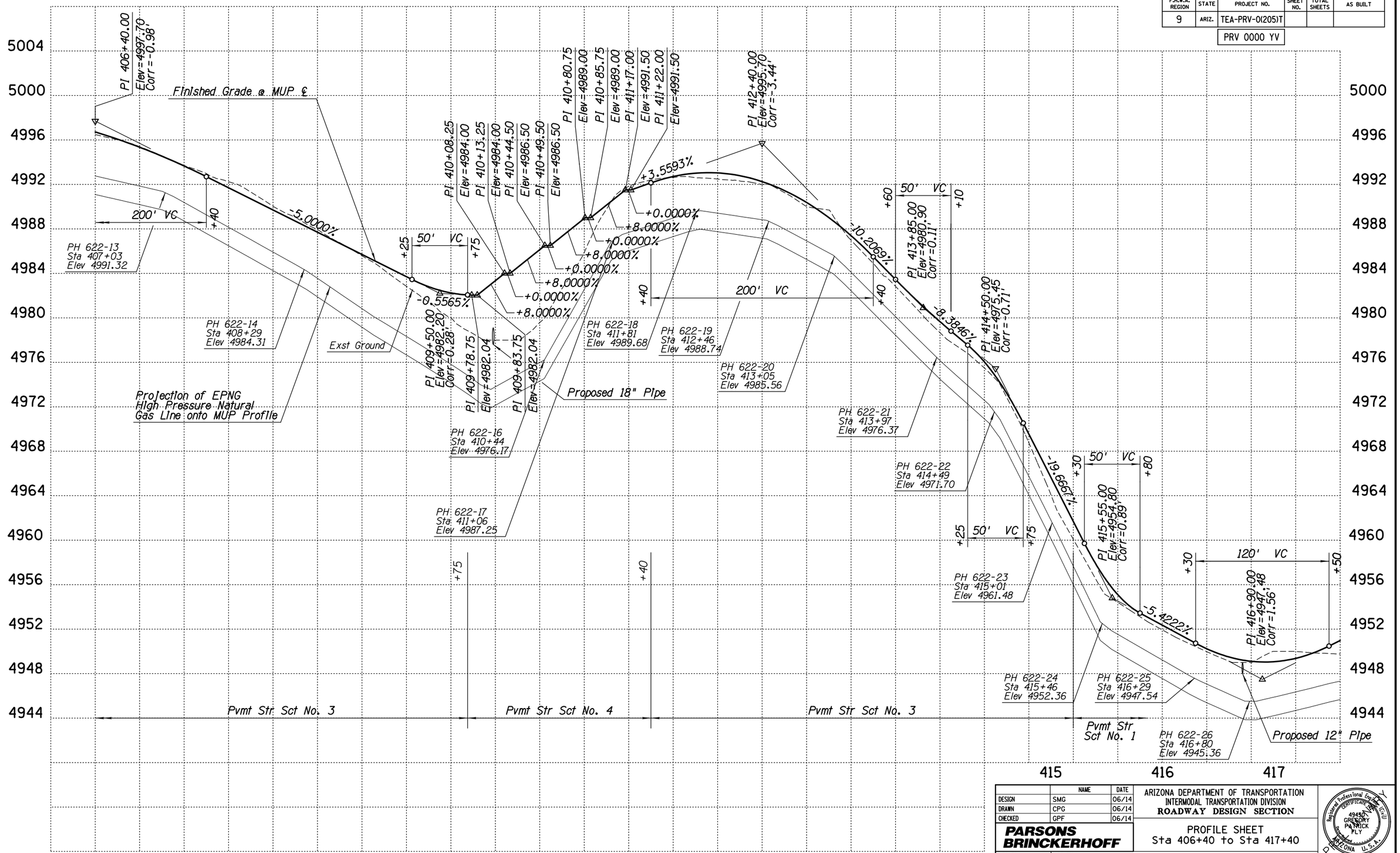

	NAME	DATE
DESIGN	SMG	06/14
DRAWN	CPG	06/14
CHECKED	GPF	06/14

PARSONS BRINCKERHOFF

ARIZONA DEPARTMENT OF TRANSPORTATION
INTERMODAL TRANSPORTATION DIVISION
ROADWAY DESIGN SECTION

PROFILE SHEET
Sta 406+40 to Sta 417+40

ROUTE | LOCATION: PRESCOTT VALLEY PIPELINE & CENTRAL CORE MULTI-USE PATHS (PIPELINE PHASE 1)

Registered Professional Engineer (Civil) CERTIFICATE NO. 49430 GREGORY PATRICK FLY ARIZONA U.S.A.
Expires 3/31/2015

DWG NO. C1-2.08

TRACS NO. SL680 01C | TEA-PRV-0(205)T | ____ OF ____

9/12/2014 T:\Prescott_MUP\SL622_ph1\MUP\SL622_prf04.dgn

F.H.W.A. REGION	STATE	PROJECT NO.	SHEET NO.	TOTAL SHEETS	AS BUILT
9	ARIZ.	TEA-PRV-0(205)T			

PRV 0000 YV

NOTES:

1. See DWG NO. S1-1.30 to S1-1.33 for retaining wall information.

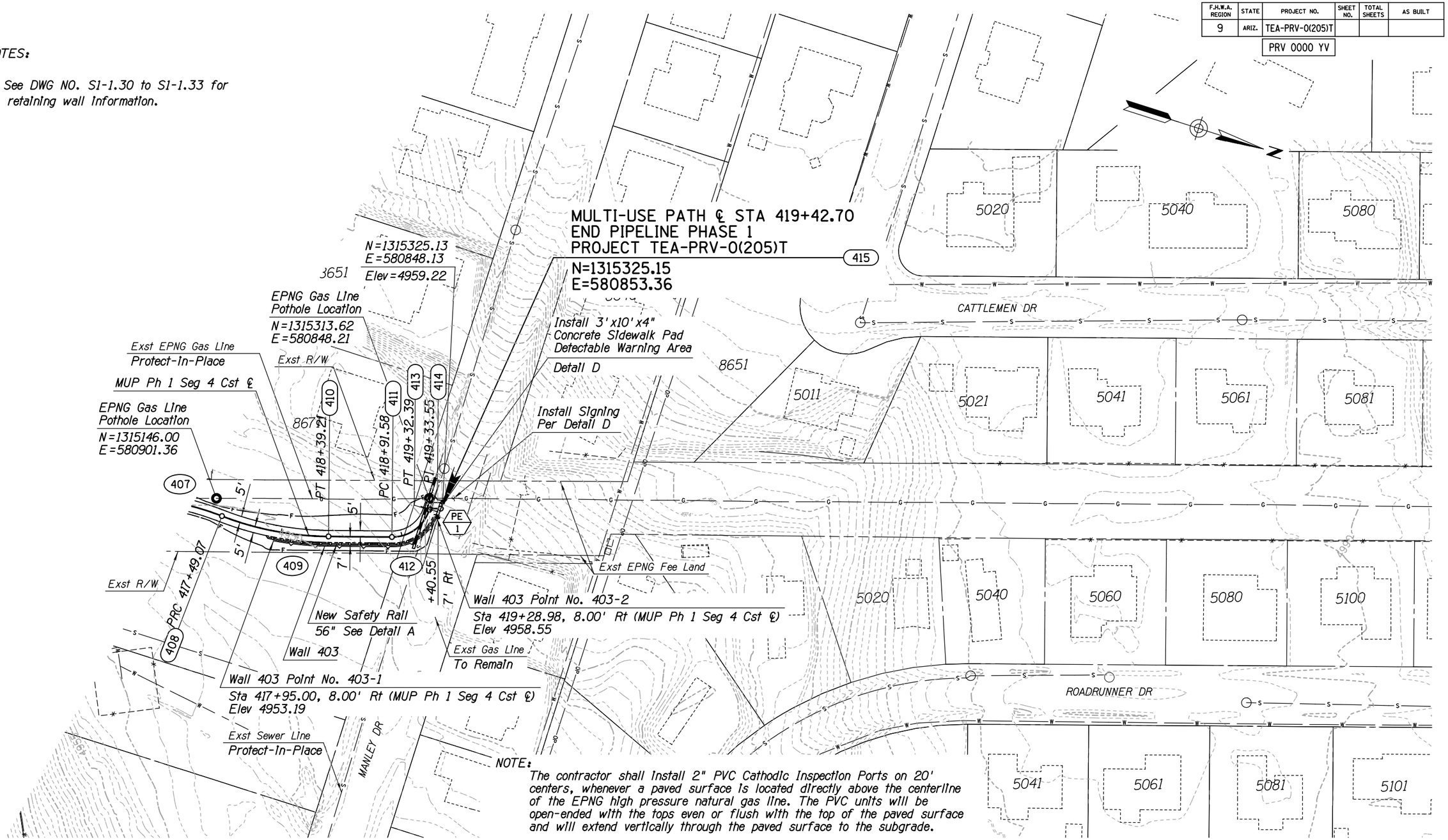

NOTE:
Caution, EPNG high pressure natural gas line present. EPNG Supervisor should be contacted at 928-527-6535 a minimum of 72 hours prior to any construction activities inside EPNG property.

NOTE:
The contractor shall install 2" PVC Cathodic Inspection Ports on 20' centers, whenever a paved surface is located directly above the centerline of the EPNG high pressure natural gas line. The PVC units will be open-ended with the tops even or flush with the top of the paved surface and will extend vertically through the paved surface to the subgrade.

The contractor shall install 1/2" PVC Sniffer Units on 40' centers, whenever a paved surface is located within 10' of the EPNG high pressure natural gas line. The PVC units will be open-ended with the tops even or flush with the top of the paved surface and will extend vertically through the paved surface to the subgrade.

The PVC Sniffer Units and PVC Cathodic Inspection Ports shall be filled with Roadway Embankment Material.

	NAME	DATE
DESIGN	SMG	06/14
DRAWN	CPG	06/14
CHECKED	GPF	06/14

PARSONS BRINCKERHOFF

ARIZONA DEPARTMENT OF TRANSPORTATION
INTERMODAL TRANSPORTATION DIVISION
ROADWAY DESIGN SECTION

PLAN SHEET
Sta 417+40 to Sta 419+42.70

Registered Professional Engineer (Civil) CERTIFICATE NO. 49430 GREGORY PATRICK FLY ARIZONA U.S.A. Expires 3/31/2015

ROUTE | LOCATION PRESCOTT VALLEY PIPELINE & CENTRAL CORE MULTI-USE PATHS (PIPELINE PHASE 1)

DWG NO. C1-2.09

TRACS NO. SL680 01C | TEA-PRV-0(205)T | ___ OF ___

F.H.W.A. REGION	STATE	PROJECT NO.	SHEET NO.	TOTAL SHEETS	AS BUILT
9	ARIZ.	TEA-PRV-0(205)T			

PRV 0000 YV

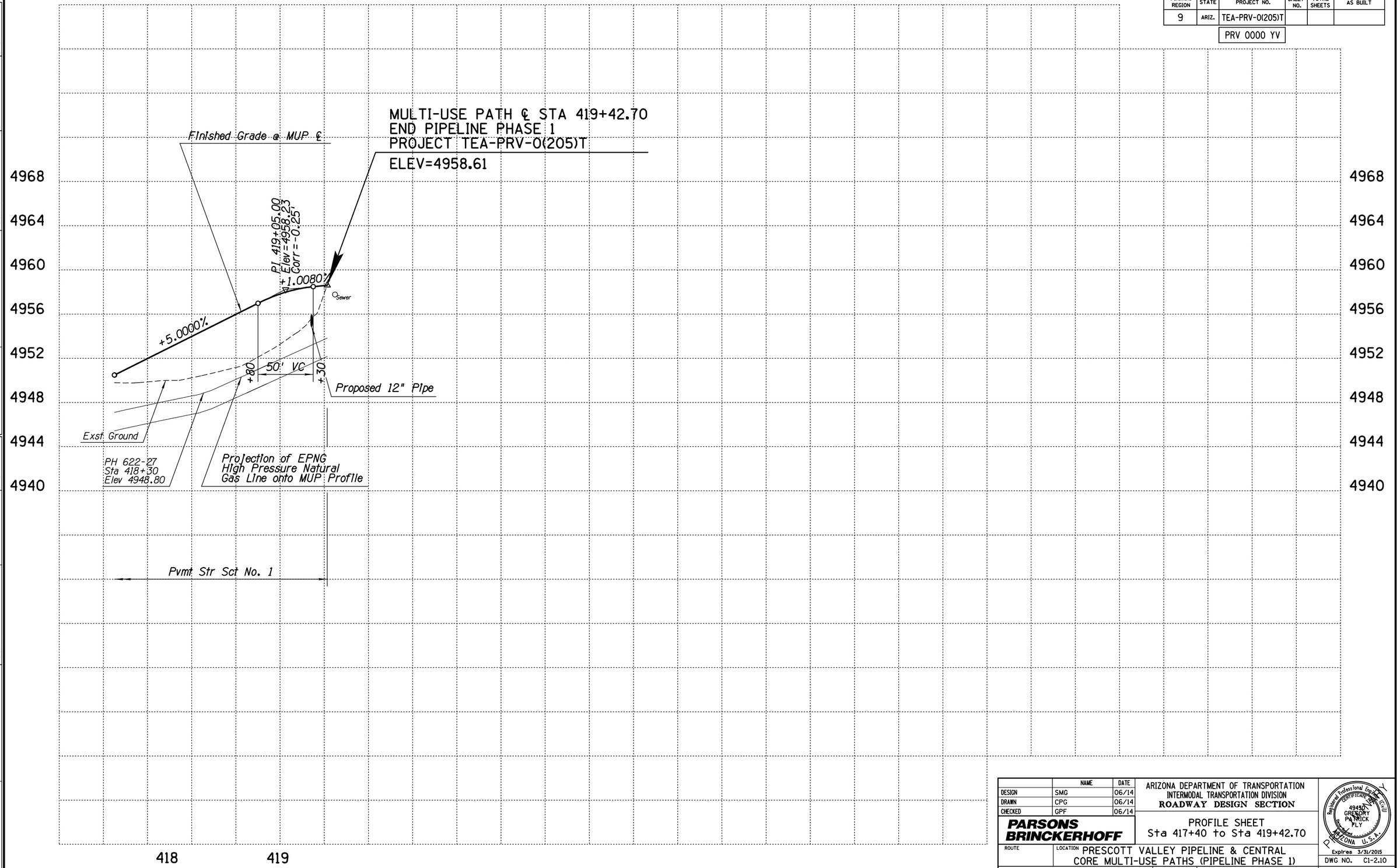

	NAME	DATE
DESIGN	SMG	06/14
DRAWN	CPG	06/14
CHECKED	GPF	06/14

PARSONS BRINCKERHOFF

ARIZONA DEPARTMENT OF TRANSPORTATION
INTERMODAL TRANSPORTATION DIVISION
ROADWAY DESIGN SECTION

PROFILE SHEET
Sta 417+40 to Sta 419+42.70

ROUTE | LOCATION PRESCOTT VALLEY PIPELINE & CENTRAL CORE MULTI-USE PATHS (PIPELINE PHASE 1)

Registered Professional Engineer (Civil) CERTIFICATE NO. 49430 GREGORY PATRICK FLY ARIZONA U.S.A.
Expires 3/31/2015

DWG NO. C1-2.10

TRACS NO. SL680 01C | TEA-PRV-0(205)T | ___ OF ___

9/12/2014 T:\Prescott_MUP\SL622_ph1\MUP\SL622_prf05.dgn

DATE- LOCATION- REVISIONS- FINISHED PLANS- SURVEY NO.

F.H.W.A. REGION	STATE	PROJECT NO.	SHEET NO.	TOTAL SHEETS	AS BUILT
9	ARIZ.	TEA-PRV-0(205)T			
		PRV 0000 YV			

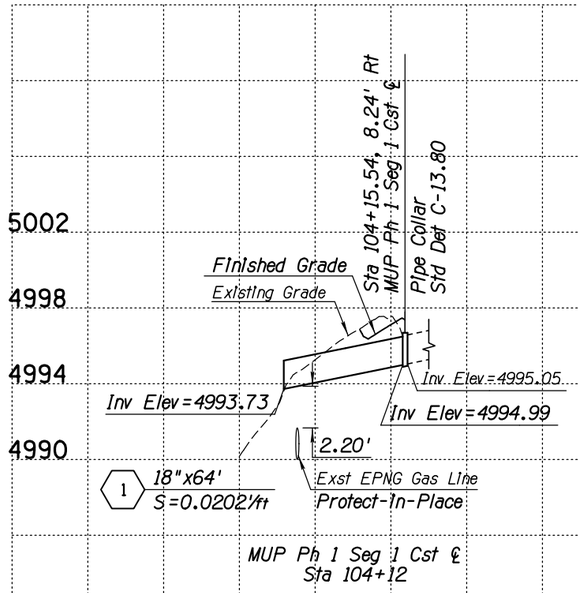

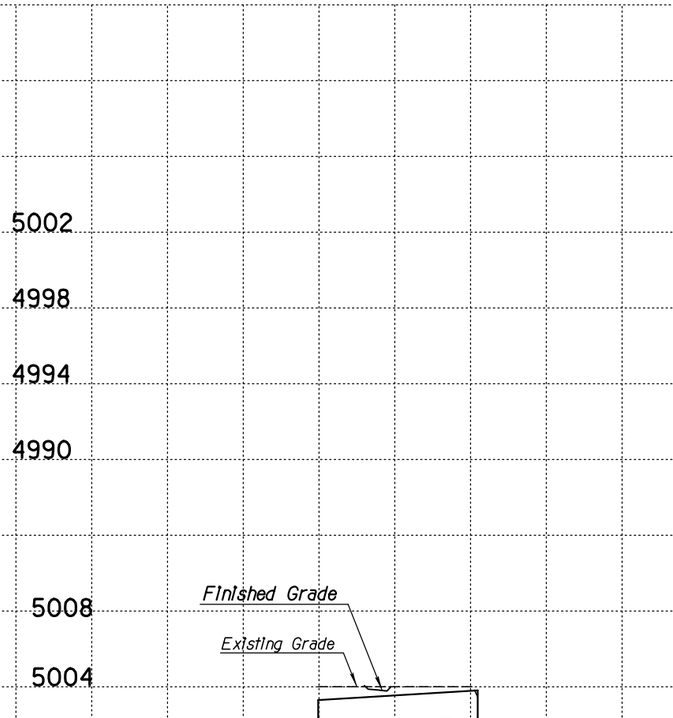

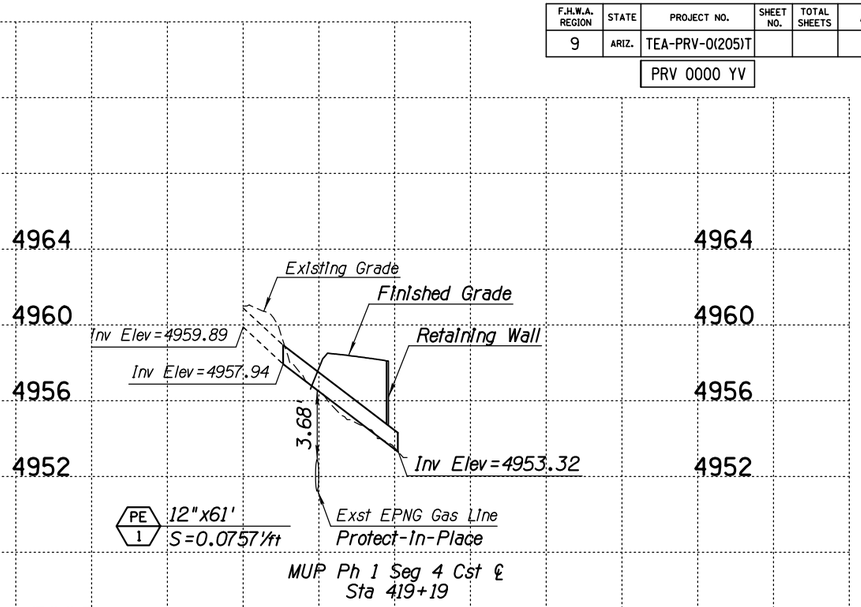

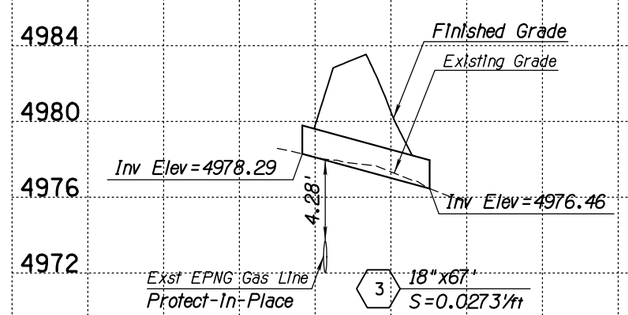

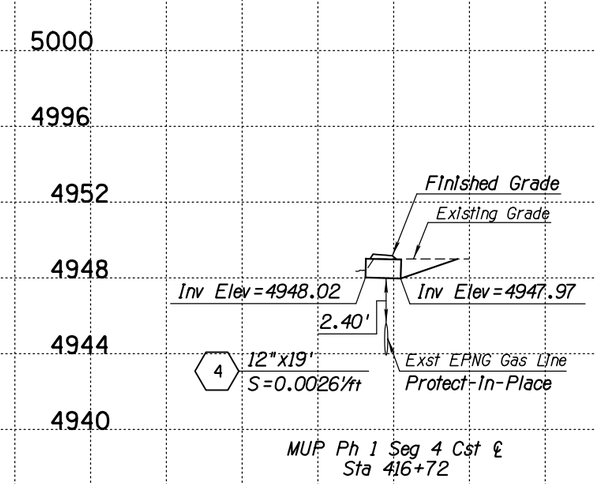

Note:

Contractor shall maintain at least 2' of separation between storm drain pipes and existing EPNG gas line.

	NAME	DATE
DESIGN	SMG	06/14
DRAWN	CPG	06/14
CHECKED	GPF	06/14

PARSONS BRINCKERHOFF

ARIZONA DEPARTMENT OF TRANSPORTATION
INTERMODAL TRANSPORTATION DIVISION
ROADWAY DESIGN SECTION

PIPE PROFILES

Registered Professional Engineer (Civil) CERTIFICATE NO. 49430 GREGORY PATRICK FLY ARIZONA U.S.A.
Expires 3/31/2015

ROUTE | LOCATION PRESCOTT VALLEY PIPELINE & CENTRAL CORE MULTI-USE PATHS (PIPELINE PHASE 1)

DWG NO. D1-1.01

TRACS NO. SL680 01C | TEA-PRV-0(205)T | ___ OF ___

F.H.W.A. REGION	STATE	PROJECT NO.	SHEET NO.	TOTAL SHEETS	AS BUILT
9	ARIZ.	TEA-PRV-0(205)T			
		PRV 0000 YV			

SIGNING GENERAL NOTES:

1. ALL SIGNS SHALL BE IN COMPLIANCE WITH THE MANUAL ON UNIFORM TRAFFIC CONTROL DEVICES (MUTCD), THE ADOT SIGNING AND MARKING STANDARD DRAWINGS, THE ADOT TRAFFIC ENGINEERING MANUAL OF APPROVED SIGNS, THESE PLANS, AND THE SPECIAL PROVISIONS.
2. SIGNING MAY BE MODIFIED AS DIRECTED BY THE ENGINEER. THE ENGINEER MAY SHIFT THE LOCATION OF A SIGN TO A MORE FAVORABLE LOCATION IN ACCORDANCE WITH THE STANDARD DRAWINGS.
3. SHOP DRAWINGS OF THE SIGN PANELS ARE NOT REQUIRED.
4. NORMAL OFFSET FOR ALL SIGNS SHALL BE 12 FEET FROM THE NEAR EDGE OF THE SIGN TO THE EDGE OF THE PAVEMENT UNLESS OTHERWISE NOTED ON THE SIGNING SUMMARY SHEET, ON THE PLANS, OR AS DIRECTED BY THE ENGINEER.
5. ALL SIGN LOCATIONS AND POST LENGTHS ARE APPROXIMATE. THE CONTRACTOR SHALL VERIFY ACTUAL SIGN LOCATIONS WITH THE ENGINEER PRIOR TO CONSTRUCTING THE FOUNDATIONS FOR THE SIGN SUPPORTS. THE CONTRACTOR SHALL VERIFY ACTUAL POST LENGTHS AFTER FINAL GRADING.
6. NORMAL MOUNTING HEIGHT FOR THE BOTTOM OF THE LOWEST SIGN ON THE POST SHALL BE SEVEN FEET ABOVE THE NEAREST SHOULDER EDGE OR TOP OF CURB ELEVATION. THE BOTTOM OF THE SIGN SHALL BE AT LEAST 7 FEET ABOVE THE GROUND UNDER THE SIGN.
7. THE CONTRACTOR SHALL REMOVE EXISTING SIGNING WHERE INDICATED ON THE PLAN SHEET. FOUNDATIONS OF EXISTING SIGNS THAT ARE TO BE REMOVED OR RELOCATED SHALL BE REMOVED A MINIMUM OF 2 FEET BELOW FINISHED GRADE.
8. THE CONTRACTOR SHALL INVENTORY ALL SIGNS TO REMAIN OR BE RELOCATED, AND NOTE DAMAGED SIGNS TO THE ENGINEER BEFORE CONSTRUCTION BEGINS. ALL SIGNS SUBSEQUENTLY DAMAGED SHALL BE REPLACED BY THE CONTRACTOR AT NO COST TO THE DEPARTMENT.
9. ALL NEW SIGNS SHALL BE INSTALLED ON NEW SQUARE TUBE POSTS WITH FOUNDATIONS AS INDICATED IN STD DWGS S-1 AND S-3.
10. ALL METAL HARDWARE SHALL BE STAINLESS STEEL, GALVANIZED CADMIUM PLATED OR ALUMINUM TO PREVENT RUST.
11. ALL SIGNS SHALL BE FABRICATED OF FLAT SHEET ALUMINUM PANELS WITH DIRECT APPLIED OR SILK SCREENED COPY PER SECTIONS 608-2.07 AND 608-2.09 OF THE SPECIFICATIONS. ALL SIGNS SHALL MEET THE CRITERIA ESTABLISHED FOR TYPE IX OR XI SHEETING.
12. QUANTITIES ARE APPROXIMATE AND FOR THE CONTRACTOR'S INFORMATION ONLY.
13. ALL DIMENSIONS ARE IN FEET, UNLESS OTHERWISE NOTED.

SIGNING LEGEND:

⊢●	SIGN
⊢○	EXISTING SIGN

APPROXIMATE SIGNING QUANTITIES

ITEM DESCRIPTION		UNIT	QUANTITY	ITEM NO.
REGULATORY, WARNING OR MARKER SIGN PANEL	TYPE IX OR XI	SQ FT	96	6080005
PERFORATED SIGN POST	2 S	LF	132	6070054
PERFORATED SIGN POST FOUNDATION	CONCRETE	EACH	12	6070060

	NAME	DATE
DESIGN	SMG	06/14
DRAWN	CPG	06/14
CHECKED	GPF	06/14

PARSONS BRINCKERHOFF

ARIZONA DEPARTMENT OF TRANSPORTATION
INTERMODAL TRANSPORTATION DIVISION
ROADWAY DESIGN SECTION

SIGNING PLAN
GENERAL NOTES

Registered Professional Engineer (Civil) CERTIFICATE NO. 49450 GREGORY PATRICK FLY ARIZONA U.S.A. Expires 3/31/2015

ROUTE | LOCATION PRESCOTT VALLEY PIPELINE & CENTRAL CORE MULTI-USE PATHS (PIPELINE PHASE 1)

DWG NO. T1 - 1.01

TRACS NO. SL680 01C | TEA-PRV-0(205)T | ____ OF ____

SURVEY NO. | FINISHED PLANS- | REVISIONS- | LOCATION- | DATE-

Plan Sht No.	Sign Number	MOAS Sign Code	Work: New	Work: Existing: Replace Panel	Work: Existing: Relocate Panel	Work: Existing: Modify Legend	Work: Existing: Remove	Work: Existing: To Remain	Offset (ft)	Mounting Height (ft)	Background Color	Panel: Legend	Panel: Width (in.)	Panel: Height (in.)	Panel: Area (sq. ft.)	Panel: Type	Panel: Bid Item Number	Ground Mounted: Foundations	Ground Mounted: Posts: Type	Ground Mounted: Posts: Total length (ft)	Ground Mounted: New Slipbases	Ground Mounted: Stringer: Type	Ground Mounted: Stringer: Total Length (ft)	Overhead: Structure Type	Overhead: Number of Lights	Remarks
C1-2.01	1	R5-3	X							7	WH	NO MOTOR VEHICLES	24	24	4	RWM	6080005	1	2S	11						BACK TO BACK, SEE DETAIL D
	2	R1-2	X								WH	YIELD	18	15.6	1	RWM	6080005									LOOS DR
C1-2.01																										
	3	W11-15	X							7	YL	TRAIL CROSSING	30	30	7	RWM	6080005	1	2S	11						SEE DETAIL D, LOOS DR
	4	W11-15P	X								YL	TRAIL CROSSING (PLAQUE)	24	12	2	RWM	6080005									
	5	W16-7P	X								YL	DOWNWARD DIRECTIONAL ARROW	24	12	2	RWM	6080005									
C1-2.01	6	R5-3	X							7	WH	NO MOTOR VEHICLES	24	24	4	RWM	6080005	1	2S	11						BACK TO BACK, SEE DETAIL D
	7	R1-2	X								WH	YIELD	18	15.6	1	RWM	6080005									LOOS DR
C1-2.01	8	W11-15	X							7	YL	TRAIL CROSSING	30	30	7	RWM	6080005	1	2S	11						SEE DETAIL D, LOOS DR
	9	W11-15P	X								YL	TRAIL CROSSING (PLAQUE)	24	12	2	RWM	6080005									
	10	W16-7P	X								YL	DOWNWARD DIRECTIONAL ARROW	24	12	2	RWM	6080005									
C1-2.05	1	R5-3	X							7	WH	NO MOTOR VEHICLES	24	24	4	RWM	6080005	1	2S	11						BACK TO BACK, SEE DETAIL D
	2	R1-2	X								WH	YIELD	18	15.6	1	RWM	6080005									PARENT RD
C1-2.05																										
	3	W11-15	X							7	YL	TRAIL CROSSING	30	30	7	RWM	6080005	1	2S	11						SEE DETAIL D, PARENT RD
	4	W11-15P	X								YL	TRAIL CROSSING (PLAQUE)	24	12	2	RWM	6080005									
	5	W16-7P	X								YL	DOWNWARD DIRECTIONAL ARROW	24	12	2	RWM	6080005									
C1-2.05	6	R5-3	X							7	WH	NO MOTOR VEHICLES	24	24	4	RWM	6080005	1	2S	11						BACK TO BACK, SEE DETAIL D
	7	R1-2	X								WH	YIELD	18	15.6	1	RWM	6080005									PARENT RD
C1-2.05	8	W11-15	X							7	YL	TRAIL CROSSING	30	30	7	RWM	6080005	1	2S	11						SEE DETAIL D, PARENT RD
	9	W11-15P	X								YL	TRAIL CROSSING (PLAQUE)	24	12	2	RWM	6080005									
	10	W16-7P	X								YL	DOWNWARD DIRECTIONAL ARROW	24	12	2	RWM	6080005									
C1-2.05	1	R5-3	X							7	WH	NO MOTOR VEHICLES	24	24	4	RWM	6080005	1	2S	11						BACK TO BACK, SEE DETAIL D
	2	R1-2	X								WH	YIELD	18	15.6	1	RWM	6080005									SPOUSE DR
C1-2.05																										
	3	W11-15	X							7	YL	TRAIL CROSSING	30	30	7	RWM	6080005	1	2S	11						SEE DETAIL D, SPOUSE DR
	4	W11-15P	X								YL	TRAIL CROSSING (PLAQUE)	24	12	2	RWM	6080005									
	5	W16-7P	X								YL	DOWNWARD DIRECTIONAL ARROW	24	12	2	RWM	6080005									

F.H.W.A. REGION	STATE	PROJECT NO.	SHEET NO.	TOTAL SHEETS	AS BUILT
9	ARIZ.	TEA-PRV-0(205)T			
		PRV 0000 YV			

Notes:

1. The Engineer shall verify post lengths and elevations.
2. The Engineer may shift a sign in order to achieve a more desirable location.
3. Quantities are approximate and for the contractor's information only.

Panel Types:

RWM: Regulatory, Warning or Marker
F-DA: Flat-sheet aluminum with direct applied or silk-screened characters
F-Dem: Flat-sheet aluminum with demountable characters
Ext: Aluminum extrusions

Sheeting Type:
See Special Provisions Section 1007

Stringer Types:
P:Square-tube post
T:T-Section

Post Types:
2S-2" Single
2T-2" Telescoping
2 1/2S-2½" Single
2 1/2T-2½" Telescoping

	NAME	DATE
DESIGN	JKF	06/14
DRAWN	CPG	06/14
CHECKED	GPF	06/14

PARSONS BRINCKERHOFF

ARIZONA DEPARTMENT OF TRANSPORTATION
INTERMODAL TRANSPORTATION DIVISION

SIGN SUMMARY SHEET

ROUTE | LOCATION: PRESCOTT VALLEY PIPELINE & CENTRAL CORE MULTI-USE PATHS (PIPELINE PHASE 1)

TRACS NO. SL680 01C | TEA-PRV-0(205)T

Registered Professional Engineer (Civil) CERTIFICATE NO. 49430 GREGORY PATRICK FLY ARIZONA U.S.A. Expires 3/31/2015

DWG NO. T1-2.01

____ OF ____

DATE | DESCRIPTION OF REVISION | MADE BY | NO.1 | NO.2

$DATE$ 9/12/2014 I:\Prescott_MUP\SL622_ph1\Pvmk-Sign-MOT\SL622_ssum01.dgn

Plan Sht No.	Sign Number	MOAS Sign Code	Work: New	Work: Existing: Replace Panel	Work: Existing: Relocate Panel	Work: Existing: Modify Legend	Work: Existing: Remove	Work: Existing: To Remain	Offset (ft)	Mounting Height (ft)	Background Color	Panel: Legend	Panel: Width (in.)	Panel: Height (in.)	Panel: Area (sq. ft.)	Panel: Type	Panel: Bid Item Number	Ground Mounted: Foundations	Ground Mounted: Posts: Type	Ground Mounted: Posts: Total length (ft)	Ground Mounted: New Slipbases	Ground Mounted: Stringer: Type	Ground Mounted: Stringer: Total Length (ft)	Overhead: Structure Type	Overhead: Number of Lights	Remarks
C1-2.05	6	R5-3	X							7	WH	NO MOTOR VEHICLES	24	24	4	RWM	6080005	1	2S	11						BACK TO BACK, SEE DETAIL D
	7	R1-2	X								WH	YIELD	18	15.6	1	RWM	6080005									PARENT RD
C1-2.05	8	W11-15	X							7	YL	TRAIL CROSSING	30	30	7	RWM	6080005	1	2S	11						SEE DETAIL D, PARENT RD
	9	W11-15P	X								YL	TRAIL CROSSING (PLAQUE)	24	12	2	RWM	6080005									
	10	W16-7P	X								YL	DOWNWARD DIRECTIONAL ARROW	24	12	2	RWM	6080005									
																										FOR MANLEY DR QUANTITIES
																										SEE SEGMENT 2 T1-2.01

F.H.W.A. REGION	STATE	PROJECT NO.	SHEET NO.	TOTAL SHEETS	AS BUILT
9	ARIZ.	TEA-PRV-0(205)T			
		PRV 0000 YV			

Notes:

1. The Engineer shall verify post lengths and elevations.
2. The Engineer may shift a sign in order to achieve a more desirable location.
3. Quantities are approximate and for the contractor's information only.

Panel Types:

RWM: Regulatory, Warning or Marker
F-DA: Flat-sheet aluminum with direct applied or silk-screened characters
F-Dem: Flat-sheet aluminum with demountable characters
Ext: Aluminum extrusions

Sheeting Type:
See Special Provisions Section 1007

Stringer Types:
P:Square-tube post
T:T-Section

Post Types:
2S-2" Single
2T-2" Telescoping
2 1/2S-2½" Single
2 1/2T-2½" Telescoping

	NAME	DATE
DESIGN	JKF	06/14
DRAWN	CPG	06/14
CHECKED	GPF	06/14

PARSONS BRINCKERHOFF

ARIZONA DEPARTMENT OF TRANSPORTATION
INTERMODAL TRANSPORTATION DIVISION

SIGN SUMMARY SHEET

ROUTE | LOCATION PRESCOTT VALLEY PIPELINE & CENTRAL CORE MULTI-USE PATHS (PIPELINE PHASE 1)

Registered Professional Engineer (Civil) CERTIFICATE NO. 49450 GREGORY PATRICK FLY ARIZONA U.S.A. Expires 3/31/2015

DWG NO. T1-2.02

TRACS NO. SL680 01C | TEA-PRV-0(205)T | ___ OF ___

MADE BY | DATE | NO.1 | DESCRIPTION OF REVISION | NO.2 | DESCRIPTION OF REVISION

F.H.W.A. REGION	STATE	PROJECT NO.	SHEET NO.	TOTAL SHEETS	AS BUILT
9	ARIZ.	TEA-PRV-0(205)T			
		PRV 0000 YV			

TRAFFIC CONTROL GENERAL NOTES:

1. THE TRAFFIC CONTROL PLANS REPRESENT A SUGGESTED METHOD FOR TRAFFIC CONTROL DURING CONSTRUCTION. THE CONTRACTOR SHALL PREPARE TRAFFIC CONTROL PLANS IN ACCORDANCE WITH SECTION 701 OF THE SPECIFICATIONS. ALL TRAFFIC CONTROL PLANS ARE SUBJECT TO THE APPROVAL OF THE ENGINEER BEFORE BEGINNING CONSTRUCTION.
2. ADJUSTMENTS TO THE DETAILS PROVIDED OF THESE TRAFFIC CONTROL PLANS AND REQUIREMENTS MAY BE NECESSARY DUE TO CONSTRUCTION ACTIVITIES, AS DIRECTED BY THE ENGINEER.
3. THE CONTRACTOR SHALL MAINTAIN TWO-WAY TRAFFIC ON ALL STREETS AT ALL TIMES OR AS DIRECTED BY THE ENGINEER.
4. THE CONTRACTOR SHALL MAINTAIN ACCESS TO ALL LOCAL BUSINESSES.
5. THE CONTRACTOR SHALL MAINTAIN TRAFFIC ON A PAVED SURFACE AT ALL TIMES.
6. ALL EXISTING REGULATORY, WARNING AND MARKING SIGNS IN CONFLICT WITH THE TRAFFIC CONTROL SIGNS SHALL BE REMOVED, RELOCATED OR COVERED IN PLACE, AS DIRECTED BY THE ENGINEER. THE CONTRACTOR SHALL STORE AND REINSTALL ITEMS WHICH HAVE BEEN REMOVED OR RELOCATED IN A MANNER APPROVED BY THE ENGINEER AT NO ADDITIONAL COST TO THE DEPARTMENT.
7. SPEED LIMIT SIGNING IS PRELIMINARY AND IS SUBJECT TO REVIEW AND CHANGE BY THE ENGINEER AS DICTATED BY FIELD CONDITIONS.
8. USE DOUBLE FINES SIGNING WHEN WORKERS ARE PRESENT. SEE FIGURE SA-12 OF THE ADOT TRAFFIC CONTROL DESIGN GUIDELINES 2010.
9. THE RETROREFLECTIVE SHEETING ON ALL CONSTRUCTION SIGNS SHALL MEET THE MINIMUM CRITERIA ESTABLISHED IN SECTION 1007 OF THE SPECIFICATIONS.
10. ALL CONSTRUCTION SIGNS SHALL HAVE BLACK LETTERS ON AN ORANGE BACKGROUND.
11. CONSTRUCTION SIGNS SHALL NOT BE DISPLAYED TO TRAFFIC MORE THAN 24 HOURS PRIOR TO THE ACTUAL START OF CONSTRUCTION. THESE SIGNS MAY BE INSTALLED SOONER BUT THEY MUST BE COVERED OR TURNED AWAY FROM TRAFFIC. THE COST FOR COVERING OR TURNING THEM SHALL BE CONSIDERED PART OF THE SIGN INSTALLATION COST. NO FURTHER COMPENSATION WILL BE MADE. THESE SIGNS SHALL BE REMOVED WITHIN 24 HOURS AFTER COMPLETION OF THE CONSTRUCTION ACTIVITIES.
12. WHEN TRAFFIC CONTROL DEVICES ARE NOT IN USE, THEY SHALL BE MOVED AT LEAST 30 FEET FROM THE ROADWAY, IF POSSIBLE. OTHERWISE THEY SHALL BE COVERED OR TURNED AWAY FROM TRAFFIC.
13. DRUMS, TYPE II BARRICADES AND VERTICAL PANELS SHALL BE PLACED 20 FEET ON CENTER IN TAPERS AND 40 FEET ON CENTER IN TANGENTS.
14. THE CONTRACTOR MAY SUBSTITUTE TYPE I BARRICADES FOR TYPE II BARRICADES AS LONG AS THE REFLECTIVE AREA ON THE TOP PANEL OF THE TYPE I BARRICADE IS EQUIVALENT OR GREATER THAN THE REFLECTIVE AREA OF A TYPE II BARRICADE.
15. FOR TRAFFIC CONTROL LEFT IN PLACE OVER NIGHT, A TYPE C STEADY-BURNING YELLOW LIGHT SHALL BE MOUNTED ON EVERY DRUM, TYPE II BARRICADE, AND VERTICAL PANEL IN TAPERS; AND ON ALTERNATING DRUMS, TYPE II BARRICADES, OR VERTICAL PANELS IN TANGENTS.
16. DURING NIGHTTIME THE CONTRACTOR SHALL NOT UTILIZE CONES FOR CHANNELIZATION DEVICES UNLESS OTHERWISE DIRECTED BY THE ENGINEER.

DESIGN REFERENCES:

MUTCD - MANUAL ON UNIFORM TRAFFIC CONTROL DEVICES PART 6, TEMPORARY TRAFFIC CONTROL, 2009 EDITION AS AMENDED BY THE JANUARY, 2012 ADOT SUPPLEMENT.

TCDG - ADOT TRAFFIC CONTROL DESIGN GUIDELINES, 2010.

	NAME	DATE
DESIGN	SMG	06/14
DRAWN	CPG	06/14
CHECKED	GPF	06/14

PARSONS BRINCKERHOFF

ARIZONA DEPARTMENT OF TRANSPORTATION
INTERMODAL TRANSPORTATION DIVISION
ROADWAY DESIGN SECTION

TRAFFIC CONTROL
GENERAL NOTES

ROUTE | LOCATION PRESCOTT VALLEY PIPELINE & CENTRAL CORE MULTI-USE PATHS (PIPELINE PHASE 1)

Registered Professional Engineer (Civil) CERTIFICATE NO. 49450 GREGORY PATRICK FLY ARIZONA U.S.A.
Expires 3/31/2015

DWG NO. T1 - 3.01

TRACS NO. SL680 01C | TEA-PRV-0(205)T | ____ OF ____

DATE- LOCATION- REVISIONS- FINISHED PLANS- SURVEY NO.

F.H.W.A. REGION	STATE	PROJECT NO.	SHEET NO.	TOTAL SHEETS	AS BUILT
9	ARIZ.	TEA-PRV-0(205)T			
		PRV 0000 YV			

APPROXIMATE TRAFFIC CONTROL QUANTITIES

ITEM NO.	BID ITEM DESCRIPTION	UNITS	CONSTRUCTION ACTIVITIES						
			PHASE 1	PHASE 2	PHASE 3A	PHASE 3B	PHASE 3C	PHASE 3D	TOTALS
	DURATION (CALENDAR DAYS)	DAYS	60	35	10	5	5	5	60
7016030	BARRICADE (VERTICAL PANELS, TYPE II)	EACH-DAY	0	0	750	250	250	250	1,500
7016032	PORTABLE SIGN STANDS (RIGID)	EACH-DAY	1,800	0	120	20	20	10	1,970
7016037	WARNING LIGHTS (TYPE C)	EACH-DAY	0	0	750	250	250	250	1,500
7016051	TEMPORARY SIGN (LESS THAN 10 S.F.)	EACH-DAY	1,800	0	120	20	20	10	1,970

	NAME	DATE
DESIGN	SMG	06/14
DRAWN	CPG	06/14
CHECKED	GPF	06/14

PARSONS BRINCKERHOFF

ARIZONA DEPARTMENT OF TRANSPORTATION
INTERMODAL TRANSPORTATION DIVISION
ROADWAY DESIGN SECTION

TRAFFIC CONTROL PLAN
APPROXIMATE QUANTITIES

Registered Professional Engineer (Civil) CERTIFICATE NO. 49430 GREGORY PATRICK FLY ARIZONA U.S.A.
Expires 3/31/2015

ROUTE | LOCATION PRESCOTT VALLEY PIPELINE & CENTRAL CORE MULTI-USE PATHS (PIPELINE PHASE 1)

DWG NO. T1 - 3.03

TRACS NO. SL680 01C | TEA-PRV-0(205)T | ____ OF ____

DATE- | LOCATION- | REVISIONS- | FINISHED PLANS- | SURVEY NO.

F.H.W.A. REGION	STATE	PROJECT NO.	SHEET NO.	TOTAL SHEETS	AS BUILT
9	ARIZ.	TEA-PRV-0(205)T			
		PRV 0000 YV			

MAINTENANCE OF TRAFFIC

ACTIVITY NO	CONSTRUCTION ACTIVITY	TRAFFIC CONTROL	COMMENTS
1	PHASE 1 ESTABLISH WORK ZONE AT CROSSROADS ADVANCE SIGNING	OPERATION PER MUTCD TYPICAL APPLICATION 1 (TA-1). SETUP PER TA-1 IN EACH TRAVEL DIRECTION IN ADVANCE OF ROADWAY CROSSINGS AND WORK ZONES.	SIGNS ARE TO REMAIN IN PLACE FOR THE DURATION OF THE PIPELINE PHASE 1 PROJECT.
2	PHASE 2 CONSTRUCT MULTI-USE PATH NOT ADJACENT TO EXISTING ROADWAYS	WORK PERFORMED IS NOT LOCATED NEAR EXISTING ROADWAYS. NO ADDITIONAL TRAFFIC CONTROL IS REQUIRED. TRAFFIC CONTROL FOR ACTIVITY 2 IS THE SAME AS PROVIDED UNDER ACTIVITY 1.	WORK SHALL BE COMPLETED FROM 7A TO 7P, MONDAY THRU FRIDAY ONLY. NO NIGHT WORK IS PERMITTED.
3	PHASE 3A CONSTRUCT MULTI-USE PATH INSTALL SIGNAGE AT RANGER RD ALONG NAVAJO DR AND LAKESHORE DR	OPERATION PER MUTCD TYPICAL APPLICATION 1 (TA-1) OR 6 (TA-6). SETUP PER TA-1 OR TA-6 IN EACH TRAVEL DIRECTION IN ADVANCE OF ROADWAY CROSSINGS AND WORK ZONES.	WORK SHALL BE COMPLETED FROM 7A TO 7P, MONDAY THRU FRIDAY ONLY. NO NIGHT WORK IS PERMITTED.
	PHASE 3B CONSTRUCT MULTI-USE PATH INSTALL SIGNAGE AT PARENT RD	OPERATION PER MUTCD TYPICAL APPLICATION 1 (TA-1) OR 6 (TA-6). SETUP PER TA-1 OR TA-6 IN EACH TRAVEL DIRECTION IN ADVANCE OF ROADWAY CROSSINGS AND WORK ZONES.	WORK SHALL BE COMPLETED FROM 7A TO 7P, MONDAY THRU FRIDAY ONLY. NO NIGHT WORK IS PERMITTED.
	PHASE 3C CONSTRUCT MULTI-USE PATH INSTALL SIGNAGE AT SPOUSE DR	OPERATION PER MUTCD TYPICAL APPLICATION 1 (TA-1) OR 6 (TA-6). SETUP PER TA-1 OR TA-6 IN EACH TRAVEL DIRECTION IN ADVANCE OF ROADWAY CROSSINGS AND WORK ZONES.	WORK SHALL BE COMPLETED FROM 7A TO 7P, MONDAY THRU FRIDAY ONLY. NO NIGHT WORK IS PERMITTED.
	PHASE 3D CONSTRUCT MULTI-USE PATH INSTALL SIGNAGE AT MANLEY DR	OPERATION PER MUTCD TYPICAL APPLICATION 1 (TA-1) OR 6 (TA-6). SETUP PER TA-1 OR TA-6 IN EACH TRAVEL DIRECTION IN ADVANCE OF ROADWAY CROSSINGS AND WORK ZONES.	WORK SHALL BE COMPLETED FROM 7A TO 7P, MONDAY THRU FRIDAY ONLY. NO NIGHT WORK IS PERMITTED.

NOTE:

THE ORDER OF CONSTRUCTION ACTIVITIES DOES NOT CONSTITUTE A SEQUENCE OF CONSTRUCTION. THE CONTRACTOR SHALL PERFORM THE WORK IN THE MOST EXPEDITIOUS MANNER CONSISTENT WITH THE PLANS AND SPECIAL PROVISIONS WITH THE APPROVAL OF THE ENGINEER. ANY MODIFICATIONS TO THE ORDER OF CONSTRUCTION ACTIVITIES SHALL REQUIRE REVIEW AND APPROVAL BY THE ENGINEER.

	NAME	DATE
DESIGN	SMG	06/14
DRAWN	CPG	06/14
CHECKED	GPF	06/14

PARSONS BRINCKERHOFF

ARIZONA DEPARTMENT OF TRANSPORTATION
INTERMODAL TRANSPORTATION DIVISION
ROADWAY DESIGN SECTION

TRAFFIC CONTROL PLAN
MAINTENANCE OF TRAFFIC

Registered Professional Engineer (Civil) CERTIFICATE NO. 49430 GREGORY PATRICK FLY ARIZONA U.S.A.
Expires 3/31/2015

ROUTE | LOCATION PRESCOTT VALLEY PIPELINE & CENTRAL CORE MULTI-USE PATHS (PIPELINE PHASE 1)

DWG NO. T1 - 3.02

TRACS NO. SL680 01C | TEA-PRV-0(205)T | ____ OF ____

SURVEY NO. | FINISHED PLANS- | REVISIONS- | LOCATION- | DATE-

F.H.W.A. REGION	STATE	PROJECT NO.	SHEET NO.	TOTAL SHEETS	AS BUILT
9	ARIZ.	TEA-PRV-0(205)T			
		PRV 0000 YV			

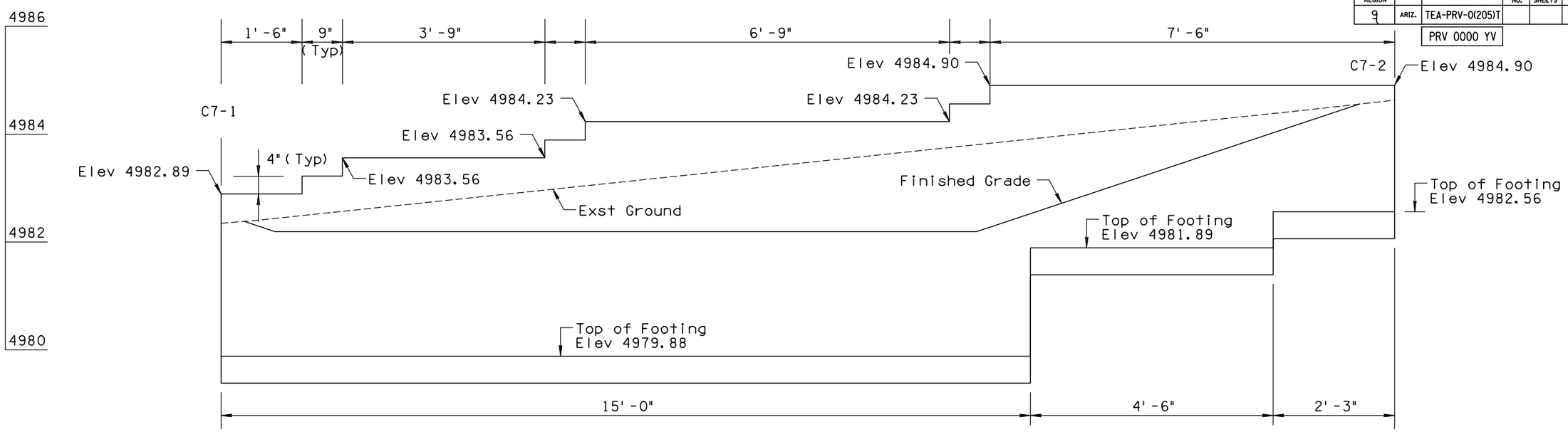

WALL C7

Scale: 1"=1'
Length: 21'-9"
Area: 79.27 sq ft

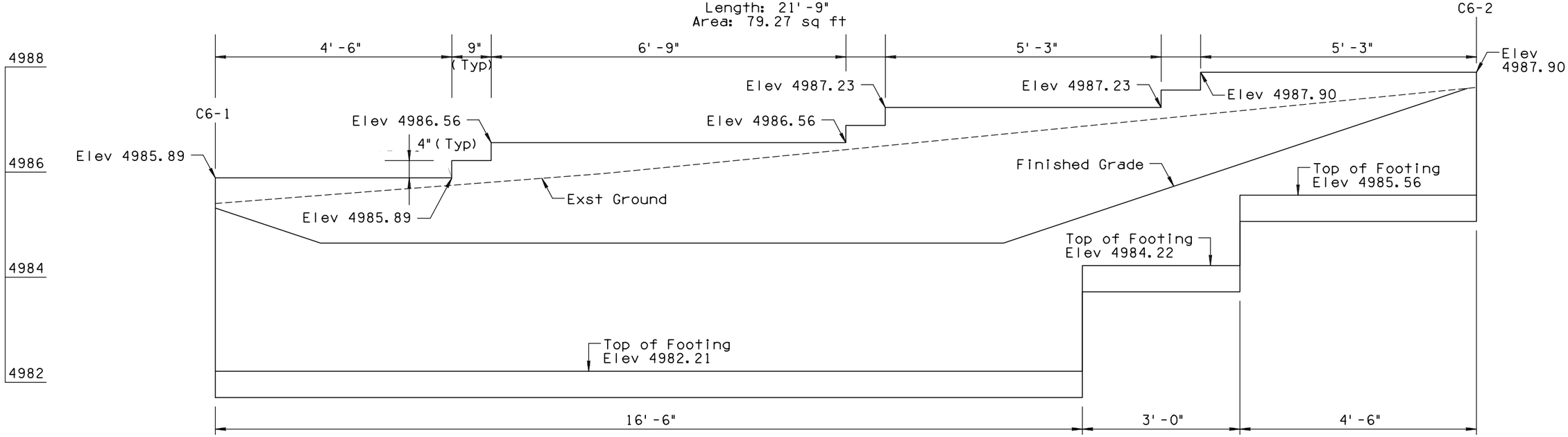

WALL C6

Scale: 1"=1'
Length: 24'-0"
Area: 91.57 sq ft

NOTES:

1. See Detail C for Horizontal Control.
2. See Detail Q for Additional Wall Information.
3. Minimum 1 foot of cover over the Wall Footing.

	NAME	DATE
DESIGN	SMG	06/14
DRAWN	CPG	06/14
CHECKED	GPF	06/14

PARSONS BRINCKERHOFF

ARIZONA DEPARTMENT OF TRANSPORTATION
INTERMODAL TRANSPORTATION DIVISION
ROADWAY DESIGN SECTION

RETAINING WALLS

ROUTE | LOCATION PRESCOTT VALLEY PIPELINE & CENTRAL CORE MULTI-USE PATHS (PIPELINE PHASE 1)

Registered Professional Engineer (Civil) CERTIFICATE NO. 49430 GREGORY PATRICK FLY ARIZONA U.S.A.
Expires 3/31/2015

DWG NO. S1-1.01

TRACS NO. SL680 01C | TEA-PRV-0(205)T | ___ OF ___

DATE- LOCATION- REVISIONS- FINISHED PLANS- SURVEY NO.

NOTE:

1. See Detail C for Horizontal Control.
2. See Detail Q for Additional Wall Information.
3. Minimum 1 foot of cover over the Wall Footing.

F.H.W.A. REGION	STATE	PROJECT NO.	SHEET NO.	TOTAL SHEETS	AS BUILT
9	ARIZ.	TEA-PRV-0(205)T			
		PRV 0000 YV			

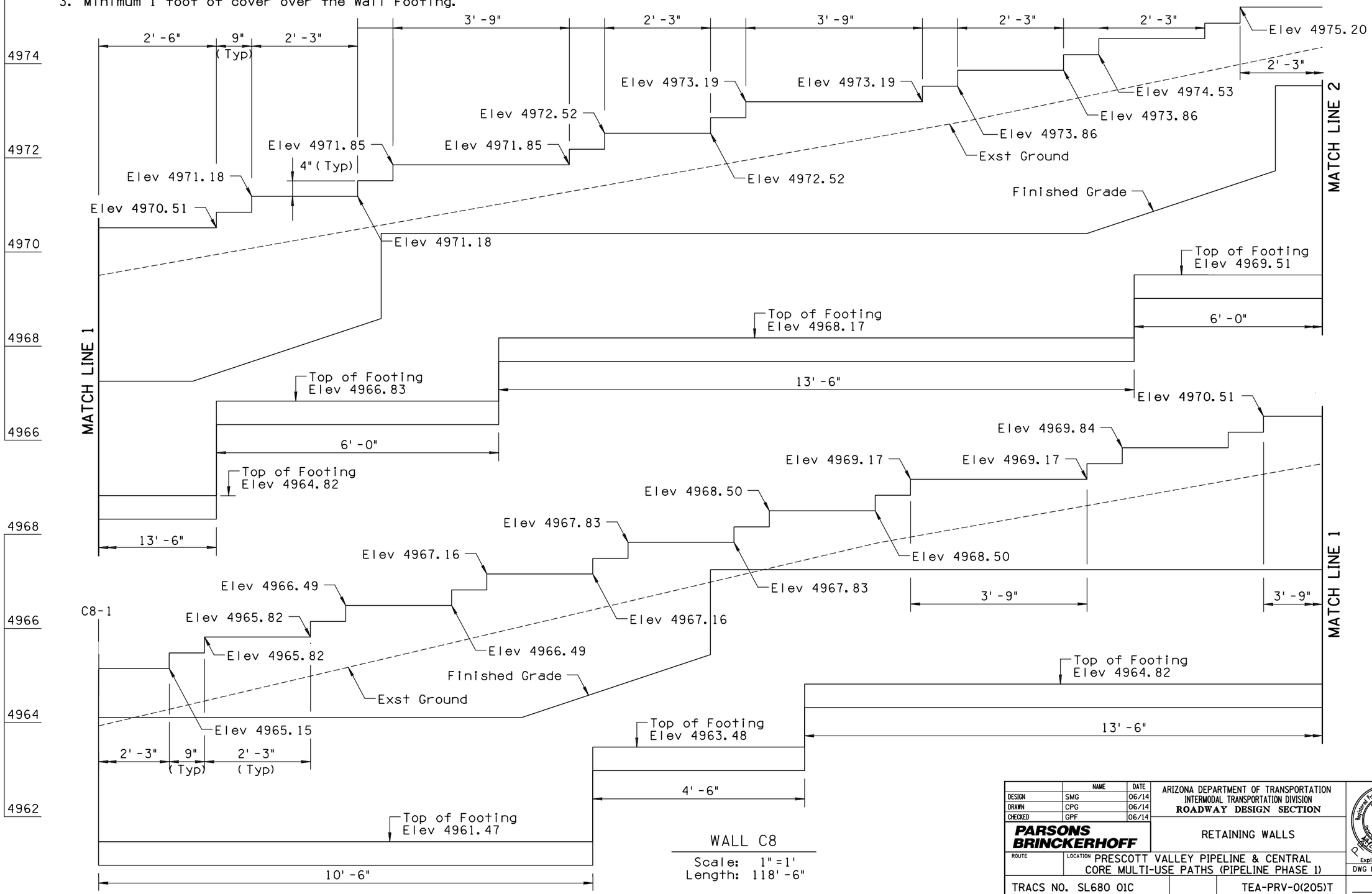

WALL C8

Scale: 1" = 1'
Length: 118' -6"

	NAME	DATE
DESIGN	SMG	06/14
DRAWN	CPG	06/14
CHECKED	GPF	06/14

PARSONS BRINCKERHOFF

ARIZONA DEPARTMENT OF TRANSPORTATION
INTERMODAL TRANSPORTATION DIVISION
ROADWAY DESIGN SECTION

RETAINING WALLS

ROUTE | LOCATION: PRESCOTT VALLEY PIPELINE & CENTRAL CORE MULTI-USE PATHS (PIPELINE PHASE 1)

Registered Professional Engineer (Civil) CERTIFICATE NO. 49430 GREGORY PATRICK FLY ARIZONA U.S.A.
Expires 3/31/2015

DWG NO. S1-1.02

TRACS NO. SL680 01C | TEA-PRV-0(205)T | ___ OF ___

9/12/2014 T:\Prescott_MUP\SL622_ph1\Structures\SL622_wpln07.dgn

DATE- LOCATION- REVISIONS- FINISHED PLANS- SURVEY NO.

F.H.W.A. REGION	STATE	PROJECT NO.	SHEET NO.	TOTAL SHEETS	AS BUILT
9	ARIZ.	TEA-PRV-0(205)T			
		PRV 0000 YV			

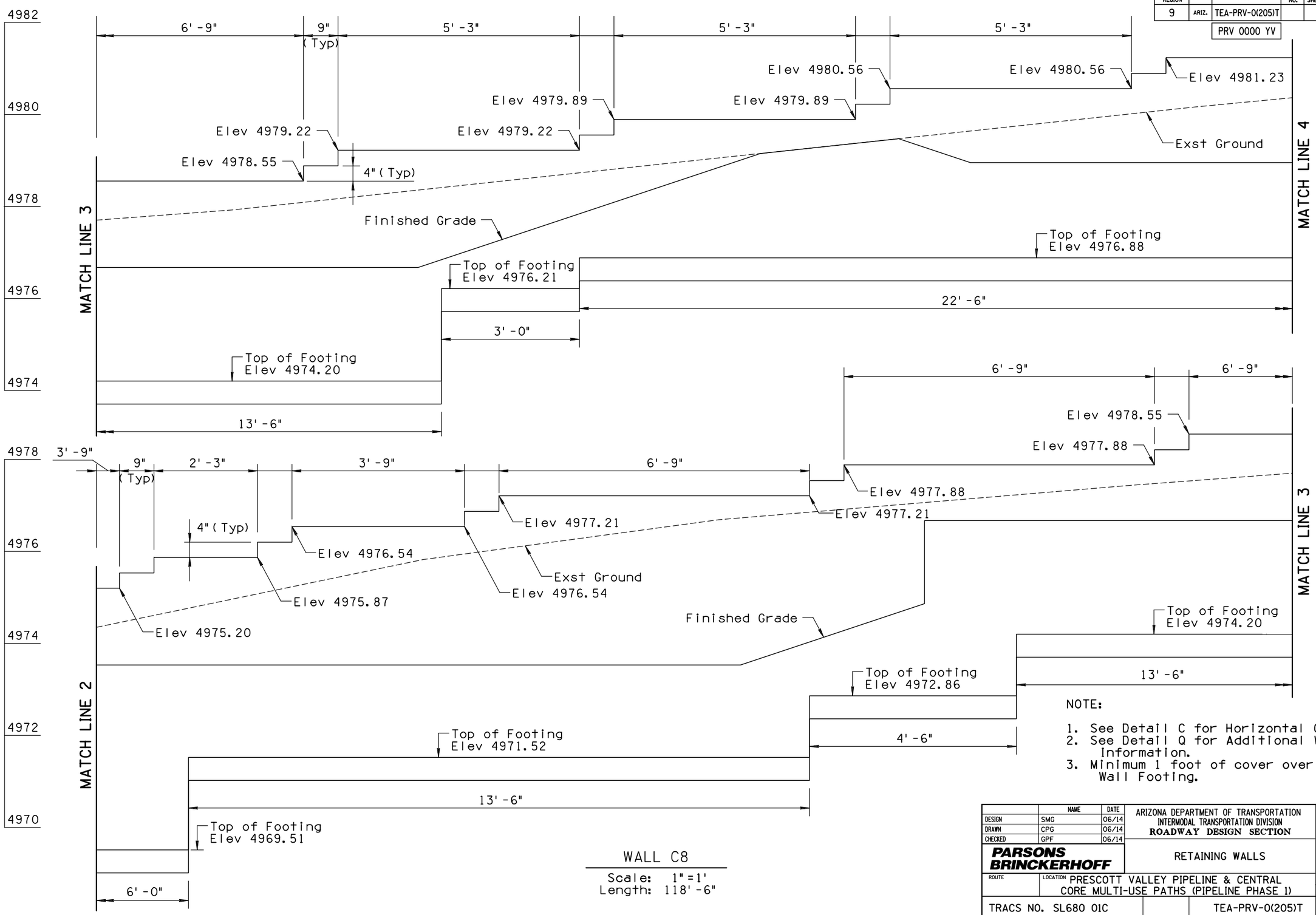

NOTE:

1. See Detail C for Horizontal Control.
2. See Detail Q for Additional Wall Information.
3. Minimum 1 foot of cover over the Wall Footing.

WALL C8

Scale: 1" = 1'
Length: 118' -6"

	NAME	DATE
DESIGN	SMG	06/14
DRAWN	CPG	06/14
CHECKED	GPF	06/14

PARSONS BRINCKERHOFF

ARIZONA DEPARTMENT OF TRANSPORTATION
INTERMODAL TRANSPORTATION DIVISION
ROADWAY DESIGN SECTION

RETAINING WALLS

ROUTE | LOCATION: PRESCOTT VALLEY PIPELINE & CENTRAL CORE MULTI-USE PATHS (PIPELINE PHASE 1)

Registered Professional Engineer (Civil) CERTIFICATE NO. 49430 GREGORY PATRICK FLY ARIZONA U.S.A.
Expires 3/31/2015

DWG NO. S1-1.03

TRACS NO. SL680 01C | TEA-PRV-0(205)T | ___ OF ___

DATE- LOCATION- REVISIONS- FINISHED PLANS- SURVEY NO.

9/12/2014 T:\Prescott_MUP\SL622_ph1\Structures\SL622_wpln08.dgn

F.H.W.A. REGION	STATE	PROJECT NO.	SHEET NO.	TOTAL SHEETS	AS BUILT
9	ARIZ.	TEA-PRV-0(205)T			
		PRV 0000 YV			

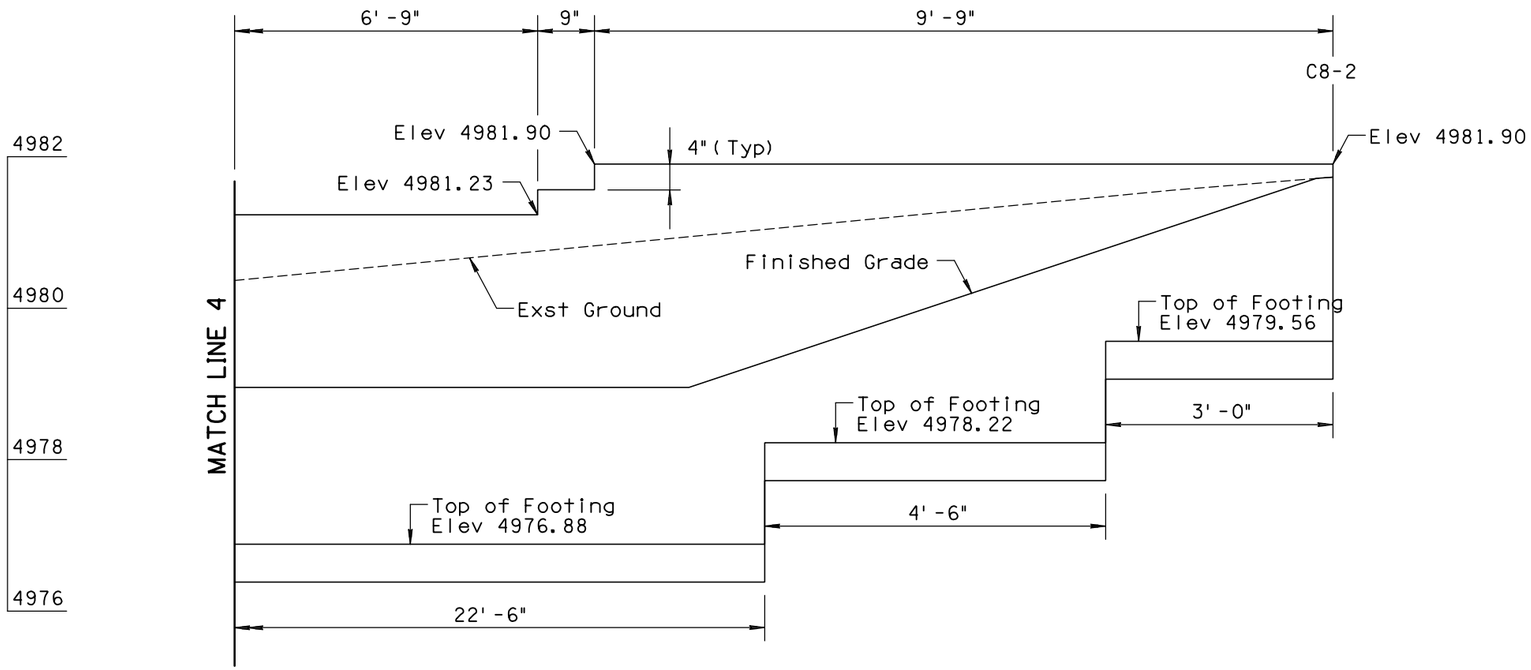

WALL C8

Scale: 1"=1'
Length: 118'-6"
Area: 534.23 sq ft

NOTE:

1. See Detail C for Horizontal Control.
2. See Detail Q for Additional Wall Information.
3. Minimum 1 foot of cover over the Wall Footing.

	NAME	DATE
DESIGN	SMG	06/14
DRAWN	CPG	06/14
CHECKED	GPF	06/14

PARSONS BRINCKERHOFF

ARIZONA DEPARTMENT OF TRANSPORTATION
INTERMODAL TRANSPORTATION DIVISION
ROADWAY DESIGN SECTION

RETAINING WALLS

ROUTE | LOCATION PRESCOTT VALLEY PIPELINE & CENTRAL CORE MULTI-USE PATHS (PIPELINE PHASE 1)

Registered Professional Engineer (Civil) CERTIFICATE NO. 49430 GREGORY PATRICK FLY ARIZONA U.S.A.
Expires 3/31/2015

DWG NO. S1-1.04

TRACS NO. SL680 01C | TEA-PRV-0(205)T | ___ OF ___

DATE- LOCATION- REVISIONS- FINISHED PLANS- SURVEY NO.

F.H.W.A. REGION	STATE	PROJECT NO.	SHEET NO.	TOTAL SHEETS	AS BUILT
9	ARIZ.	TEA-PRV-0(205)T			

PRV 0000 YV

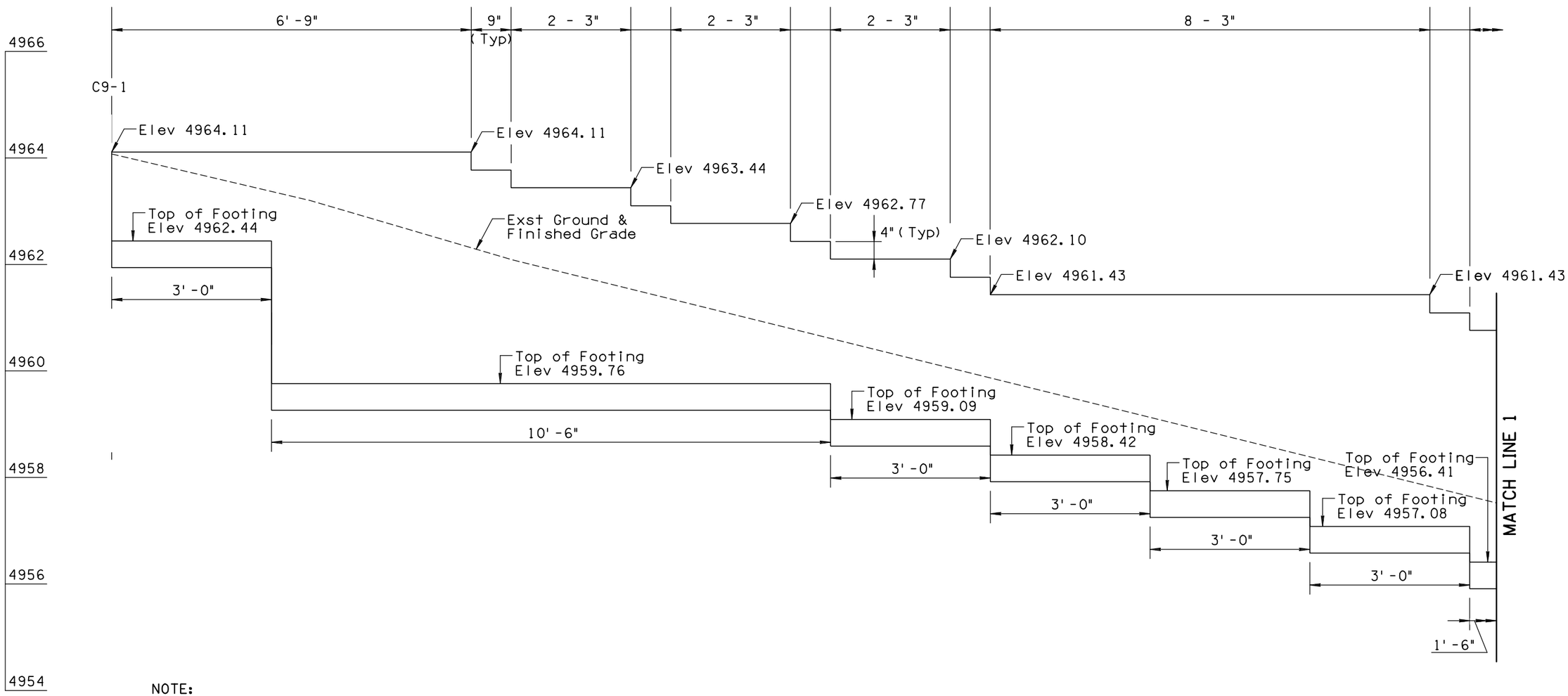

NOTE:

1. See Detail C for Horizontal Control.
2. See Detail Q for Additional Wall Information.
3. Minimum 1 foot of cover over the Wall Footing.

WALL C9

Scale: 1" = 1'
Length: 67'-6"

	NAME	DATE
DESIGN	SMG	06/14
DRAWN	CPG	06/14
CHECKED	GPF	06/14

PARSONS BRINCKERHOFF

ARIZONA DEPARTMENT OF TRANSPORTATION
INTERMODAL TRANSPORTATION DIVISION
ROADWAY DESIGN SECTION

RETAINING WALLS

ROUTE | LOCATION PRESCOTT VALLEY PIPELINE & CENTRAL CORE MULTI-USE PATHS (PIPELINE PHASE 1)

Registered Professional Engineer (Civil) CERTIFICATE NO. 49430 GREGORY PATRICK FLY ARIZONA U.S.A.
Expires 3/31/2015

DWG NO. S1-1.05

TRACS NO. SL680 01C | TEA-PRV-0(205)T | ___ OF ___

DATE- LOCATION- REVISIONS- FINISHED PLANS- SURVEY NO.

9/12/2014 T:\Prescott_MUP\SL622_ph1\Structures\SL622_wpln10.dgn

F.H.W.A. REGION	STATE	PROJECT NO.	SHEET NO.	TOTAL SHEETS	AS BUILT
9	ARIZ.	TEA-PRV-0(205)T			
		PRV 0000 YV			

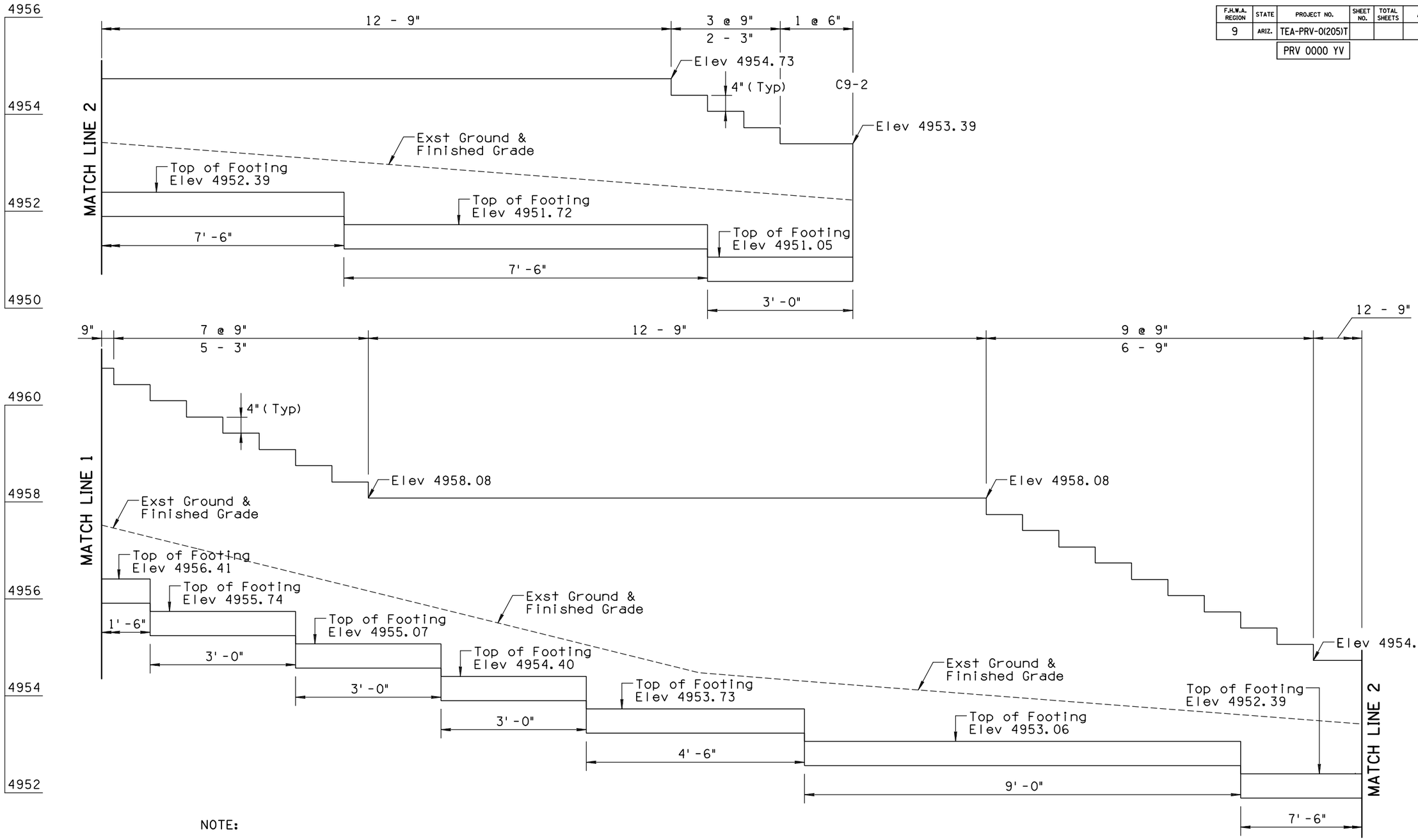

NOTE:

1. See Detail C for Horizontal Control.
2. See Detail Q for Additional Wall Information.
3. Minimum 1 foot of cover over the Wall Footing.

WALL C9

Scale: 1" = 1'
Length: 67' -6"
Area: 230.25 sq ft

	NAME	DATE
DESIGN	SMG	06/14
DRAWN	CPG	06/14
CHECKED	GPF	06/14

PARSONS BRINCKERHOFF

ARIZONA DEPARTMENT OF TRANSPORTATION
INTERMODAL TRANSPORTATION DIVISION
ROADWAY DESIGN SECTION

RETAINING WALLS

ROUTE | LOCATION PRESCOTT VALLEY PIPELINE & CENTRAL CORE MULTI-USE PATHS (PIPELINE PHASE 1)

Registered Professional Engineer (Civil) CERTIFICATE NO. 49450 GREGORY PATRICK FLY ARIZONA U.S.A.
Expires 3/31/2015

DWG NO. S1-1.06

TRACS NO. SL680 01C | TEA-PRV-0(205)T | ____ OF ____

DATE- LOCATION- REVISIONS- FINISHED PLANS- SURVEY NO.

F.H.W.A. REGION	STATE	PROJECT NO.	SHEET NO.	TOTAL SHEETS	AS BUILT
9	ARIZ.	TEA-PRV-0(205)T			

PRV 0000 YV

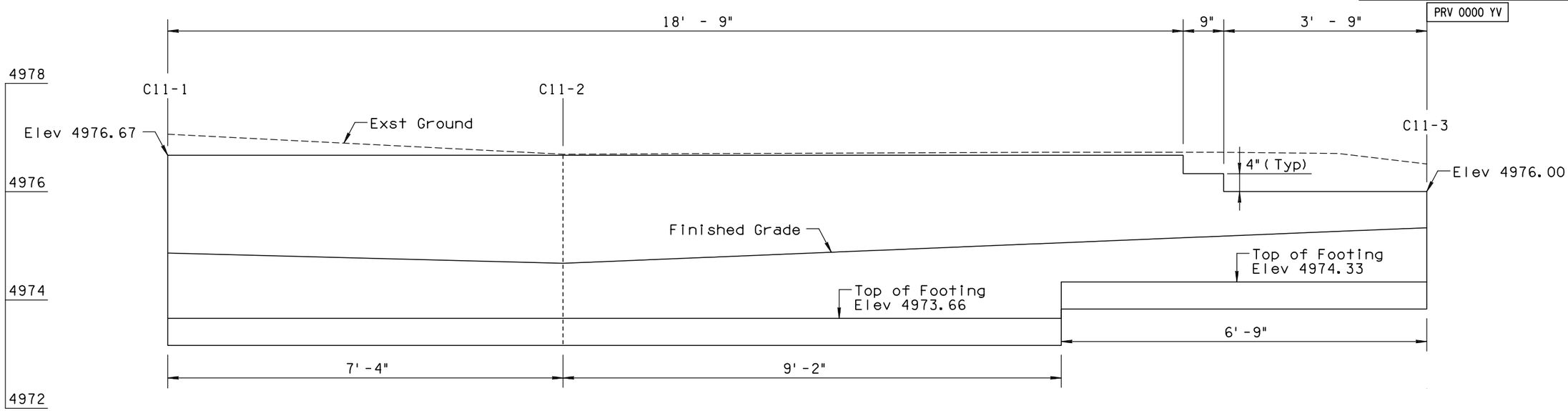

WALL C11

Scale: 1" = 1'
Length: 23' -3"
Area: 62.69 sq ft

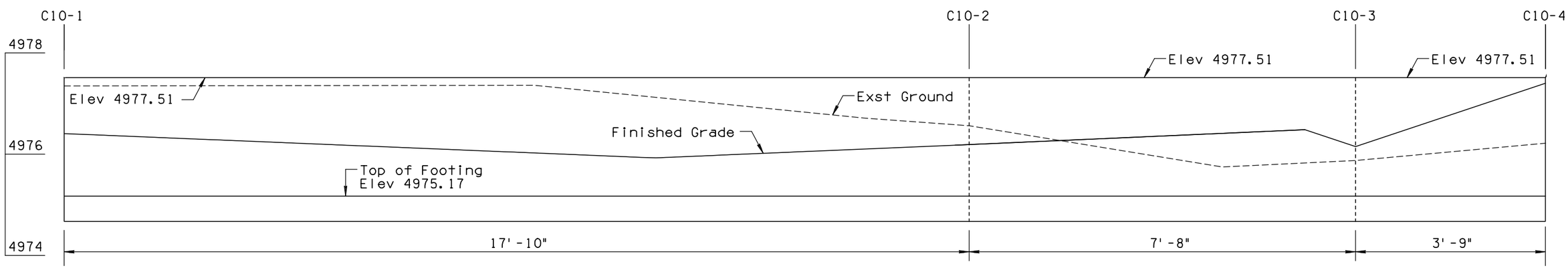

NOTES:

1. See Detail C for Horizontal Control.
2. See Detail Q for Additional Wall Information.
3. Minimum 1 foot of cover over the Wall Footing.

WALL C10

Scale: 1" = 1'
Length: 29' -3"
Area: 68.45 sq ft

	NAME	DATE
DESIGN	SMG	06/14
DRAWN	CPG	06/14
CHECKED	GPF	06/14

PARSONS BRINCKERHOFF

ARIZONA DEPARTMENT OF TRANSPORTATION
INTERMODAL TRANSPORTATION DIVISION
ROADWAY DESIGN SECTION

RETAINING WALLS

ROUTE | LOCATION PRESCOTT VALLEY PIPELINE & CENTRAL CORE MULTI-USE PATHS (PIPELINE PHASE 1)

Registered Professional Engineer (Civil) CERTIFICATE NO. 49430 GREGORY PATRICK FLY ARIZONA U.S.A. Expires 3/31/2015

DWG NO. S1-1.07

TRACS NO. SL680 01C | TEA-PRV-0(205)T | ___ OF ___

DATE- LOCATION- REVISIONS- FINISHED PLANS- SURVEY NO.

F.H.W.A. REGION	STATE	PROJECT NO.	SHEET NO.	TOTAL SHEETS	AS BUILT
9	ARIZ.	TEA-PRV-0(205)T			
		PRV 0000 YV			

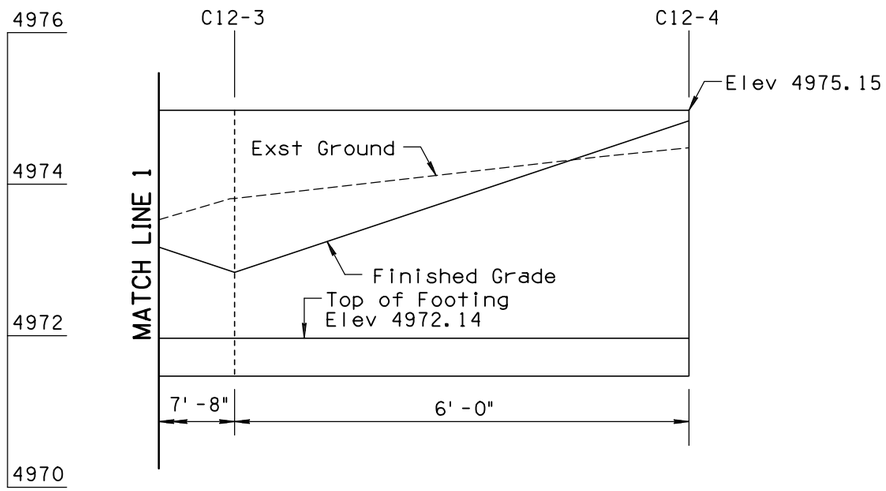

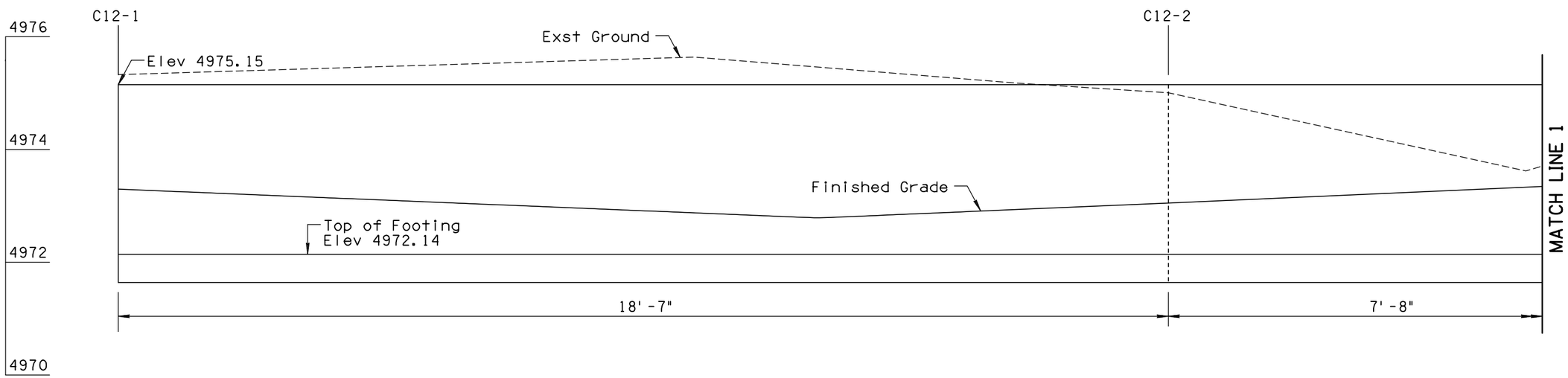

NOTES:

1. See Detail C for Horizontal Control.
2. See Detail Q for Additional Wall Information.
3. Minimum 1 foot of cover over the Wall Footing.

WALL C12

Scale: 1"=1'
Length: 32'-3"
Area: 97.08 sq ft

	NAME	DATE
DESIGN	SMG	06/14
DRAWN	CPG	06/14
CHECKED	GPF	06/14

PARSONS BRINCKERHOFF

ARIZONA DEPARTMENT OF TRANSPORTATION
INTERMODAL TRANSPORTATION DIVISION
ROADWAY DESIGN SECTION

RETAINING WALLS

ROUTE | LOCATION PRESCOTT VALLEY PIPELINE & CENTRAL CORE MULTI-USE PATHS (PIPELINE PHASE 1)

Registered Professional Engineer (Civil) CERTIFICATE NO. 49430 GREGORY PATRICK FLY ARIZONA U.S.A.
Expires 3/31/2015

DWG NO. S1-1.08

TRACS NO. SL680 01C | TEA-PRV-0(205)T | ____ OF ____

9/12/2014 T:\Prescott_MUP\SL622_ph1\Structures\SL622_wpln13.dgn

DATE- LOCATION- REVISIONS- FINISHED PLANS- SURVEY NO.

F.H.W.A. REGION	STATE	PROJECT NO.	SHEET NO.	TOTAL SHEETS	AS BUILT
9	ARIZ.	TEA-PRV-0(205)T			
		PRV 0000 YV			

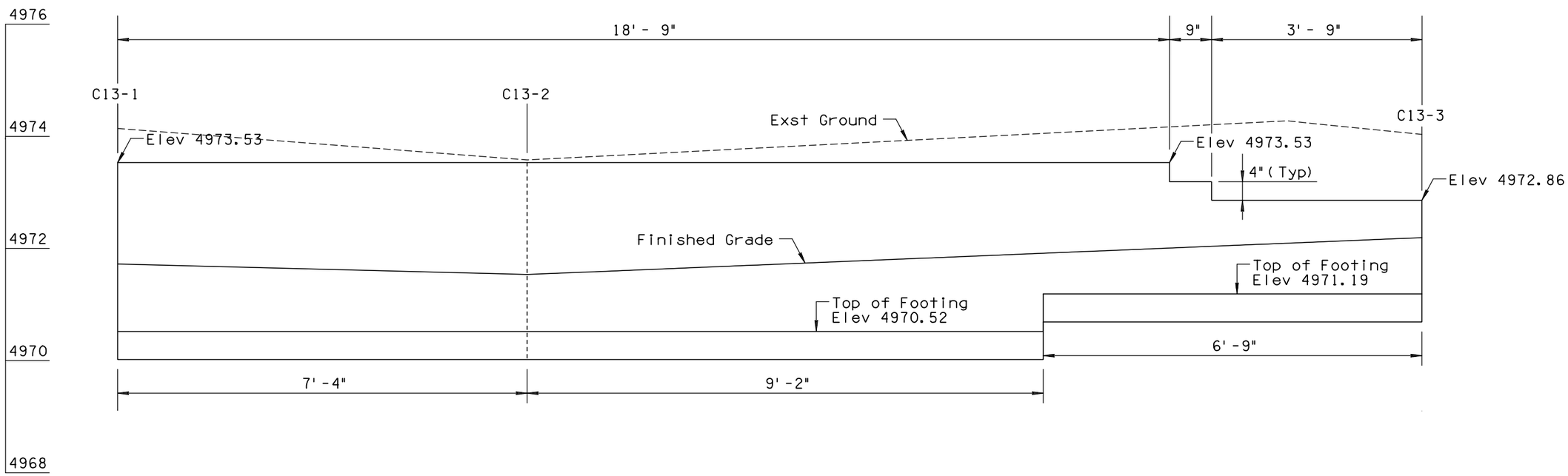

WALL C13

Scale: 1"=1'
Length: 23' -3"
Area: 62.69 sq ft

NOTES:

1. See Detail C for Horizontal Control.
2. See Detail Q for Additional Wall Information.
3. Minimum 1 foot of cover over the Wall Footing.

	NAME	DATE
DESIGN	SMG	06/14
DRAWN	CPG	06/14
CHECKED	GPF	06/14

PARSONS BRINCKERHOFF

ARIZONA DEPARTMENT OF TRANSPORTATION
INTERMODAL TRANSPORTATION DIVISION
ROADWAY DESIGN SECTION

RETAINING WALLS

ROUTE | LOCATION PRESCOTT VALLEY PIPELINE & CENTRAL CORE MULTI-USE PATHS (PIPELINE PHASE 1)

Registered Professional Engineer (Civil) CERTIFICATE NO. 49430 GREGORY PATRICK FLY ARIZONA U.S.A.
Expires 3/31/2015

DWG NO. S1-1.09

TRACS NO. SL680 01C | TEA-PRV-0(205)T | ___ OF ___

DATE- LOCATION- REVISIONS- FINISHED PLANS- SURVEY NO.

F.H.W.A. REGION	STATE	PROJECT NO.	SHEET NO.	TOTAL SHEETS	AS BUILT
9	ARIZ.	TEA-PRV-0(205)T			
		PRV 0000 YV			

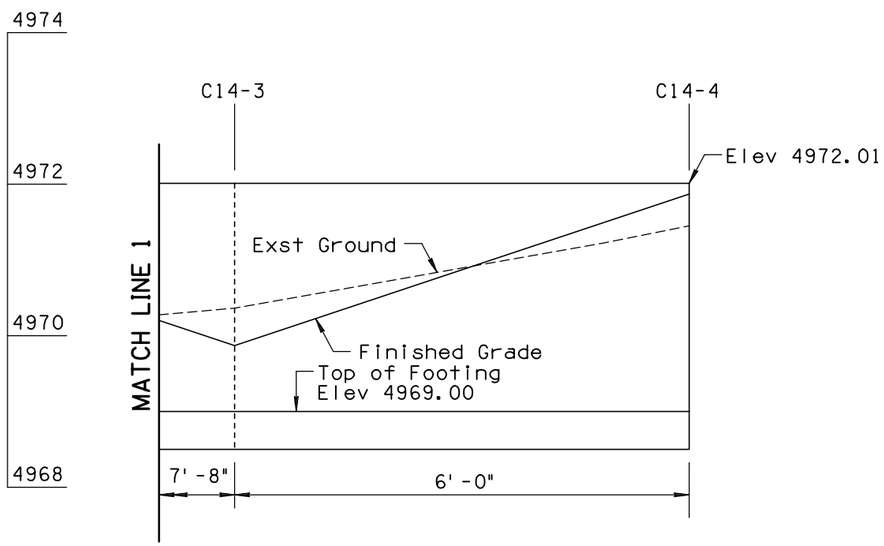

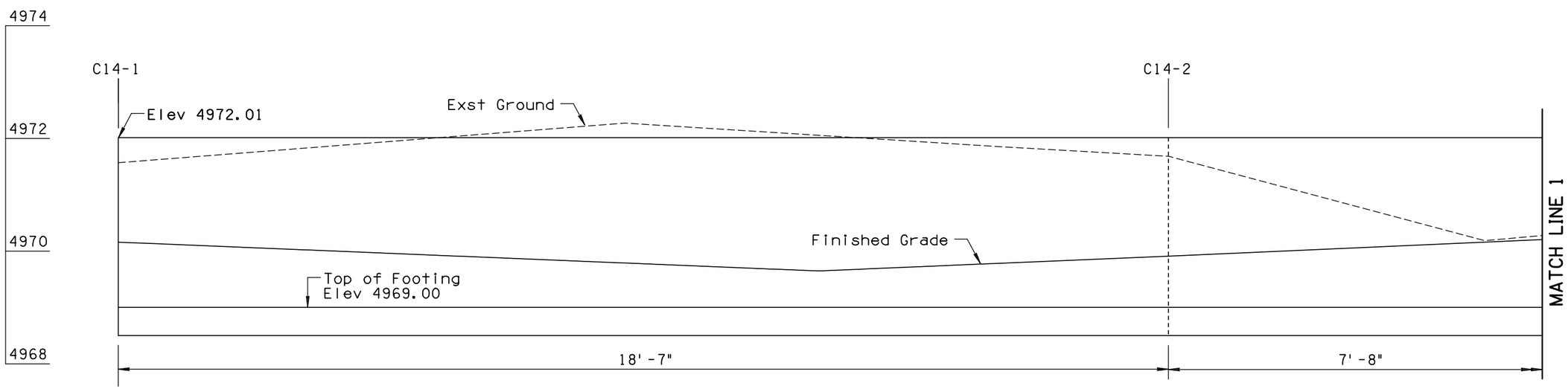

NOTES:

1. See Detail C for Horizontal Control.
2. See Detail Q for Additional Wall Information.
3. Minimum 1 foot of cover over the Wall Footing.

WALL C14

Scale: 1" = 1'
Length: 32'-3"
Area: 97.08 sq ft

	NAME	DATE
DESIGN	SMG	06/14
DRAWN	CPG	06/14
CHECKED	GPF	06/14

PARSONS BRINCKERHOFF

ARIZONA DEPARTMENT OF TRANSPORTATION
INTERMODAL TRANSPORTATION DIVISION
ROADWAY DESIGN SECTION

RETAINING WALLS

ROUTE | LOCATION PRESCOTT VALLEY PIPELINE & CENTRAL CORE MULTI-USE PATHS (PIPELINE PHASE 1)

Registered Professional Engineer (Civil) CERTIFICATE 49430 GREGORY PATRICK FLY ARIZONA U.S.A.
Expires 3/31/2015

DWG NO. S1-1.10

TRACS NO. SL680 01C | TEA-PRV-0(205)T | ___ OF ___

DATE- LOCATION- REVISIONS- FINISHED PLANS- SURVEY NO.

F.H.W.A. REGION	STATE	PROJECT NO.	SHEET NO.	TOTAL SHEETS	AS BUILT
9	ARIZ.	TEA-PRV-0(205)T			
		PRV 0000 YV			

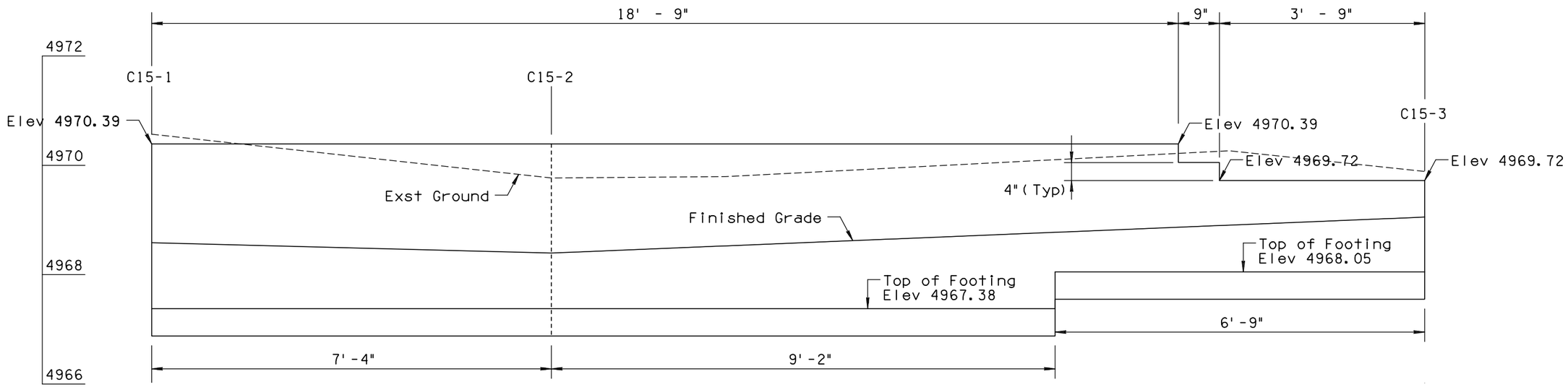

WALL C15

Scale: 1" = 1'
Length: 23' -3"
Area: 62.69 sq ft

NOTES:

1. See Detail C for Horizontal Control.
2. See Detail Q for Additional Wall Information.
3. Minimum 1 foot of cover over the Wall Footing.

	NAME	DATE
DESIGN	SMG	06/14
DRAWN	CPG	06/14
CHECKED	GPF	06/14

PARSONS BRINCKERHOFF

ARIZONA DEPARTMENT OF TRANSPORTATION
INTERMODAL TRANSPORTATION DIVISION
ROADWAY DESIGN SECTION

RETAINING WALLS

Registered Professional Engineer (Civil) CERTIFICATE NO. 49430 GREGORY PATRICK FLY ARIZONA U.S.A.
Expires 3/31/2015

ROUTE | LOCATION PRESCOTT VALLEY PIPELINE & CENTRAL CORE MULTI-USE PATHS (PIPELINE PHASE 1)

DWG NO. S1-1.11

TRACS NO. SL680 01C | TEA-PRV-0(205)T | ____ OF ____

F.H.W.A. REGION	STATE	PROJECT NO.	SHEET NO.	TOTAL SHEETS	AS BUILT
9	ARIZ.	TEA-PRV-0(205)T			
		PRV 0000 YV			

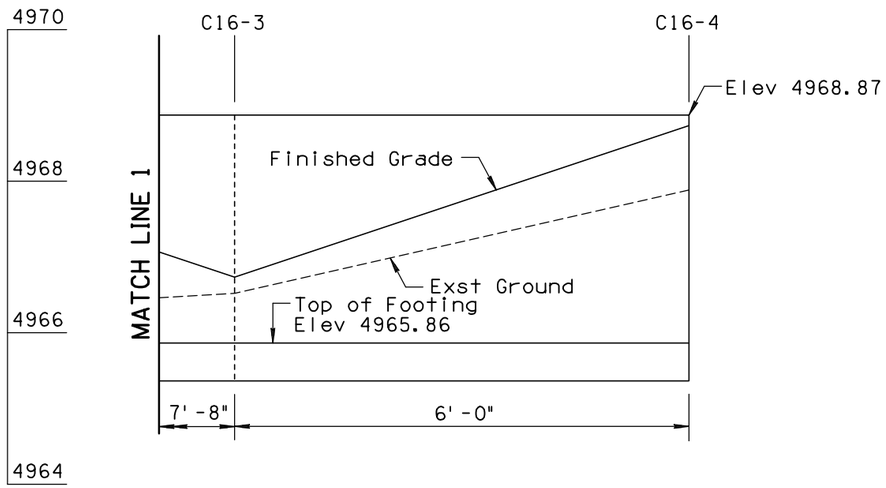

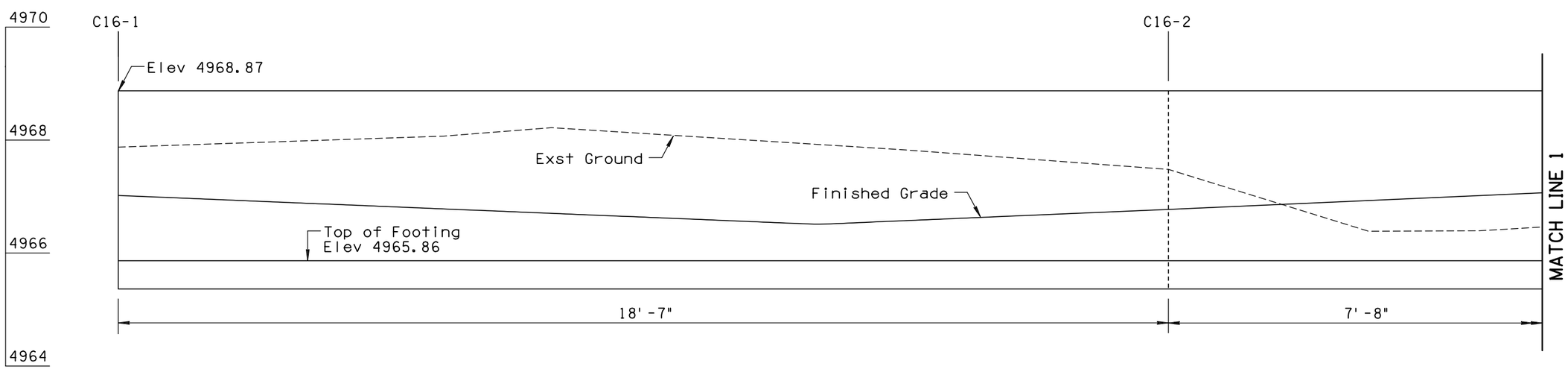

NOTES:

1. See Detail C for Horizontal Control.
2. See Detail Q for Additional Wall Information.
3. Minimum 1 foot of cover over the Wall Footing.

WALL C16

Scale: 1"=1'
Length: 32'-3"
Area: 97.08 sq ft

	NAME	DATE
DESIGN	SMG	06/14
DRAWN	CPG	06/14
CHECKED	GPF	06/14

PARSONS BRINCKERHOFF

ARIZONA DEPARTMENT OF TRANSPORTATION
INTERMODAL TRANSPORTATION DIVISION
ROADWAY DESIGN SECTION

RETAINING WALLS

ROUTE | LOCATION PRESCOTT VALLEY PIPELINE & CENTRAL CORE MULTI-USE PATHS (PIPELINE PHASE 1)

Registered Professional Engineer (Civil) CERTIFICATE NO. 49430 GREGORY PATRICK FLY ARIZONA U.S.A.
Expires 3/31/2015

DWG NO. S1-1.12

TRACS NO. SL680 01C | TEA-PRV-0(205)T | ___ OF ___

DATE- LOCATION- REVISIONS- FINISHED PLANS- SURVEY NO.

F.H.W.A. REGION	STATE	PROJECT NO.	SHEET NO.	TOTAL SHEETS	AS BUILT
9	ARIZ.	TEA-PRV-0(205)T			
		PRV 0000 YV			

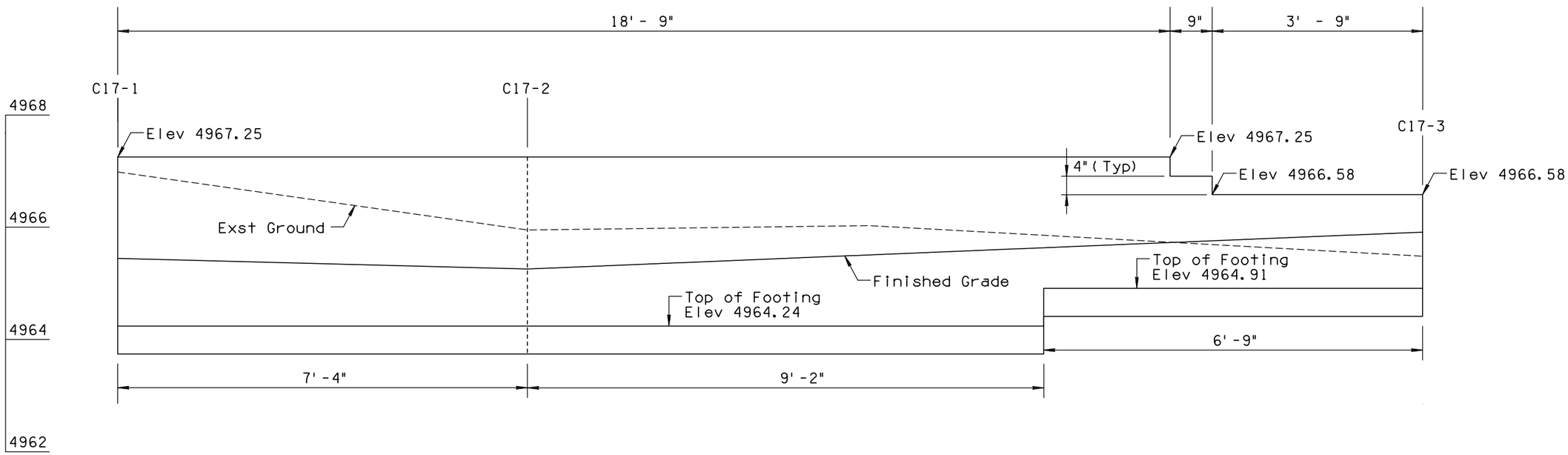

WALL C17

Scale: 1"=1'
Length: 23' -3"
Area: 62.69 sq ft

NOTES:

1. See Detail C for Horizontal Control.
2. See Detail Q for Additional Wall Information.
3. Minimum 1 foot of cover over the Wall Footing.

	NAME	DATE
DESIGN	SMG	06/14
DRAWN	CPG	06/14
CHECKED	GPF	06/14

PARSONS BRINCKERHOFF

ARIZONA DEPARTMENT OF TRANSPORTATION
INTERMODAL TRANSPORTATION DIVISION
ROADWAY DESIGN SECTION

RETAINING WALLS

ROUTE | LOCATION PRESCOTT VALLEY PIPELINE & CENTRAL CORE MULTI-USE PATHS (PIPELINE PHASE 1)

Registered Professional Engineer (Civil) CERTIFICATE NO. 49430 GREGORY PATRICK FLY ARIZONA U.S.A.
Expires 3/31/2015

DWG NO. S1-1.13

TRACS NO. SL680 01C | TEA-PRV-0(205)T | ___ OF ___

DATE- LOCATION- REVISIONS- FINISHED PLANS- SURVEY NO.

F.H.W.A. REGION	STATE	PROJECT NO.	SHEET NO.	TOTAL SHEETS	AS BUILT
9	ARIZ.	TEA-PRV-0(205)T			
		PRV 0000 YV			

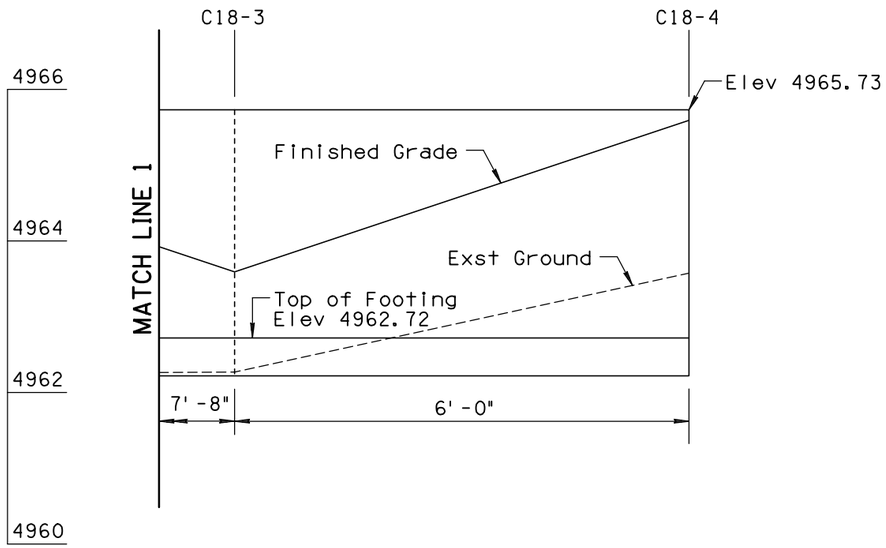

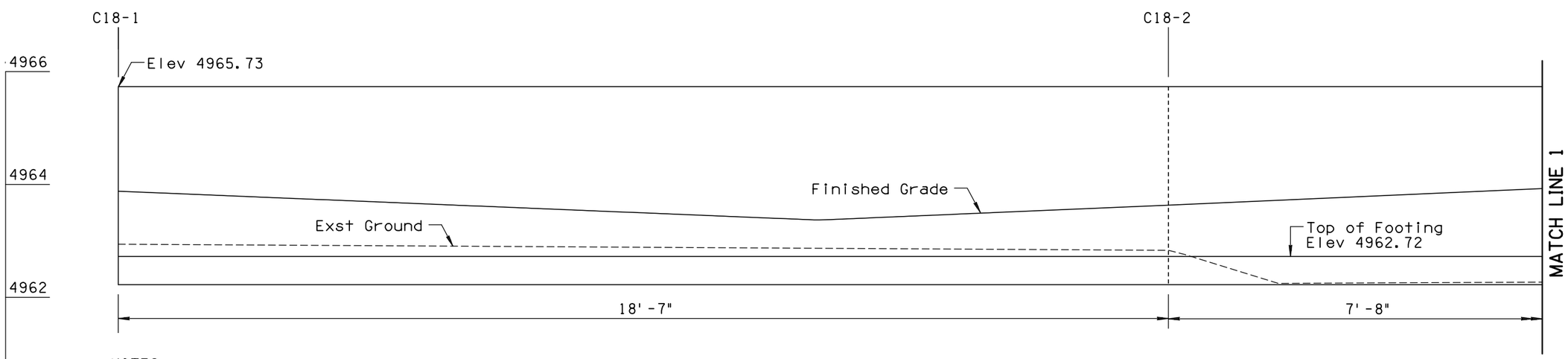

NOTES:

1. See Detail C for Horizontal Control.
2. See Detail Q for Additional Wall Information.
3. Minimum 1 foot of cover over the Wall Footing.

WALL C18

Scale: 1"=1'
Length: 32'-3"
Area: 97.08 sq ft

	NAME	DATE
DESIGN	SMG	06/14
DRAWN	CPG	06/14
CHECKED	GPF	06/14

PARSONS BRINCKERHOFF

ARIZONA DEPARTMENT OF TRANSPORTATION
INTERMODAL TRANSPORTATION DIVISION
ROADWAY DESIGN SECTION

RETAINING WALLS

ROUTE | LOCATION PRESCOTT VALLEY PIPELINE & CENTRAL CORE MULTI-USE PATHS (PIPELINE PHASE 1)

Registered Professional Engineer (Civil) CERTIFICATE NO. 49430 GREGORY PATRICK FLY ARIZONA U.S.A.
Expires 3/31/2015

DWG NO. S1-1.14

TRACS NO. SL680 01C | TEA-PRV-0(205)T | ____ OF ____

DATE- LOCATION- REVISIONS- FINISHED PLANS- SURVEY NO.

F.H.W.A. REGION	STATE	PROJECT NO.	SHEET NO.	TOTAL SHEETS	AS BUILT
9	ARIZ.	TEA-PRV-0(205)T			
		PRV 0000 YV			

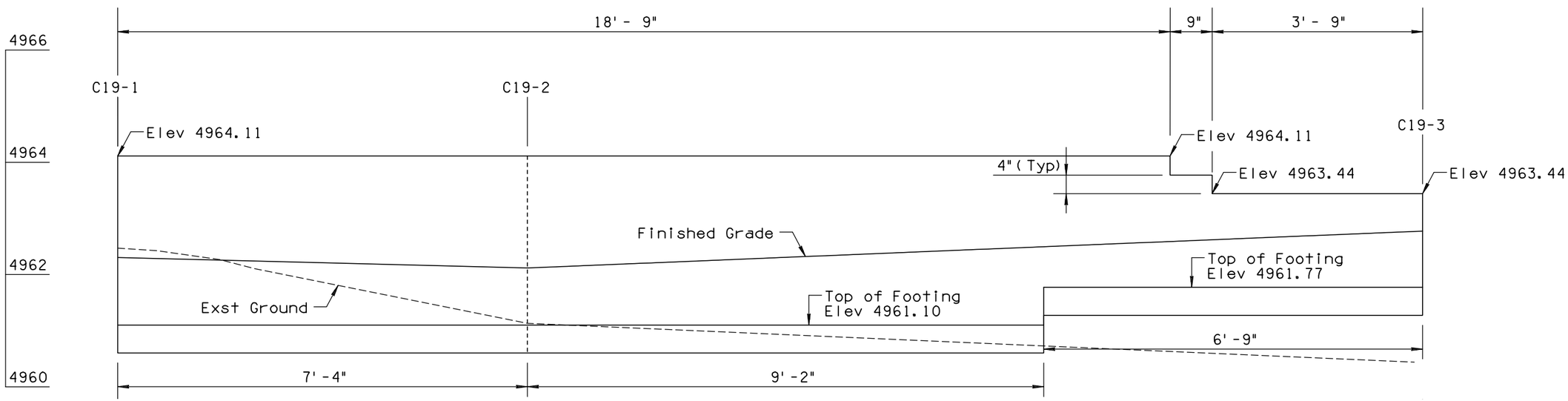

WALL C19

Scale: 1" = 1'
Length: 23' -3"
Area: 62.69 sq ft

NOTES:

1. See Detail C for Horizontal Control.
2. See Detail Q for Additional Wall Information.
3. Minimum 1 foot of cover over the Wall Footing.

	NAME	DATE
DESIGN	SMG	06/14
DRAWN	CPG	06/14
CHECKED	GPF	06/14

PARSONS BRINCKERHOFF

ARIZONA DEPARTMENT OF TRANSPORTATION
INTERMODAL TRANSPORTATION DIVISION
ROADWAY DESIGN SECTION

RETAINING WALLS

ROUTE | LOCATION PRESCOTT VALLEY PIPELINE & CENTRAL CORE MULTI-USE PATHS (PIPELINE PHASE 1)

Registered Professional Engineer (Civil) CERTIFICATE NO. 49430 GREGORY PATRICK FLY ARIZONA U.S.A.
Expires 3/31/2015

DWG NO. S1-1.15

TRACS NO. SL680 01C | TEA-PRV-0(205)T | ___ OF ___

9/12/2014 T:\Prescott_MUP\SL622_ph1\Structures\SL622_wpln16A.dgn

DATE- LOCATION- REVISIONS- FINISHED PLANS- SURVEY NO.

F.H.W.A. REGION	STATE	PROJECT NO.	SHEET NO.	TOTAL SHEETS	AS BUILT
9	ARIZ.	TEA-PRV-0(205)T			
		PRV 0000 YV			

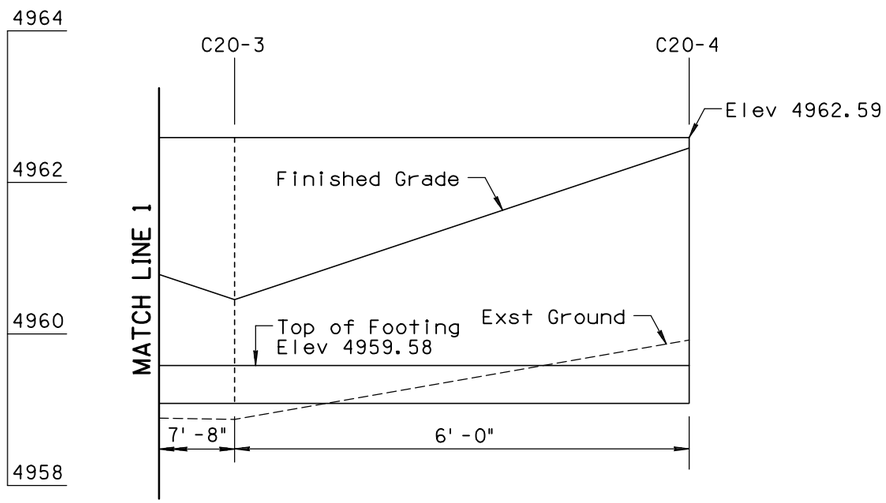

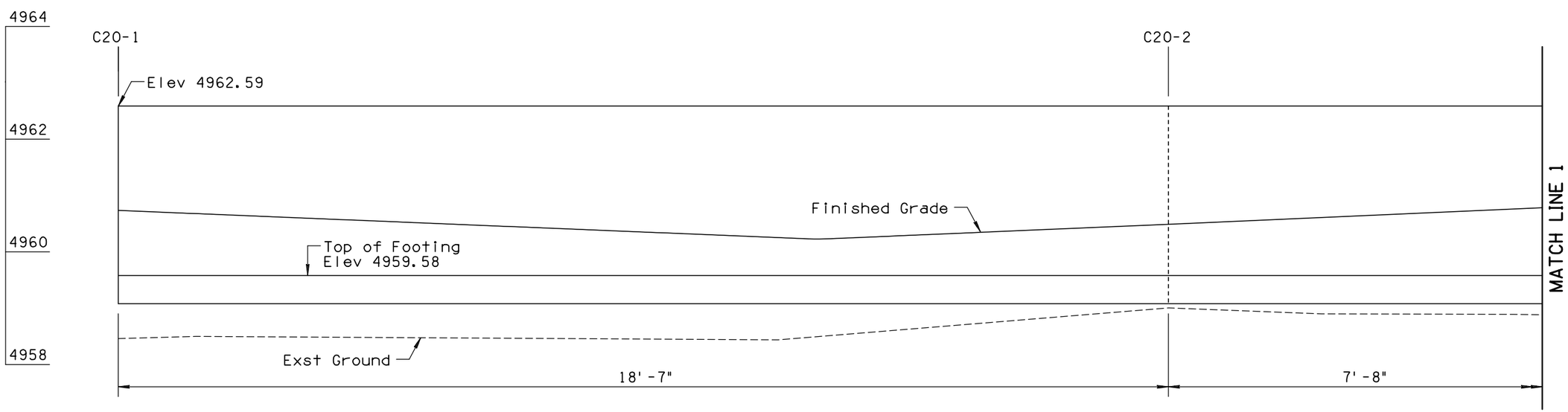

NOTES:

1. See Detail C Sheets for Horizontal Control.
2. See Detail Q for Additional Wall Information.
3. Minimum 1 foot of cover over the Wall Footing.

WALL C20

Scale: 1"=1'
Length: 32'-3"
Area: 97.08 sq ft

	NAME	DATE
DESIGN	SMG	06/14
DRAWN	CPG	06/14
CHECKED	GPF	06/14

PARSONS BRINCKERHOFF

ARIZONA DEPARTMENT OF TRANSPORTATION
INTERMODAL TRANSPORTATION DIVISION
ROADWAY DESIGN SECTION

RETAINING WALLS

ROUTE | LOCATION: PRESCOTT VALLEY PIPELINE & CENTRAL CORE MULTI-USE PATHS (PIPELINE PHASE 1)

Registered Professional Engineer (Civil) CERTIFICATE NO. 49430 GREGORY PATRICK FLY ARIZONA U.S.A. Expires 3/31/2015

DWG NO. SI-1.16

TRACS NO. SL680 01C | TEA-PRV-0(205)T | ___ OF ___

9/12/2014 I:\Prescott_MUP\SL622_ph1\Structures\SL622_wpln17.dgn

DATE- LOCATION- REVISIONS- FINISHED PLANS- SURVEY NO.

F.H.W.A. REGION	STATE	PROJECT NO.	SHEET NO.	TOTAL SHEETS	AS BUILT
9	ARIZ.	TEA-PRV-0(205)T			
		PRV 0000 YV			

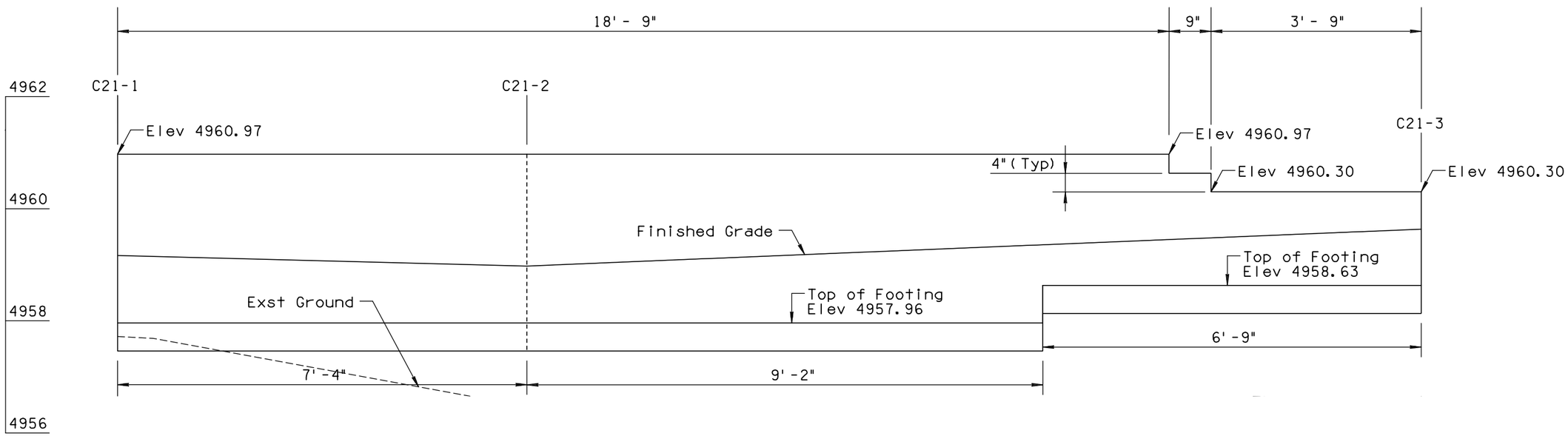

WALL C21

Scale: 1" = 1'
Length: 23' -3"
Area: 62.69 sq ft

NOTES:

1. See Detail C for Horizontal Control.
2. See Detail Q for Additional Wall Information.
3. Minimum 1 foot of cover over the Wall Footing.

	NAME	DATE
DESIGN	SMG	06/14
DRAWN	CPG	06/14
CHECKED	GPF	06/14

PARSONS BRINCKERHOFF

ARIZONA DEPARTMENT OF TRANSPORTATION
INTERMODAL TRANSPORTATION DIVISION
ROADWAY DESIGN SECTION

RETAINING WALLS

ROUTE | LOCATION PRESCOTT VALLEY PIPELINE & CENTRAL CORE MULTI-USE PATHS (PIPELINE PHASE 1)

Registered Professional Engineer (Civil) CERTIFICATE NO. 49430 GREGORY PATRICK FLY ARIZONA U.S.A.
Expires 3/31/2015

DWG NO. S1-1.17

TRACS NO. SL680 01C | TEA-PRV-0(205)T | ___ OF ___

DATE- LOCATION- REVISIONS- FINISHED PLANS- SURVEY NO.

F.H.W.A. REGION	STATE	PROJECT NO.	SHEET NO.	TOTAL SHEETS	AS BUILT
9	ARIZ.	TEA-PRV-0(205)T			
		PRV 0000 YV			

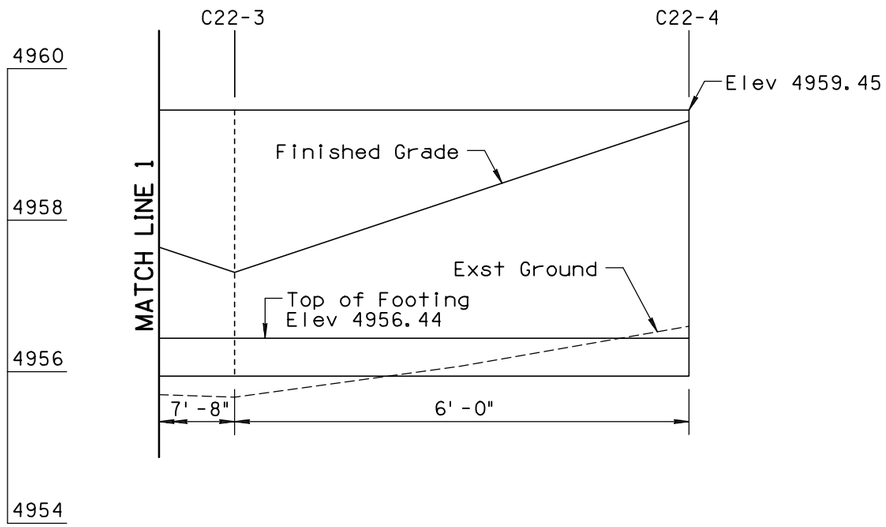

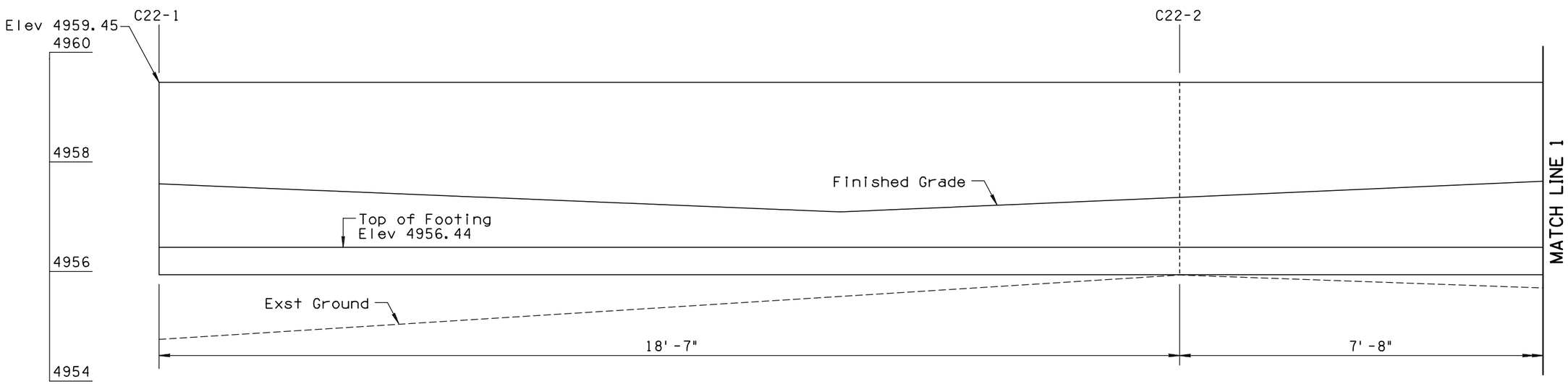

NOTES:

1. See Detail C for Horizontal Control.
2. See Detail Q for Additional Wall Information.
3. Minimum 1 foot of cover over the Wall Footing.

WALL C22

Scale: 1" = 1'
Length: 32'-3"
Area: 97.08 sq ft

	NAME	DATE
DESIGN	SMG	06/14
DRAWN	CPG	06/14
CHECKED	GPF	06/14

PARSONS BRINCKERHOFF

ARIZONA DEPARTMENT OF TRANSPORTATION
INTERMODAL TRANSPORTATION DIVISION
ROADWAY DESIGN SECTION

RETAINING WALLS

ROUTE | LOCATION PRESCOTT VALLEY PIPELINE & CENTRAL CORE MULTI-USE PATHS (PIPELINE PHASE 1)

Registered Professional Engineer (Civil) CERTIFICATE NO. 49430 GREGORY PATRICK FLY ARIZONA U.S.A.
Expires 3/31/2015

DWG NO. S1-1.18

TRACS NO. SL680 01C | TEA-PRV-0(205)T | ___ OF ___

DATE- | LOCATION- | REVISIONS- | FINISHED PLANS- | SURVEY NO.

F.H.W.A. REGION	STATE	PROJECT NO.	SHEET NO.	TOTAL SHEETS	AS BUILT
9	ARIZ.	TEA-PRV-0(205)T			
		PRV 0000 YV			

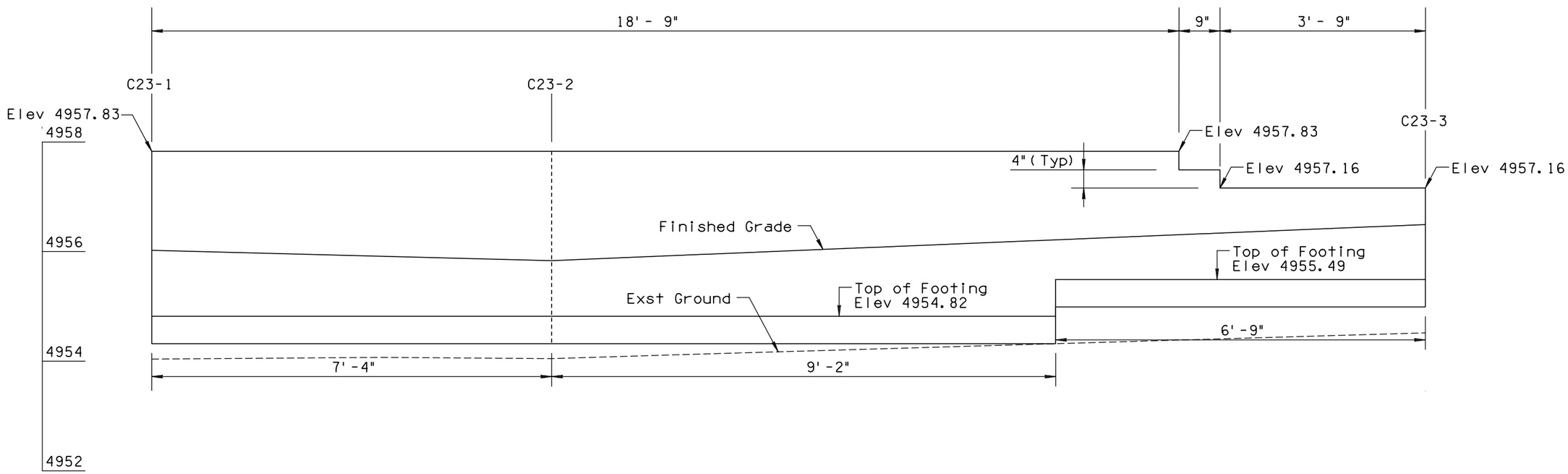

WALL C23

Scale: 1" = 1'
Length: 23' -3"
Area: 62.69 sq ft

NOTES:

1. See Detail C for Horizontal Control.
2. See Detail Q for Additional Wall Information.
3. Minimum 1 foot of cover over the Wall Footing.

	NAME	DATE
DESIGN	SMG	06/14
DRAWN	CPG	06/14
CHECKED	GPF	06/14

ARIZONA DEPARTMENT OF TRANSPORTATION
INTERMODAL TRANSPORTATION DIVISION
ROADWAY DESIGN SECTION

PARSONS BRINCKERHOFF

RETAINING WALLS

ROUTE | LOCATION PRESCOTT VALLEY PIPELINE & CENTRAL CORE MULTI-USE PATHS (PIPELINE PHASE 1)

Registered Professional Engineer (Civil) CERTIFICATE NO. 49430 GREGORY PATRICK FLY ARIZONA U.S.A.
Expires 3/31/2015

DWG NO. S1-1.19

TRACS NO. SL680 01C | TEA-PRV-0(205)T | ___ OF ___

9/12/2014 T:\Prescott_MUP\SL622_ph1\Structures\SL622_wpln18A.dgn

SURVEY NO. | FINISHED PLANS- | REVISIONS- | LOCATION- | DATE-

F.H.W.A. REGION	STATE	PROJECT NO.	SHEET NO.	TOTAL SHEETS	AS BUILT
9	ARIZ.	TEA-PRV-0(205)T			
		PRV 0000 YV			

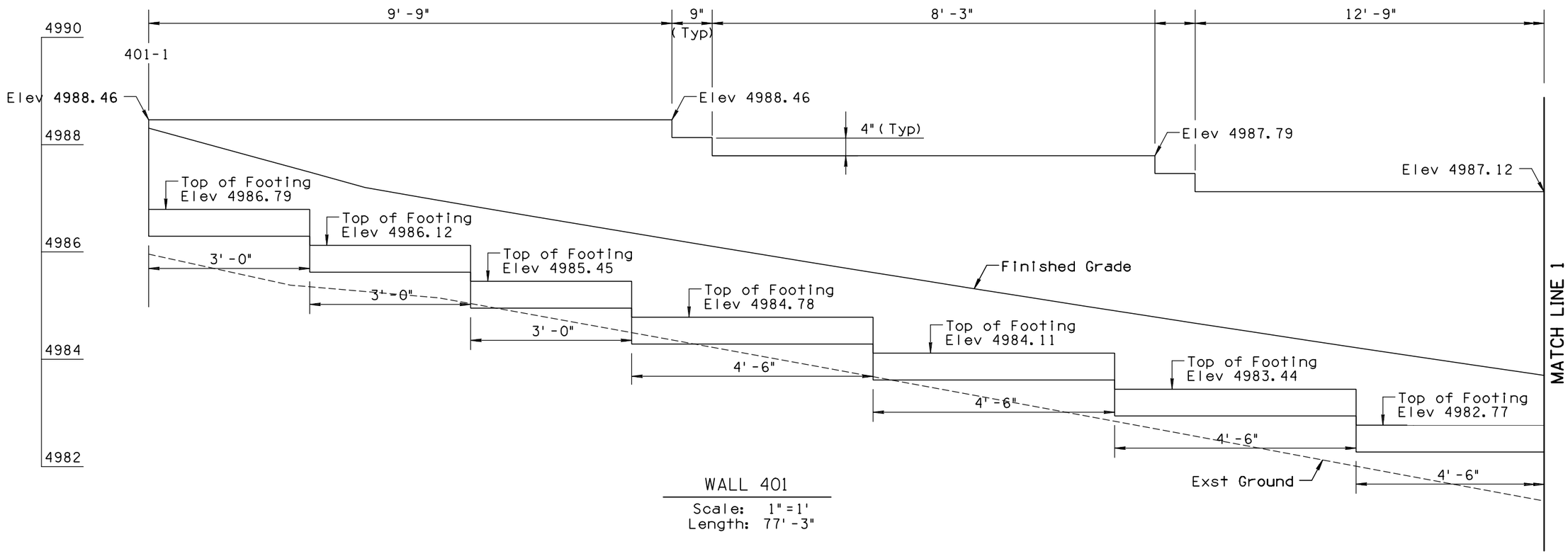

WALL 401

Scale: 1" = 1'
Length: 77'-3"

NOTE:

1. See Plans for Horizontal Control.
2. See Detail Q for Additional Wall Information.
3. Minimum 1 foot of cover over the Wall Footing.

	NAME	DATE
DESIGN	SMG	06/14
DRAWN	CPG	06/14
CHECKED	GPF	06/14

PARSONS BRINCKERHOFF

ARIZONA DEPARTMENT OF TRANSPORTATION
INTERMODAL TRANSPORTATION DIVISION
ROADWAY DESIGN SECTION

RETAINING WALLS

ROUTE | LOCATION PRESCOTT VALLEY PIPELINE & CENTRAL CORE MULTI-USE PATHS (PIPELINE PHASE 1)

Registered Professional Engineer (Civil) CERTIFICATE NO. 49430 GREGORY PATRICK FLY ARIZONA U.S.A. Expires 3/31/2015

DWG NO. S1-1.20

TRACS NO. SL680 01C | TEA-PRV-0(205)T | ___ OF ___

DATE- LOCATION- REVISIONS- FINISHED PLANS- SURVEY NO.

F.H.W.A. REGION	STATE	PROJECT NO.	SHEET NO.	TOTAL SHEETS	AS BUILT
9	ARIZ.	TEA-PRV-0(205)T			
		PRV 0000 YV			

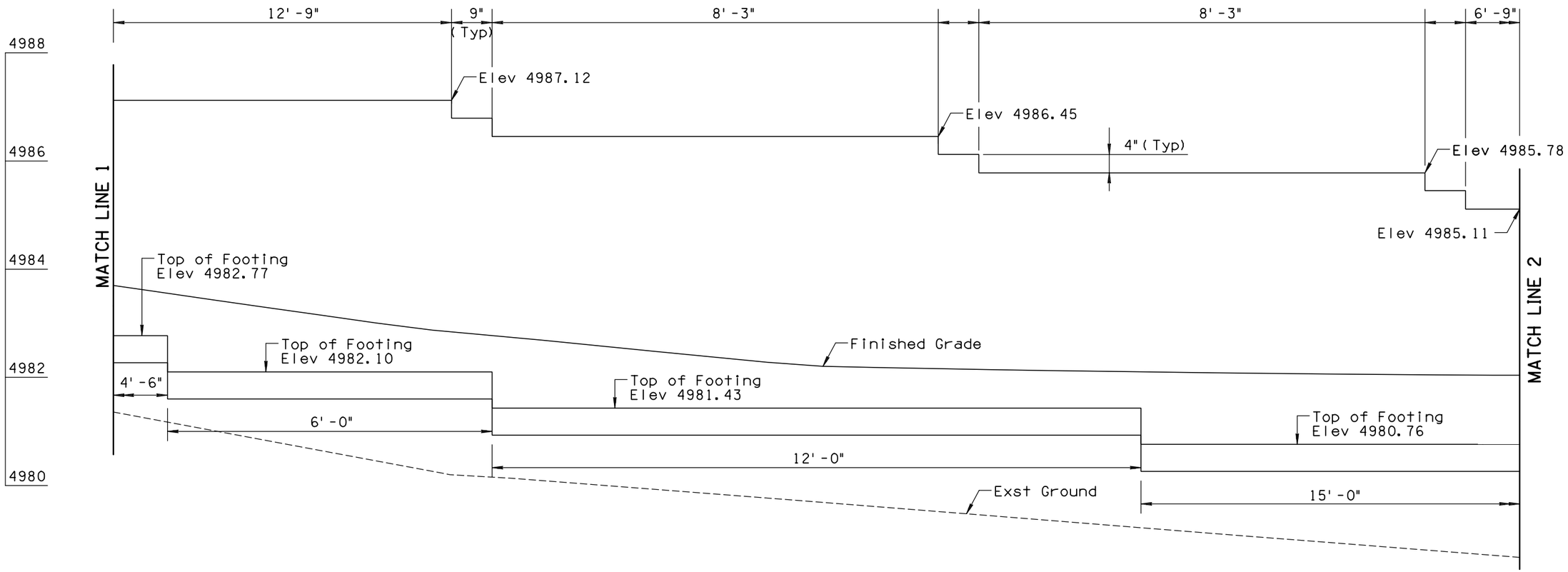

WALL 401

Scale: 1"=1'
Length: 77'-3"

NOTE:

1. See Plans for Horizontal Control.
2. See Detail Q for Additional Wall Information.
3. Minimum 1 foot of cover over the Wall Footing.

	NAME	DATE
DESIGN	SMG	06/14
DRAWN	CPG	06/14
CHECKED	GPF	06/14

PARSONS BRINCKERHOFF

ARIZONA DEPARTMENT OF TRANSPORTATION
INTERMODAL TRANSPORTATION DIVISION
ROADWAY DESIGN SECTION

RETAINING WALLS

ROUTE | LOCATION: PRESCOTT VALLEY PIPELINE & CENTRAL CORE MULTI-USE PATHS (PIPELINE PHASE 1)

Registered Professional Engineer (Civil) CERTIFICATE NO. 49430 GREGORY PATRICK FLY ARIZONA U.S.A. Expires 3/31/2015

DWG NO. S1-1.21

TRACS NO. SL680 01C | TEA-PRV-0(205)T | ___ OF ___

F.H.W.A. REGION	STATE	PROJECT NO.	SHEET NO.	TOTAL SHEETS	AS BUILT
9	ARIZ.	TEA-PRV-0(205)T			
		PRV 0000 YV			

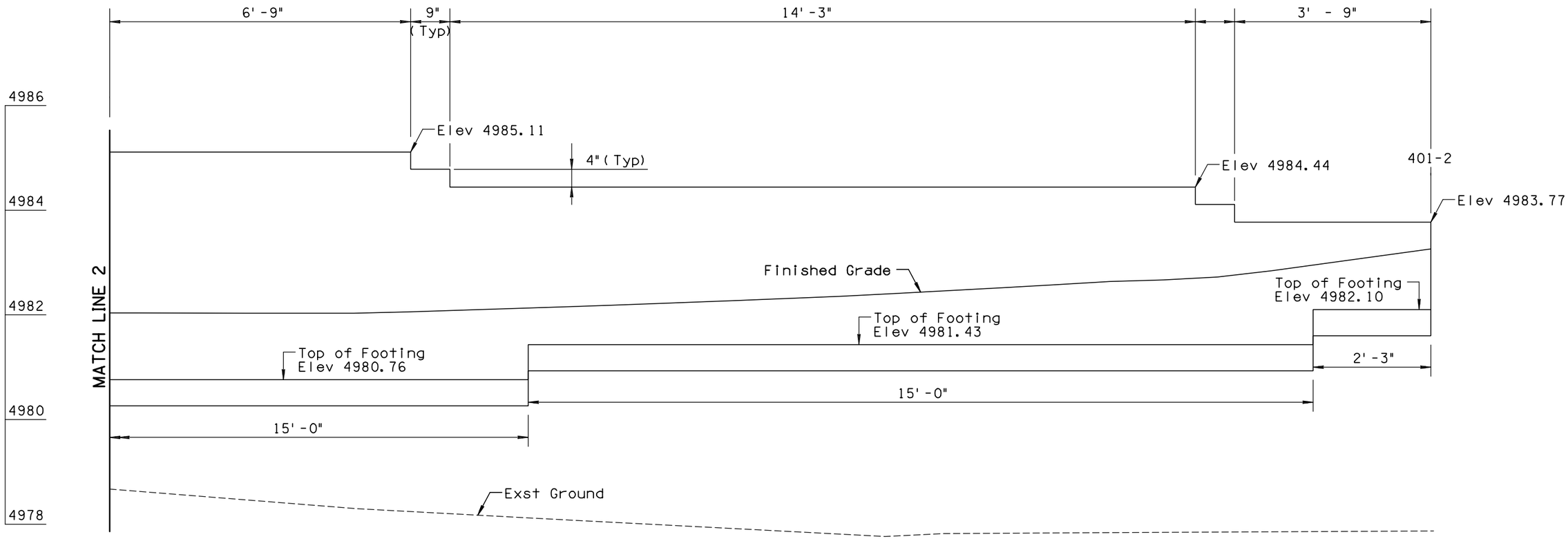

WALL 401

Scale: 1"=1'
Length: 77'-3"
Area: 292.09 sq ft

NOTE:

1. See Plans for Horizontal Control.
2. See Detail Q for Additional Wall Information.
3. Minimum 1 foot of cover over the Wall Footing.

	NAME	DATE
DESIGN	SMG	06/14
DRAWN	CPG	06/14
CHECKED	GPF	06/14

PARSONS BRINCKERHOFF

ARIZONA DEPARTMENT OF TRANSPORTATION
INTERMODAL TRANSPORTATION DIVISION
ROADWAY DESIGN SECTION

RETAINING WALLS

ROUTE | LOCATION PRESCOTT VALLEY PIPELINE & CENTRAL CORE MULTI-USE PATHS (PIPELINE PHASE 1)

Registered Professional Engineer (Civil) CERTIFICATE NO. 49430 GREGORY PATRICK FLY ARIZONA U.S.A. Expires 3/31/2015

DWG NO. S1-1.22

TRACS NO. SL680 01C | TEA-PRV-0(205)T | ___ OF ___

DATE- LOCATION- REVISIONS- FINISHED PLANS- SURVEY NO.

F.H.W.A. REGION	STATE	PROJECT NO.	SHEET NO.	TOTAL SHEETS	AS BUILT
9	ARIZ.	TEA-PRV-0(205)T			
		PRV 0000 YV			

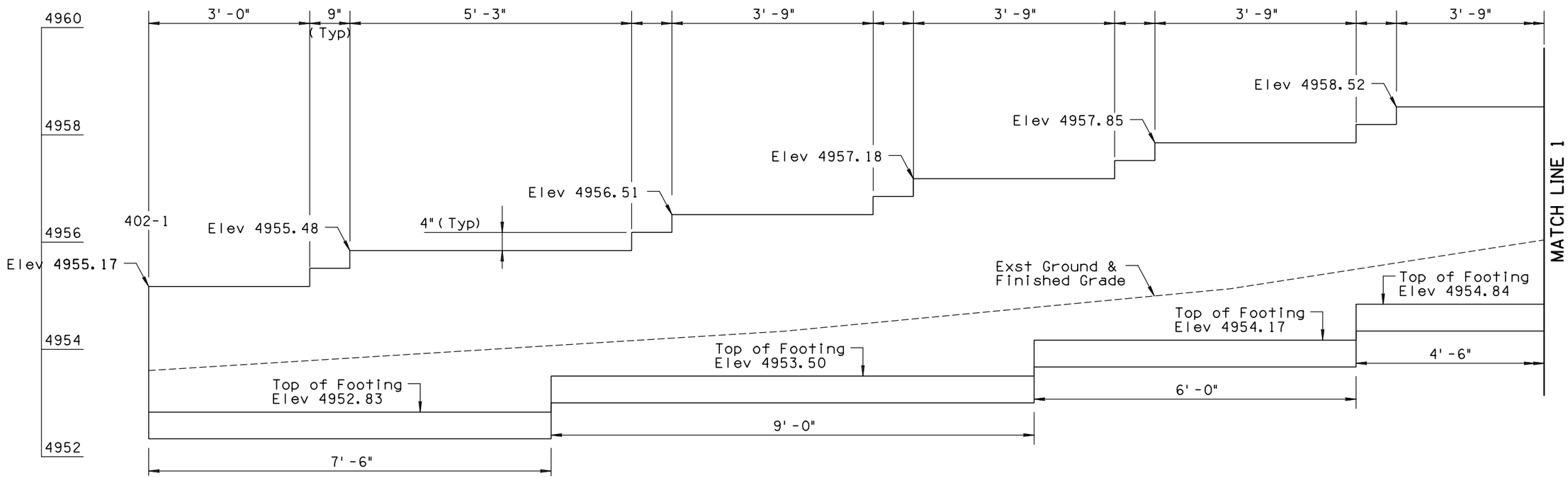

WALL 402

Scale: 1" = 1'
Length: 129'-0"

NOTE:

1. See Plans for Horizontal Control.
2. See Detail Q for Additional Wall Information.
3. Minimum 1 foot of cover over the Wall Footing.

	NAME	DATE
DESIGN	SMG	06/14
DRAWN	CPG	06/14
CHECKED	GPF	06/14

PARSONS BRINCKERHOFF

ARIZONA DEPARTMENT OF TRANSPORTATION
INTERMODAL TRANSPORTATION DIVISION
ROADWAY DESIGN SECTION

RETAINING WALLS

ROUTE | LOCATION: PRESCOTT VALLEY PIPELINE & CENTRAL CORE MULTI-USE PATHS (PIPELINE PHASE 1)

Registered Professional Engineer (Civil) CERTIFICATE NO. 49430 GREGORY PATRICK FLY ARIZONA U.S.A. Expires 3/31/2015

DWG NO. S1-1.23

TRACS NO. SL680 01C | TEA-PRV-0(205)T | ___ OF ___

DATE- LOCATION- REVISIONS- FINISHED PLANS- SURVEY NO.

F.H.W.A. REGION	STATE	PROJECT NO.	SHEET NO.	TOTAL SHEETS	AS BUILT
9	ARIZ.	TEA-PRV-0(205)T			
		PRV 0000 YV			

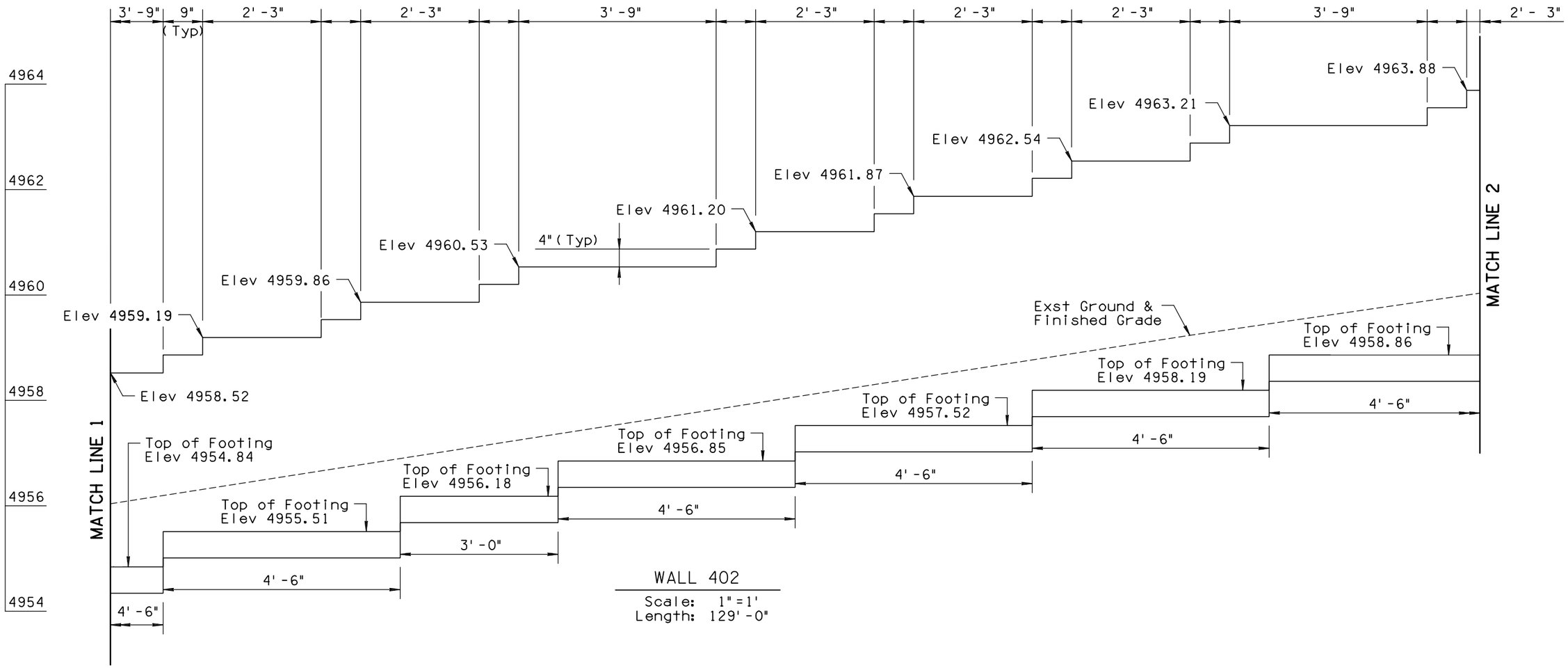

WALL 402

Scale: 1" = 1'
Length: 129'-0"

NOTE:

1. See Plans for Horizontal Control.
2. See Detail Q for Additional Wall Information.
3. Minimum 1 foot of cover over the Wall Footing.

	NAME	DATE
DESIGN	SMG	06/14
DRAWN	CPG	06/14
CHECKED	GPF	06/14

PARSONS BRINCKERHOFF

ARIZONA DEPARTMENT OF TRANSPORTATION
INTERMODAL TRANSPORTATION DIVISION
ROADWAY DESIGN SECTION

RETAINING WALLS

ROUTE | LOCATION PRESCOTT VALLEY PIPELINE & CENTRAL CORE MULTI-USE PATHS (PIPELINE PHASE 1)

Registered Professional Engineer (Civil) CERTIFICATE NO. 49450 GREGORY PATRICK FLY ARIZONA U.S.A.
Expires 3/31/2015

DWG NO. S1-1.24

TRACS NO. SL680 01C | TEA-PRV-0(205)T | ___ OF ___

9/12/2014 T:\Prescott_MUP\SL622_ph1\Structures\SL622_wpln-202.dgn

DATE- LOCATION- REVISIONS- FINISHED PLANS- SURVEY NO.

F.H.W.A. REGION	STATE	PROJECT NO.	SHEET NO.	TOTAL SHEETS	AS BUILT
9	ARIZ.	TEA-PRV-0(205)T			
		PRV 0000 YV			

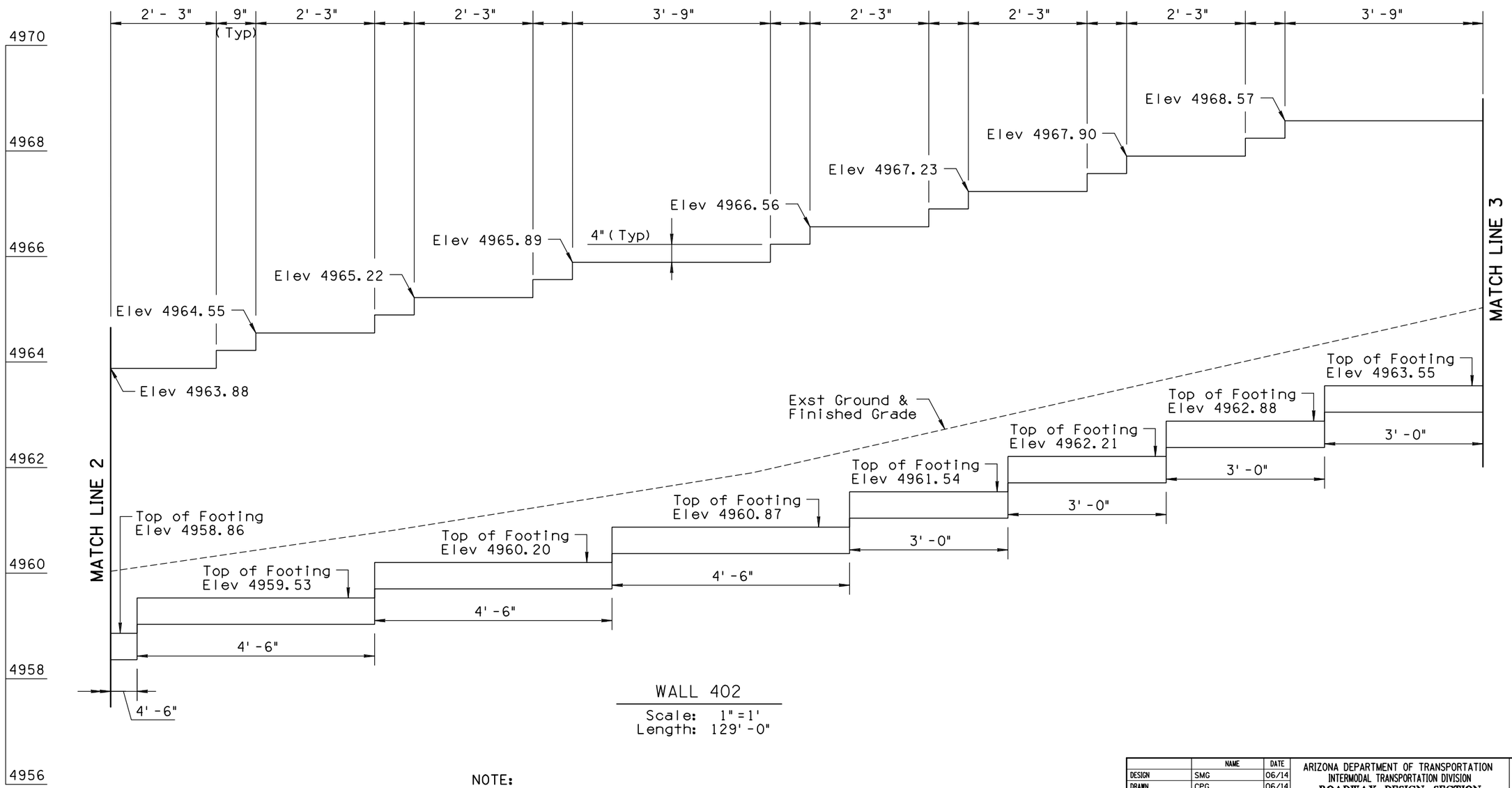

WALL 402

Scale: 1" = 1'
Length: 129' -0"

NOTE:

1. See Plans for Horizontal Control.
2. See Detail Q for Additional Wall Information.
3. Minimum 1 foot of cover over the Wall Footing.

	NAME	DATE
DESIGN	SMG	06/14
DRAWN	CPG	06/14
CHECKED	GPF	06/14

PARSONS BRINCKERHOFF

ARIZONA DEPARTMENT OF TRANSPORTATION
INTERMODAL TRANSPORTATION DIVISION
ROADWAY DESIGN SECTION

RETAINING WALLS

ROUTE | LOCATION PRESCOTT VALLEY PIPELINE & CENTRAL CORE MULTI-USE PATHS (PIPELINE PHASE 1)

Registered Professional Engineer (Civil) CERTIFICATE NO. 49450 GREGORY PATRICK FLY ARIZONA U.S.A.
Expires 3/31/2015

DWG NO. S1-1.25

TRACS NO. SL680 01C | TEA-PRV-0(205)T | ___ OF ___

DATE- LOCATION- REVISIONS- FINISHED PLANS- SURVEY NO.

9/12/2014 T:\Prescott_MUP\SL622_ph1\Structures\SL622_wpln-203.dgn

F.H.W.A. REGION	STATE	PROJECT NO.	SHEET NO.	TOTAL SHEETS	AS BUILT
9	ARIZ.	TEA-PRV-0(205)T			
		PRV 0000 YV			

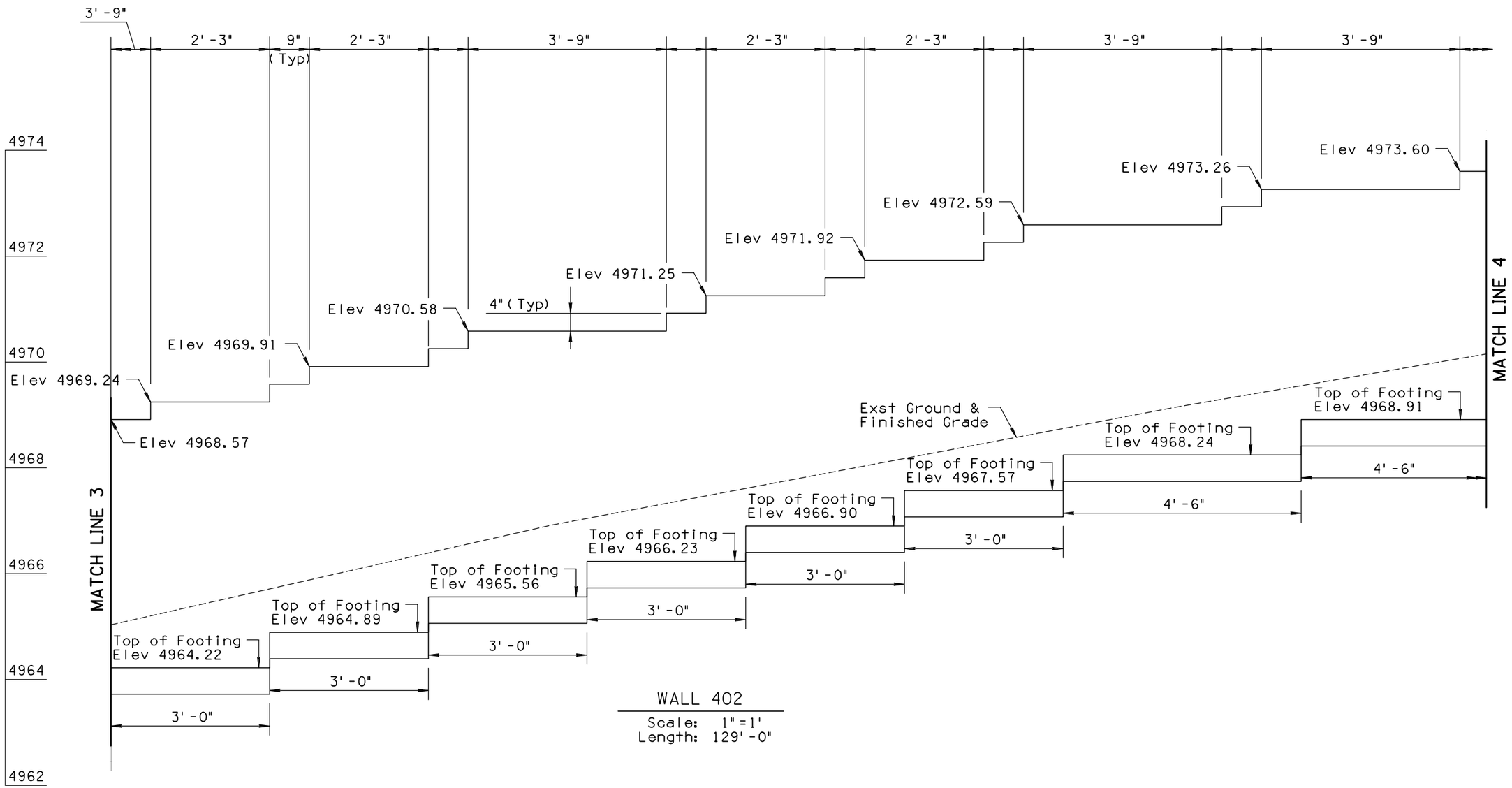

WALL 402

Scale: 1"=1'
Length: 129'-0"

NOTE:

1. See Plans for Horizontal Control.
2. See Detail Q for Additional Wall Information.
3. Minimum 1 foot of cover over the Wall Footing.

	NAME	DATE
DESIGN	SMG	06/14
DRAWN	CPG	06/14
CHECKED	GPF	06/14

PARSONS BRINCKERHOFF

ARIZONA DEPARTMENT OF TRANSPORTATION
INTERMODAL TRANSPORTATION DIVISION
ROADWAY DESIGN SECTION

RETAINING WALLS

ROUTE | LOCATION PRESCOTT VALLEY PIPELINE & CENTRAL CORE MULTI-USE PATHS (PIPELINE PHASE 1)

Registered Professional Engineer (Civil) CERTIFICATE NO. 49430 GREGORY PATRICK FLY ARIZONA U.S.A.
Expires 3/31/2015

DWG NO. S1-1.26

TRACS NO. SL680 01C | TEA-PRV-0(205)T | ___ OF ___

9/12/2014 T:\Prescott_MUP\SL622_ph1\Structures\SL622_wpln-204.dgn

DATE- LOCATION- REVISIONS- FINISHED PLANS- SURVEY NO.

F.H.W.A. REGION	STATE	PROJECT NO.	SHEET NO.	TOTAL SHEETS	AS BUILT
9	ARIZ.	TEA-PRV-0(205)T			
		PRV 0000 YV			

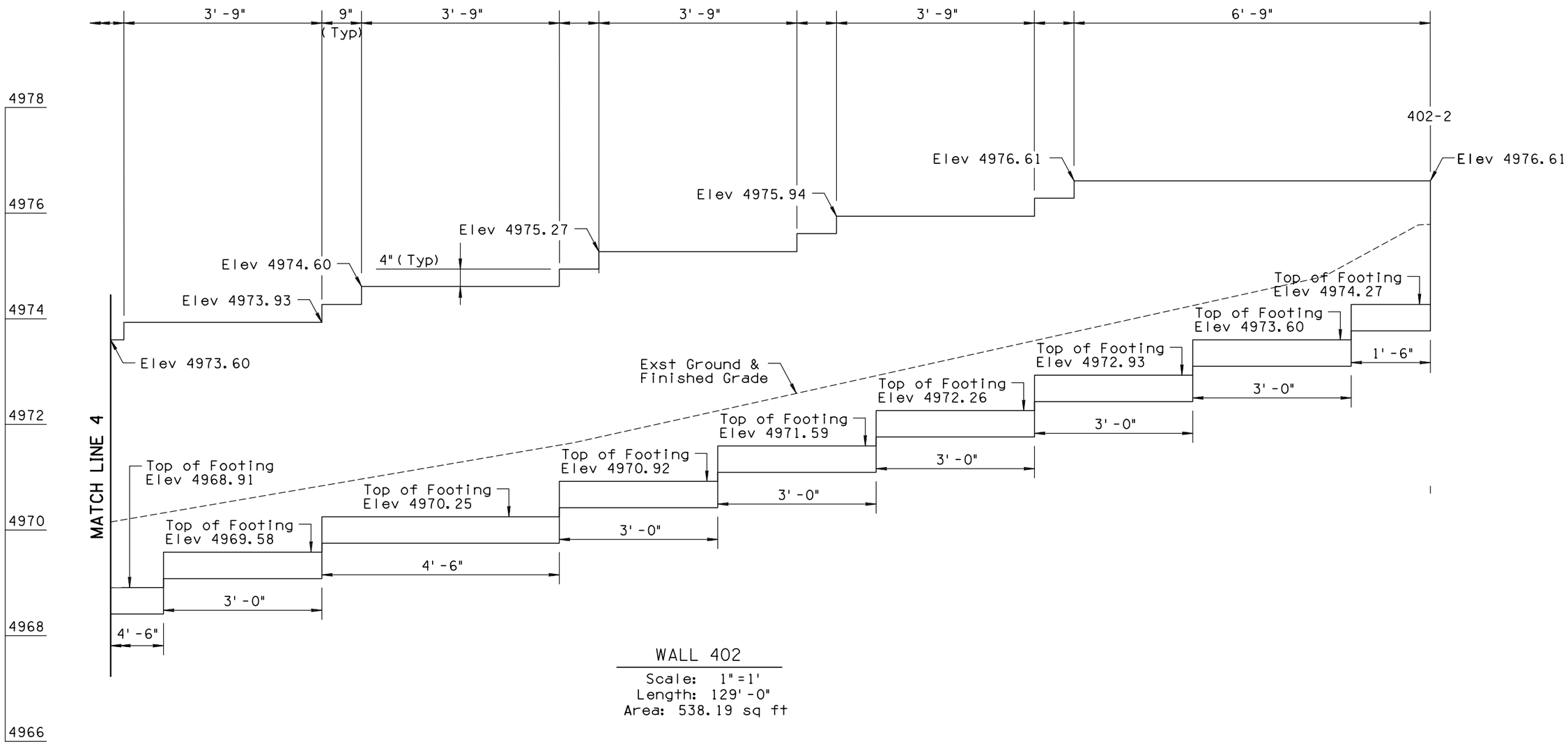

WALL 402

Scale: 1"=1'
Length: 129'-0"
Area: 538.19 sq ft

NOTE:

1. See Plans for Horizontal Control.
2. See Detail Q for Additional Wall Information.
3. Minimum 1 foot of cover over the Wall Footing.

	NAME	DATE
DESIGN	SMG	06/14
DRAWN	CPG	06/14
CHECKED	GPF	06/14

PARSONS BRINCKERHOFF

ARIZONA DEPARTMENT OF TRANSPORTATION
INTERMODAL TRANSPORTATION DIVISION
ROADWAY DESIGN SECTION

RETAINING WALLS

ROUTE | LOCATION PRESCOTT VALLEY PIPELINE & CENTRAL CORE MULTI-USE PATHS (PIPELINE PHASE 1)

Registered Professional Engineer (Civil) CERTIFICATE NO. 49430 GREGORY PATRICK FLY ARIZONA U.S.A. Expires 3/31/2015

DWG NO. S1-1.27

TRACS NO. SL680 01C | TEA-PRV-0(205)T | ____ OF ____

DATE- LOCATION- REVISIONS- FINISHED PLANS- SURVEY NO.

F.H.W.A. REGION	STATE	PROJECT NO.	SHEET NO.	TOTAL SHEETS	AS BUILT
9	ARIZ.	TEA-PRV-0(205)T			
		PRV 0000 YV			

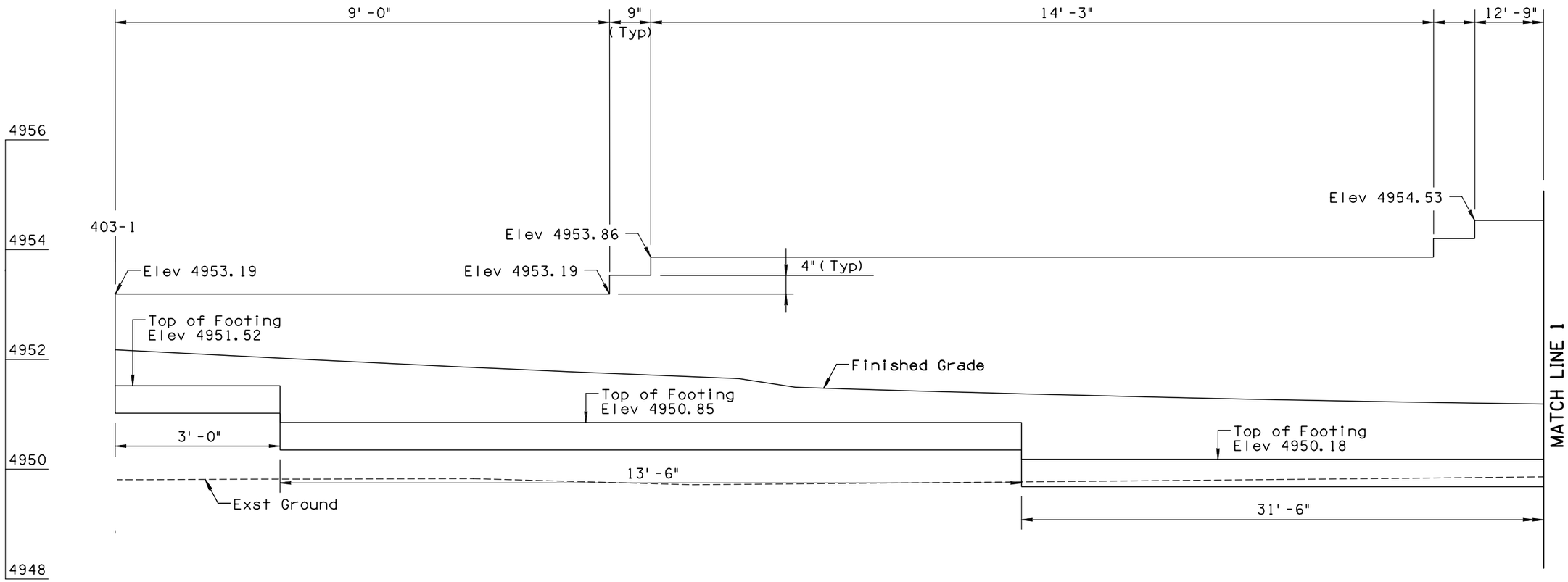

WALL 403

Scale: 1"=1'
Length: 144'-9"

NOTE:

1. See Plans for Horizontal Control.
2. See Detail Q for Additional Wall Information.
3. Minimum 1 foot of cover over the Wall Footing.

	NAME	DATE
DESIGN	SMG	06/14
DRAWN	CPG	06/14
CHECKED	GPF	06/14

PARSONS BRINCKERHOFF

ARIZONA DEPARTMENT OF TRANSPORTATION
INTERMODAL TRANSPORTATION DIVISION
ROADWAY DESIGN SECTION

RETAINING WALLS

ROUTE | LOCATION: PRESCOTT VALLEY PIPELINE & CENTRAL CORE MULTI-USE PATHS (PIPELINE PHASE 1)

Registered Professional Engineer (Civil) CERTIFICATE NO. 49430 GREGORY PATRICK FLY ARIZONA U.S.A.
Expires 3/31/2015

DWG NO. S1-1.28

TRACS NO. SL680 01C | TEA-PRV-0(205)T | ___ OF ___

DATE- LOCATION- REVISIONS- FINISHED PLANS- SURVEY NO.

F.H.W.A. REGION	STATE	PROJECT NO.	SHEET NO.	TOTAL SHEETS	AS BUILT
9	ARIZ.	TEA-PRV-0(205)T			
		PRV 0000 YV			

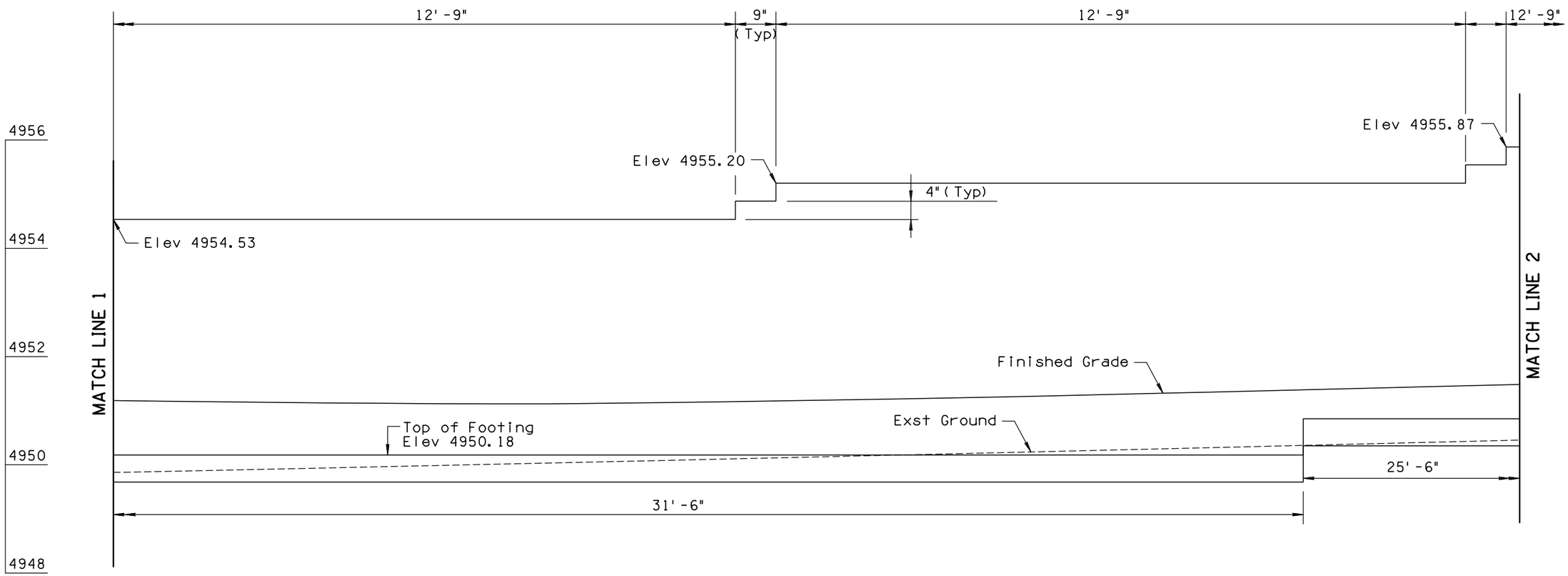

WALL 403

Scale: 1"=1'
Length: 144'-9"

NOTE:

1. See Plans for Horizontal Control.
2. See Detail Q for Additional Wall Information.
3. Minimum 1 foot of cover over the Wall Footing.

	NAME	DATE
DESIGN	SMG	06/14
DRAWN	CPG	06/14
CHECKED	GPF	06/14

PARSONS BRINCKERHOFF

ARIZONA DEPARTMENT OF TRANSPORTATION
INTERMODAL TRANSPORTATION DIVISION
ROADWAY DESIGN SECTION

RETAINING WALLS

ROUTE | LOCATION PRESCOTT VALLEY PIPELINE & CENTRAL CORE MULTI-USE PATHS (PIPELINE PHASE 1)

Registered Professional Engineer (Civil) CERTIFICATE NO. 49430 GREGORY PATRICK FLY ARIZONA U.S.A. Expires 3/31/2015

DWG NO. S1-1.29

TRACS NO. SL680 01C | TEA-PRV-0(205)T | ____ OF ____

DATE- LOCATION- REVISIONS- FINISHED PLANS- SURVEY NO.

F.H.W.A. REGION	STATE	PROJECT NO.	SHEET NO.	TOTAL SHEETS	AS BUILT
9	ARIZ.	TEA-PRV-0(205)T			
		PRV 0000 YV			

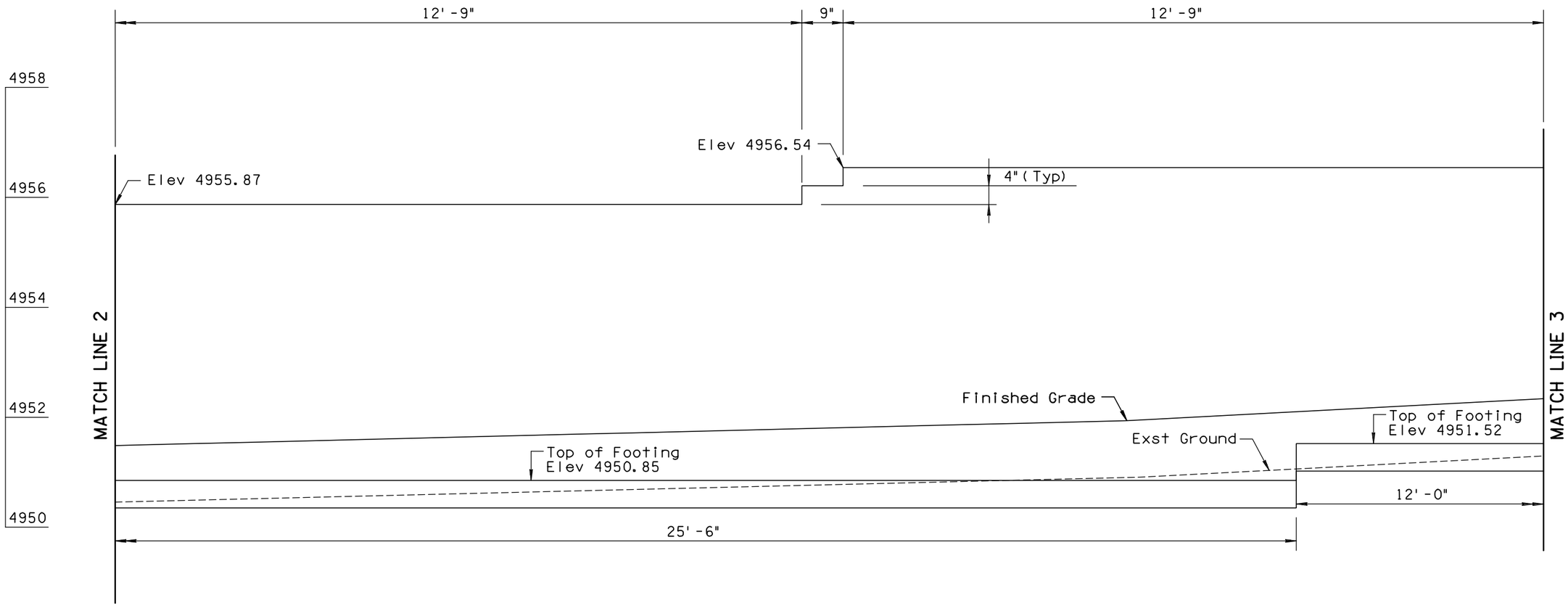

WALL 403

Scale: 1"=1'
Length: 144'-9"

NOTE:

1. See Plans for Horizontal Control.
2. See Detail Q for Additional Wall Information.
3. Minimum 1 foot of cover over the Wall Footing.

	NAME	DATE
DESIGN	SMG	06/14
DRAWN	CPG	06/14
CHECKED	GPF	06/14

PARSONS BRINCKERHOFF

ARIZONA DEPARTMENT OF TRANSPORTATION
INTERMODAL TRANSPORTATION DIVISION
ROADWAY DESIGN SECTION

RETAINING WALLS

ROUTE | LOCATION PRESCOTT VALLEY PIPELINE & CENTRAL CORE MULTI-USE PATHS (PIPELINE PHASE 1)

Registered Professional Engineer (Civil) CERTIFICATE NO. 49450 GREGORY PATRICK FLY ARIZONA U.S.A.
Expires 3/31/2015

DWG NO. S1-1.30

TRACS NO. SL680 01C | TEA-PRV-0(205)T | ___ OF ___

DATE- | LOCATION- | REVISIONS- | FINISHED PLANS- | SURVEY NO.

9/12/2014 T:\Prescott_MUP\SL622_ph1\Structures\SL622_wpln-303.dgn

F.H.W.A. REGION	STATE	PROJECT NO.	SHEET NO.	TOTAL SHEETS	AS BUILT
9	ARIZ.	TEA-PRV-0(205)T			
		PRV 0000 YV			

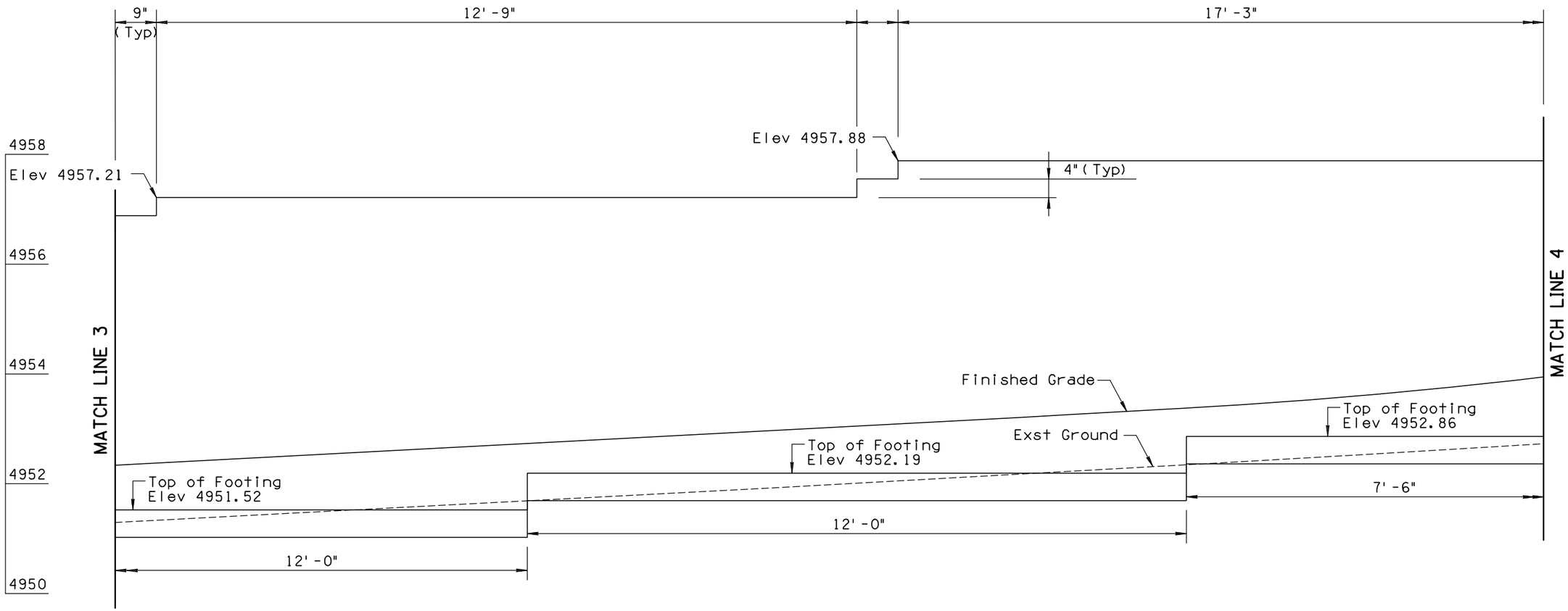

NOTE:

1. See Plans for Horizontal Control.
2. See Detail Q for Additional Wall Information.
3. Minimum 1 foot of cover over the Wall Footing.

WALL 403

Scale: 1"=1'
Length: 144'-9"

	NAME	DATE
DESIGN	SMG	06/14
DRAWN	CPG	06/14
CHECKED	GPF	06/14

PARSONS BRINCKERHOFF

ARIZONA DEPARTMENT OF TRANSPORTATION
INTERMODAL TRANSPORTATION DIVISION
ROADWAY DESIGN SECTION

RETAINING WALLS

ROUTE | LOCATION PRESCOTT VALLEY PIPELINE & CENTRAL CORE MULTI-USE PATHS (PIPELINE PHASE 1)

Registered Professional Engineer (Civil) CERTIFICATE NO. 49450 GREGORY PATRICK FLY ARIZONA U.S.A.
Expires 3/31/2015

DWG NO. S1-1.31

TRACS NO. SL680 01C | TEA-PRV-0(205)T | ___ OF ___

9/12/2014 T:\Prescott_MUP\SL622_ph1\Structures\SL622_wpln-304.dgn

DATE- LOCATION- REVISIONS- FINISHED PLANS- SURVEY NO.

F.H.W.A. REGION	STATE	PROJECT NO.	SHEET NO.	TOTAL SHEETS	AS BUILT
9	ARIZ.	TEA-PRV-0(205)T			
		PRV 0000 YV			

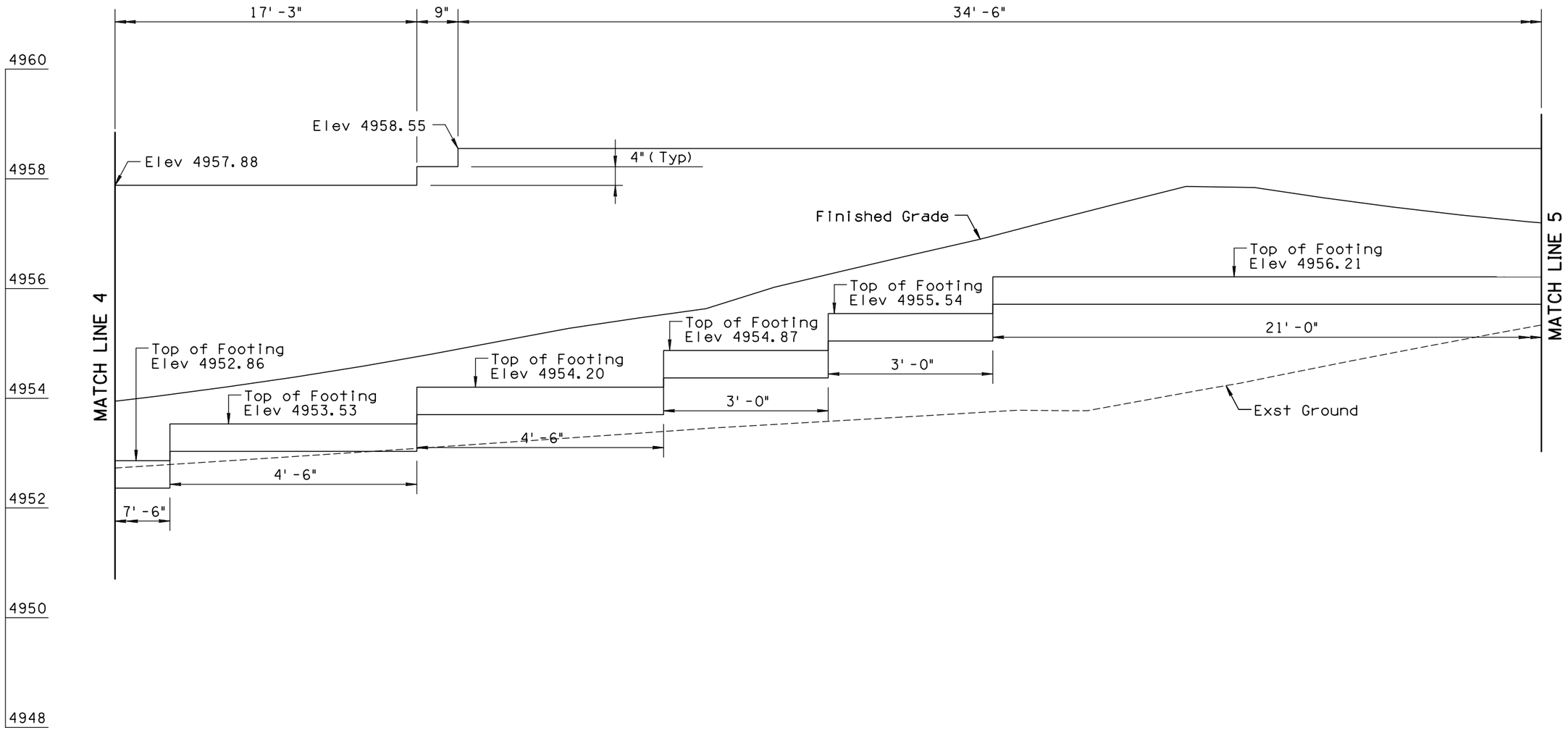

NOTE:

1. See Plans for Horizontal Control.
2. See Detail Q for Additional Wall Information.
3. Minimum 1 foot of cover over the Wall Footing.

WALL 403

Scale: 1"=1'
Length: 144'-9"

	NAME	DATE
DESIGN	SMG	06/14
DRAWN	CPG	06/14
CHECKED	GPF	06/14

PARSONS BRINCKERHOFF

ARIZONA DEPARTMENT OF TRANSPORTATION
INTERMODAL TRANSPORTATION DIVISION
ROADWAY DESIGN SECTION

RETAINING WALLS

ROUTE | LOCATION PRESCOTT VALLEY PIPELINE & CENTRAL CORE MULTI-USE PATHS (PIPELINE PHASE 1)

Registered Professional Engineer (Civil) CERTIFICATE NO. 49450 GREGORY PATRICK FLY ARIZONA U.S.A.
Expires 3/31/2015

DWG NO. S1-1.32

TRACS NO. SL680 01C | TEA-PRV-0(205)T | ___ OF ___

DATE- LOCATION- REVISIONS- FINISHED PLANS- SURVEY NO.

F.H.W.A. REGION	STATE	PROJECT NO.	SHEET NO.	TOTAL SHEETS	AS BUILT
9	ARIZ.	TEA-PRV-0(205)T			
		PRV 0000 YV			

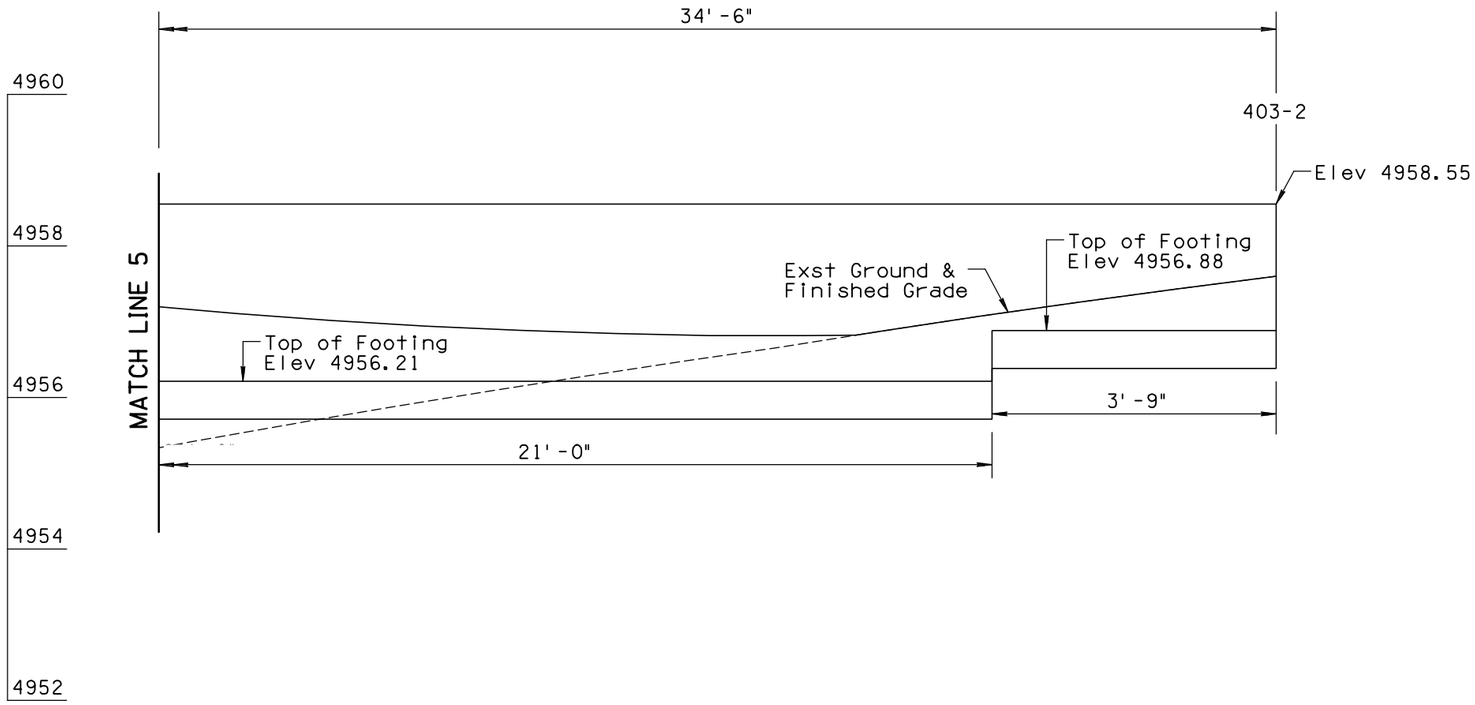

WALL 403

Scale: 1"=1'
Length: 144'-9"
Area: 592.51 sq ft

NOTE:

1. See Plans for Horizontal Control.
2. See Detail Q for Additional Wall Information.
3. Minimum 1 foot of cover over the Wall Footing.

	NAME	DATE
DESIGN	SMG	06/14
DRAWN	CPG	06/14
CHECKED	GPF	06/14

PARSONS BRINCKERHOFF

ARIZONA DEPARTMENT OF TRANSPORTATION
INTERMODAL TRANSPORTATION DIVISION
ROADWAY DESIGN SECTION

RETAINING WALLS

Registered Professional Engineer (Civil) CERTIFICATE NO. 49430 GREGORY PATRICK FLY ARIZONA U.S.A.
Expires 3/31/2015

ROUTE | LOCATION PRESCOTT VALLEY PIPELINE & CENTRAL CORE MULTI-USE PATHS (PIPELINE PHASE 1)

DWG NO. S1-1.33

TRACS NO. SL680 01C | TEA-PRV-0(205)T | ____ OF ____

DATE- LOCATION- REVISIONS- FINISHED PLANS- SURVEY NO.

F.H.W.A. REGION	STATE	PROJECT NO.	SHEET NO.	TOTAL SHEETS	AS BUILT
9	ARIZ.	TEA-PRV-0(205)T			
		PRV 0000 YV			

PART 1 - To be completed by the Landscape Architect or Design Engineer

I. PROJECT DESCRIPTION

A. Owner Name and Address:

Arizona Department of Transportation
205 South 17th Avenue
Phoenix, Arizona 85007-3213

B. Project TRACS Number: SL680 01C

C. Project Location: Prescott Valley Pipeline Phase 1

City: Prescott Valley County: Yavapai

Beginning Latitude (NAD 83): 34°36'24" N
Beginning Longitude (NAD 83): 112°18'46" W

Ending Latitude (NAD 83): 34°36'50" N
Ending Longitude (NAD 83): 112°18'46" W

To obtain the project latitude/longitude data, refer to the Flash Earth web link below (Bing Maps with labels): http://www.flashearth.com/

D. Project Description: New multi-use path construction and corresponding improvements.

II. HYDROLOGIC INFORMATION

A. Project Size:
Length (Mi.) 0.77
Area (Ac.) 1.40

B. Area to be Graded (Ac.) *: 1.77
* Blading of the shoulder build-up area is considered as grading and ground disturbance and should be covered by stormwater and/or other environmental regulations.

C. Percentage of the site that is impervious before and after construction:
Percentage before Construction: 0.9
Percentage after Construction: 0.9

D. Receiving Water(s), refer to the Arizona Department of Water Resources Web Link below (USGS Topo) : https://glsweb.azwater.gov/WellRegistry/Default.aspx

Agua Fria River

III. PRESERVATION OF EXISTING VEGETATION

A. In accordance with the specifications, existing vegetation will be preserved. Clearing limits shall be confined to areas that require grading. Existing vegetation outside the boundaries of the cleared area shall be protected from damage by construction activities. Existing trees within the area to be cleared shall be preserved and protected, wherever possible.

IV. SOIL STABILIZATION MEASURES

A. All disturbed soil, which will not be paved, riprapped or otherwise covered to prevent erosion, will be revegetated and/or landscaped in accordance with the project plans and specifications.

B. Scheduling of the revegetation effort can be found on PART 2 of this sheet under SCHEDULE OF MAJOR ACTIVITIES.

V. MEASURES TO CONTROL EROSION AND SEDIMENT

A. Temporary Erosion and Sediment Controls: (Refer to the Following SWPPP Site Plan and Specifications)

___ Erosion Control Mattings
___ Temporary Diversion Dikes
___ Check Dams
___ Rock Inlet/Outlet Protection
___ Sediment Control Berms
___ Silt Fences
X Wattles (Excelsior/Straw)
___ Excelsior Logs / Sediment Logs
___ Seeding (Class II with mulch)
___ Others Describe:

B. Permanent Erosion and Sediment Controls and Post-construction Storm Water Management Measures: (Refer to SWPPP Site Plan and Specifications)

___ Crown Ditch/Dike
___ Rock Protection
___ Rock Riprap Channel Lining
___ Sediment Basin
___ Embankment Curb
___ Spillways and Downdrains
___ Minibenching
X Seeding established as a perennial vegetative cover with a density of 70% of the native background vegetative cover.
___ Others Describe:

VI. MAINTENANCE AND INSPECTIONS

A. Frequency of Inspections:

___ At least once every 7 calendar days, OR
X Every 14 calendar days and within 24 hours after a rainfall of 0.5 inches (12.7 mm) or more.

NOTE: RAINFALL GAUGE TO BE KEPT ON-SITE TO DETERMINE DEPTH OF RAINFALL

B. Inspection Procedure:

ADOT's Contractor's Inspection Log and Compliance Evaluation Report (CER) will be completed by the contractor or his representative and will be kept on file for 3 years. A signed copy of the CER will be sent to the ADOT resident engineer. If repairs are necessary, they shall be initiated within 24 hours of the inspection report.

PART 2 - To be completed by ADOT & CONTRACTOR

http://www.azdot.gov/Inside_adot/OES/Water_Quality/Stormwater/Docs/swppp_construction_template.dot

I. SCHEDULE OF MAJOR ACTIVITIES

A. Project Schedule:

Start Date:

End Date:

B. Construction Sequencing Schedule: (Attach Additional Sheets)
Construction Activities

II. INVENTORY OF POLLUTANTS

A. The materials or substances checked below are expected to be onsite during construction:

___ Concrete ___ Asphalt
___ Paints ___ Fertilizer
___ Herbicides ___ Wood
___ Fuel ___ Oil
___ Others, List:

III. POLLUTION CONTROL MEASURES

A. Other Best Management Practices:

___ Wind Erosion and Dust Control
___ Solid Waste Management
___ Equipment Maintenance Procedures
___ Designated Washout Areas
___ Stabilized Construction Entrance
___ Protected Chemical and Material Storage Area
___ Other, Describe:

IV. SPILL PREVENTION AND RESPONSE

A. Spill Prevention:
The procedures outlined in the Best Management Practices listed under Pollution Control Measures will be followed to prevent and contain spills of hazardous material. These preventative action include BMP's on equipment maintenance and proper handling, storage and disposal of chemicals and materials. All manufacturer's recommendations for usage, clean-up and disposal shall be followed.

B. Spill Response:
In the event of any accidental spill of chemicals or hazardous materials, contact the ADOT Traffic Operations Center at 800-379-3701. If a reportable quantity is discharged into the storm water, ADOT shall contact the National Response Center and document the spill to the EPA. ADOT's Hazardous Materials Specialist shall provide instructions.

V. CERTIFICATION OF COMPLIANCE WITH FEDERAL, STATE AND LOCAL REGULATIONS

A. This Storm Water Pollution Prevention Plan (SWPPP) has been prepared in accordance with the latest updated version of ADOT's EROSION AND POLLUTION CONTROL MANUAL FOR HIGHWAY DESIGN AND CONSTRUCTION, published by ADOT Intermodal Transportation Division.

___ SWPPP is in compliance with other Federal, State Laws, or Local Regulations.

VI. POLLUTION PREVENTION PLAN CERTIFICATION

A. I certify under penalty of law that I have personally examined and am familiar with the information submitted in this application and all attachments and that, based on my inquiry of those persons immediately responsible for obtaining the information contained in the application, I believe that the information is true, accurate and complete. I am aware that there are significant penalties for submitting false information, including the possibility of fine and imprisonment. (Applies to VI. B., C., and D)

B. The operator/contractor as defined in AZPDES should sign the SWPPP in accordance with CGP Part VIII. J, and retain the SWPPP on-site at the construction site or other location easily accessible during normal business hours.

Signature: (operator/contractor)
Date:
Name:
Title:
Company:

C. ADOT Resident Engineer
Signature: (owner)
Date:
Name:
Title:
ADOT District:

D. MUNICIPALITY for Municipal Separate Storm Sewer System (MS4)
Signature:
Date:
Name:
Title:
MS4 Name:

VII. OTHER REQUIREMENTS

A. A copy of the General Permit and NOI are attached in accordance to AZPDES General Permit for Storm Water Discharges From Construction Activities To The Water Of The United States.

B. Projects that are within ¼ mile of impaired or unique waters require the SWPPP to be sent to ADEQ in combination with the NOI. Refer to the Arizona Outstanding, Impaired and Not-Attaining Waters *.PDF Maps by County web link:
https://www.azdot.gov/Inside_adot/OES/Water_Quality/Stormwater/outstanding_unique_waters_maps_by_county.asp

C. For further requirements, check the ADEQ's Smart NOI Web Page: https://az.gov/app/smartnoi/

	NAME	DATE
DESIGN	SMG	06/14
DRAWN	CPG	06/14
CHECKED	GPF	06/14

ARIZONA DEPARTMENT OF TRANSPORTATION
INTERMODAL TRANSPORTATION DIVISION
ROADWAY DESIGN SECTION

PARSONS BRINCKERHOFF

AZPDES SWPPP INDEX SHEET

PRELIMINARY

ROUTE | LOCATION: PRESCOTT VALLEY PIPELINE & CENTRAL CORE MULTI-USE PATHS (PIPELINE PHASE 1)

DWG NO. E1-1.01

TRACS NO. SL680 01C | TEA-PRV-0(205)T | ___ OF ___

DATE- LOCATION- REVISIONS- FINISHED PLANS- SURVEY NO.

F.H.W.A. REGION	STATE	PROJECT NO.	SHEET NO.	TOTAL SHEETS	AS BUILT
9	ARIZ.	TEA-PRV-0(205)T			
		PRV 0000 YV			

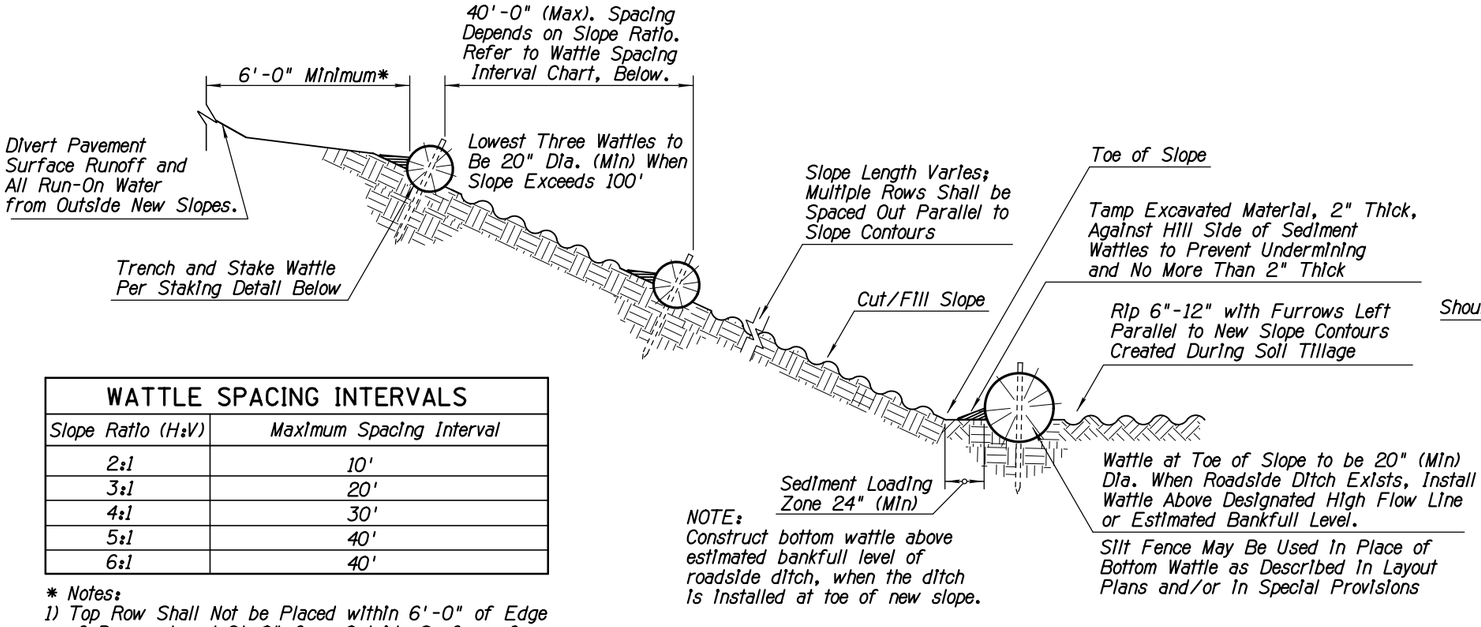

NOTE:
Construct bottom wattle above estimated bankfull level of roadside ditch, when the ditch is installed at toe of new slope.

SECTION (NTS)

WATTLE SPACING INTERVALS	
Slope Ratio (H:V)	Maximum Spacing Interval
2:1	10'
3:1	20'
4:1	30'
5:1	40'
6:1	40'

* Notes:
1) Top Row Shall Not be Placed within 6'-0" of Edge of Pavement and 9'-0" from Outside Surface of Barrier.
2) For erosive soils, place rows of wattles closer together.
3) For soils with low erosive potential, place rows of wattles further apart.

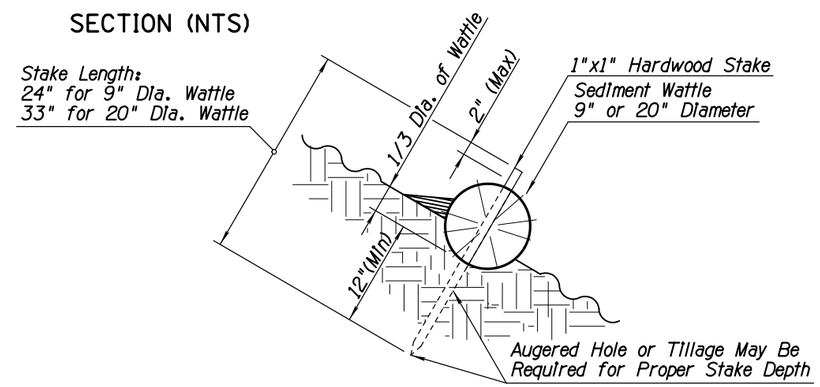

SEDIMENT WATTLE STAKING DETAIL (NTS)

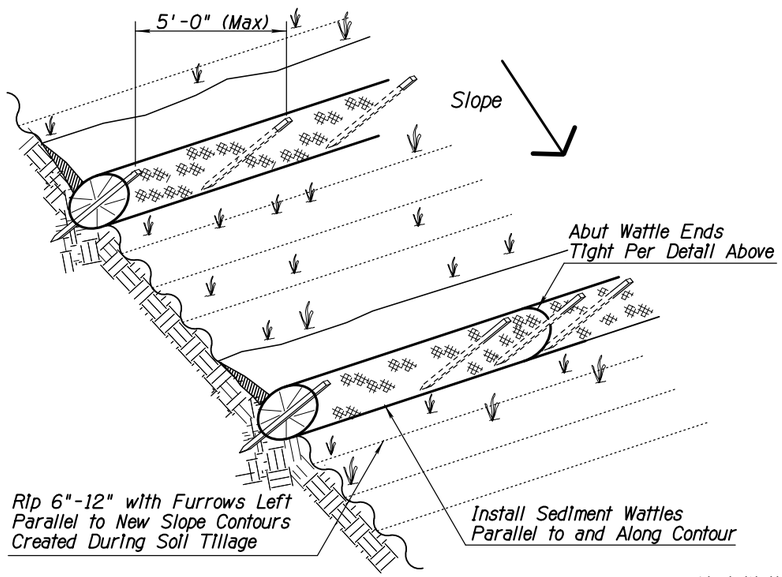

SEDIMENT WATTLE LAYOUT (NTS)

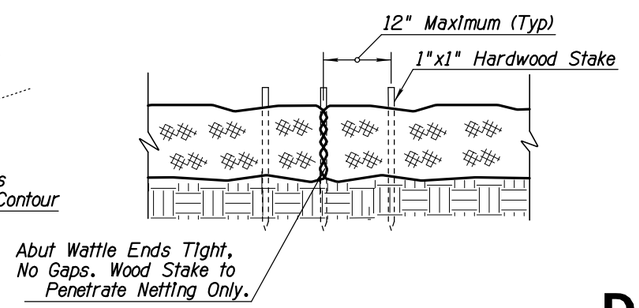

SEDIMENT WATTLE OVERLAP (NTS)

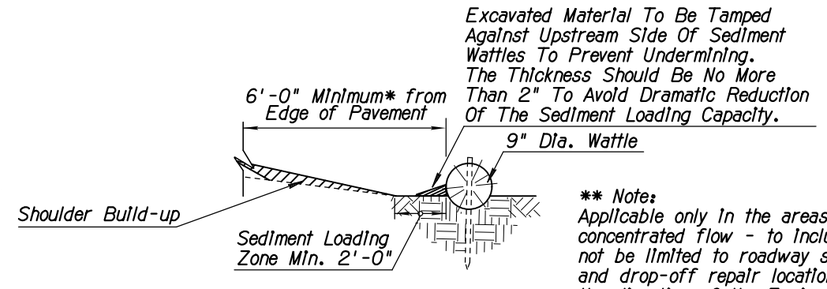

** Note:
Applicable only in the areas of concentrated flow - to include but not be limited to roadway sag spots and drop-off repair locations as per the direction of the Engineer.

NEW SHOULDER BUILDUP ** PROTECTION SECTION (NTS)

NOTES:

1. Install Sediment Wattles as slopes are constructed to grade or as directed by the Engineer. Select, Install and maintain in conformance with manufacturers' specifications to meet site conditions for slope protection and in accordance with good engineering practices. No Sediment Wattles shall be installed in urban freeway medians, nor where cable barrier systems are employed.
2. Sediment Wattles shall be in continuous contact with trench bottom and sides. Do not overlap wattle ends on top of each other. A 20" Dia. wattle may be made from 2-3 rolled excelsior or straw blankets.
3. Butt adjoining wattles tightly against each other. Drive the first end stake of the second wattle at an angle toward the first wattle to help abut them tightly.
4. Repair any rills or gullies promptly. Make field adjustments and corrections of Wattle BMP immediately if it is causing flooding, erosion, and/or affecting roadway safety.
5. Construction of cut slopes 2:1 and steeper in soil and rock materials that can be ripped shall be constructed, whenever possible, by Minibenching. Refer to Slope Minibenching BMP Detail.
6. Loosening surface soil is not required where Minibenches are used. For seeded areas, tillage shall be performed to form minor ridges and furrows parallel to new slope contours and as specified in Section 805 of the Standard Specifications and these special provisions.
7. Divert and direct run-on water from outside of the slopes to the spillways and/or rock riprap/rock mulch. Diversion dikes and/or ditches are necessary on natural undisturbed slopes beyond the top limits of new slopes to divert run-on water.
8. Installation and maintenance of Sediment Wattle BMPs shall not negatively impact traffic safety, nor the designed function of roadway or bridge drainage facilities.
9. Install and maintain Sediment Wattle BMPs to carry the stormwater of at least 2-year, 24-hour events.
10. The Sediment Wattle BMP's pay/bid item shall include all materials used for this BMP: all ground preparation, furnishing, installing, maintenance, final removal, and disposal of this temporary BMP, as well as returning the area to an acceptable condition as approved by the Engineer.
11. Refer to Standard Specification Section 810-2.06(C) for Sediment Wattle material specifications.
12. Make field adjustments and corrections to ensure NO sensitive biological resources (native species / habitats) will be adversely impacted.

DETAIL ES1
SEDIMENT WATTLE

	NAME	DATE
DESIGN	SMG	06/14
DRAWN	CPG	06/14
CHECKED	GPF	06/14

PARSONS BRINCKERHOFF

ARIZONA DEPARTMENT OF TRANSPORTATION
INTERMODAL TRANSPORTATION DIVISION
ROADWAY DESIGN SECTION

STORMWATER QUALITY PROTECTION & EROSION/SEDIMENT CONTROL DETAILS

ROUTE LOCATION PRESCOTT VALLEY PIPELINE & CENTRAL CORE MULTI-USE PATHS (PIPELINE PHASE 1)

Registered Professional Engineer (Civil) CERTIFICATE NO. 49430 GREGORY PATRICK FLY ARIZONA U.S.A.
Expires 3/31/2015

DWG NO. E1-1.02

TRACS NO. SL680 01C | TEA-PRV-0(205)T | ____ OF ____

DATE- LOCATION- REVISIONS- FINISHED PLANS- SURVEY NO.

9/12/2014 T:\Prescott_MUP\SL622_ph1\SWPPP\SL622wattle.dgn

F.H.W.A. REGION	STATE	PROJECT NO.	SHEET NO.	TOTAL SHEETS	AS BUILT
9	ARIZ.	TEA-PRV-0(205)T			
		PRV 0000 YV			

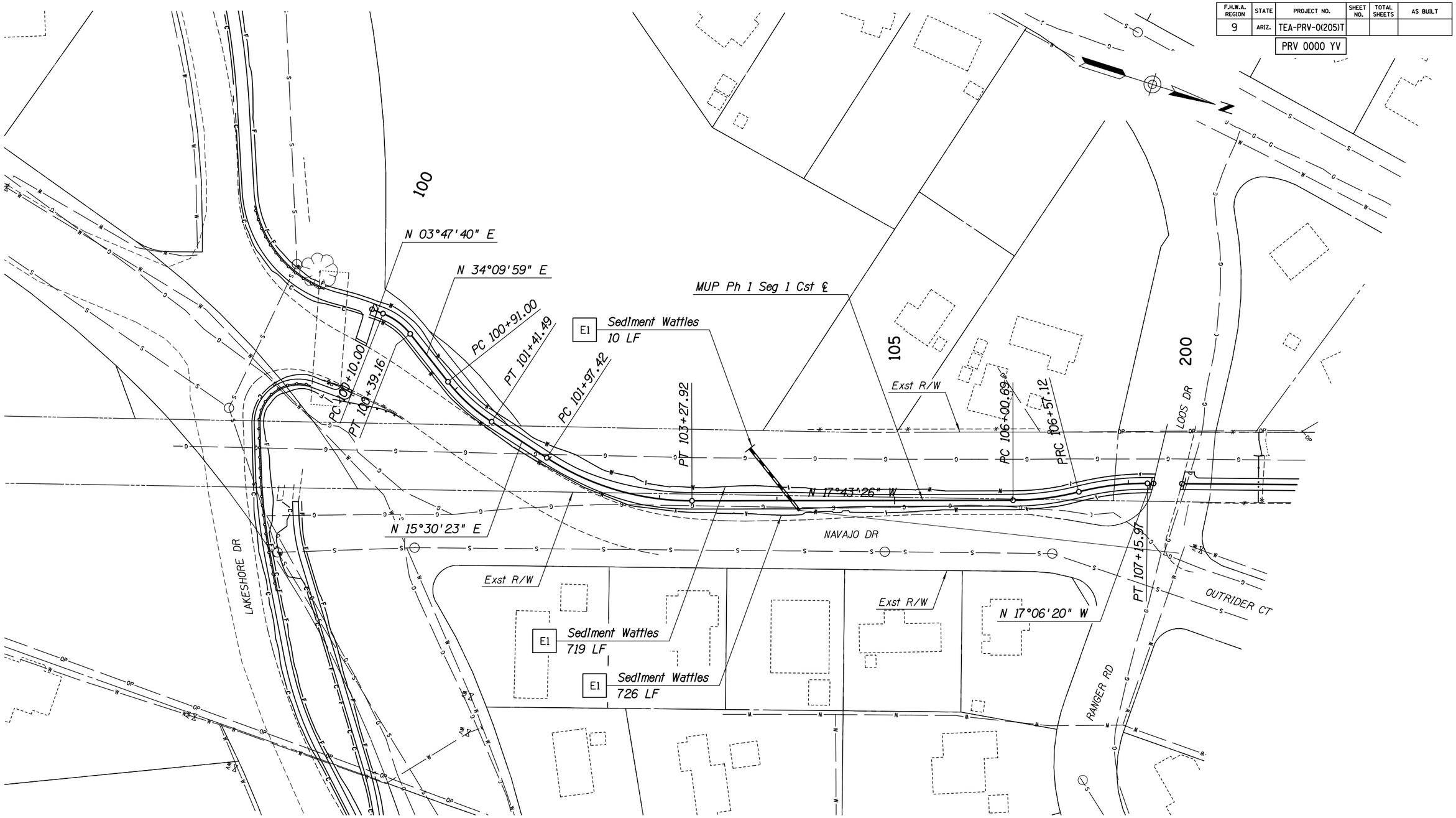

LEGEND:

Sediment Wattle

	NAME	DATE
DESIGN	SMG	06/14
DRAWN	CPG	06/14
CHECKED	GPF	06/14

PARSONS BRINCKERHOFF

ARIZONA DEPARTMENT OF TRANSPORTATION
INTERMODAL TRANSPORTATION DIVISION
ROADWAY DESIGN SECTION

EROSION CONTROL PLAN
Sta 100+00 to Sta 107+17.73

ROUTE | LOCATION PRESCOTT VALLEY PIPELINE & CENTRAL CORE MULTI-USE PATHS (PIPELINE PHASE 1)

Registered Professional Engineer (Civil) CERTIFICATE NO. 49430 GREGORY PATRICK FLY Date Signed ARIZONA U.S.A. Expires 3/31/2015

DWG NO. E1-2.01

TRACS NO. SL680 01C | TEA-PRV-0(205)T | ___ OF ___

9/12/2014 T:\Prescott_MUP\SL622_ph1\SWPPP\SL622_ec01.dgn

F.H.W.A. REGION	STATE	PROJECT NO.	SHEET NO.	TOTAL SHEETS	AS BUILT
9	ARIZ.	TEA-PRV-0(205)T			

PRV 0000 YV

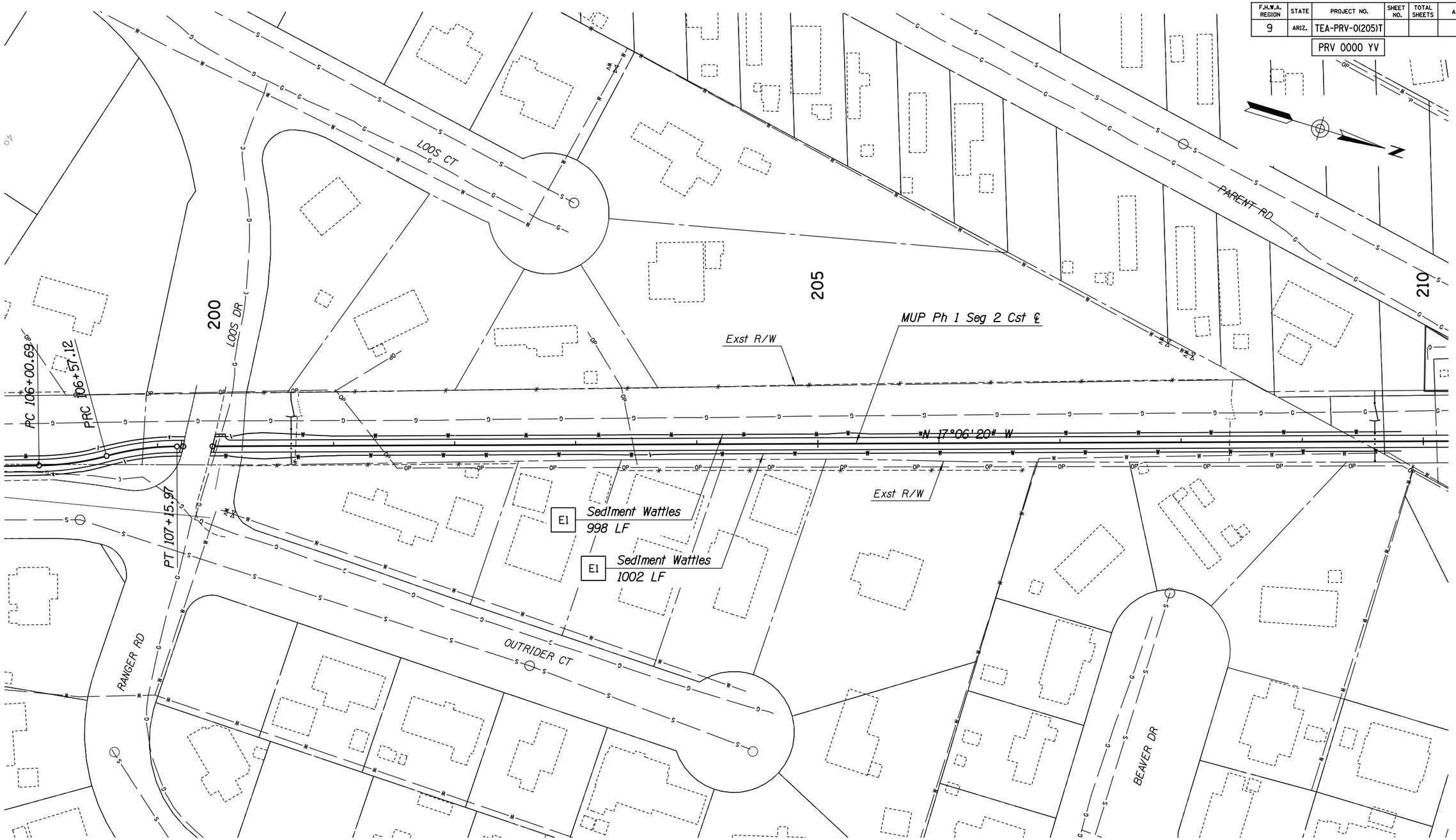

LEGEND:

Sediment Wattle

	NAME	DATE
DESIGN	SMG	06/14
DRAWN	CPG	06/14
CHECKED	GPF	06/14

PARSONS BRINCKERHOFF

ARIZONA DEPARTMENT OF TRANSPORTATION
INTERMODAL TRANSPORTATION DIVISION
ROADWAY DESIGN SECTION

EROSION CONTROL PLAN
Sta 200+00 to Sta 210+00

ROUTE | LOCATION PRESCOTT VALLEY PIPELINE & CENTRAL CORE MULTI-USE PATHS (PIPELINE PHASE 1)

Registered Professional Engineer (Civil) CERTIFICATE NO. 49450 GREGORY PATRICK FLY ARIZONA U.S.A.
Expires 3/31/2015

DWG NO. E1-2.02

TRACS NO. SL680 01C | TEA-PRV-0(205)T | ____ OF ____

DATE- LOCATION- REVISIONS- FINISHED PLANS- SURVEY NO.

9/12/2014 T:\Prescott_MUP\SL622_ph1\SWPPP\SL622_ec02.dgn

F.H.W.A. REGION	STATE	PROJECT NO.	SHEET NO.	TOTAL SHEETS	AS BUILT
9	ARIZ.	TEA-PRV-0(205)T			
		PRV 0000 YV			

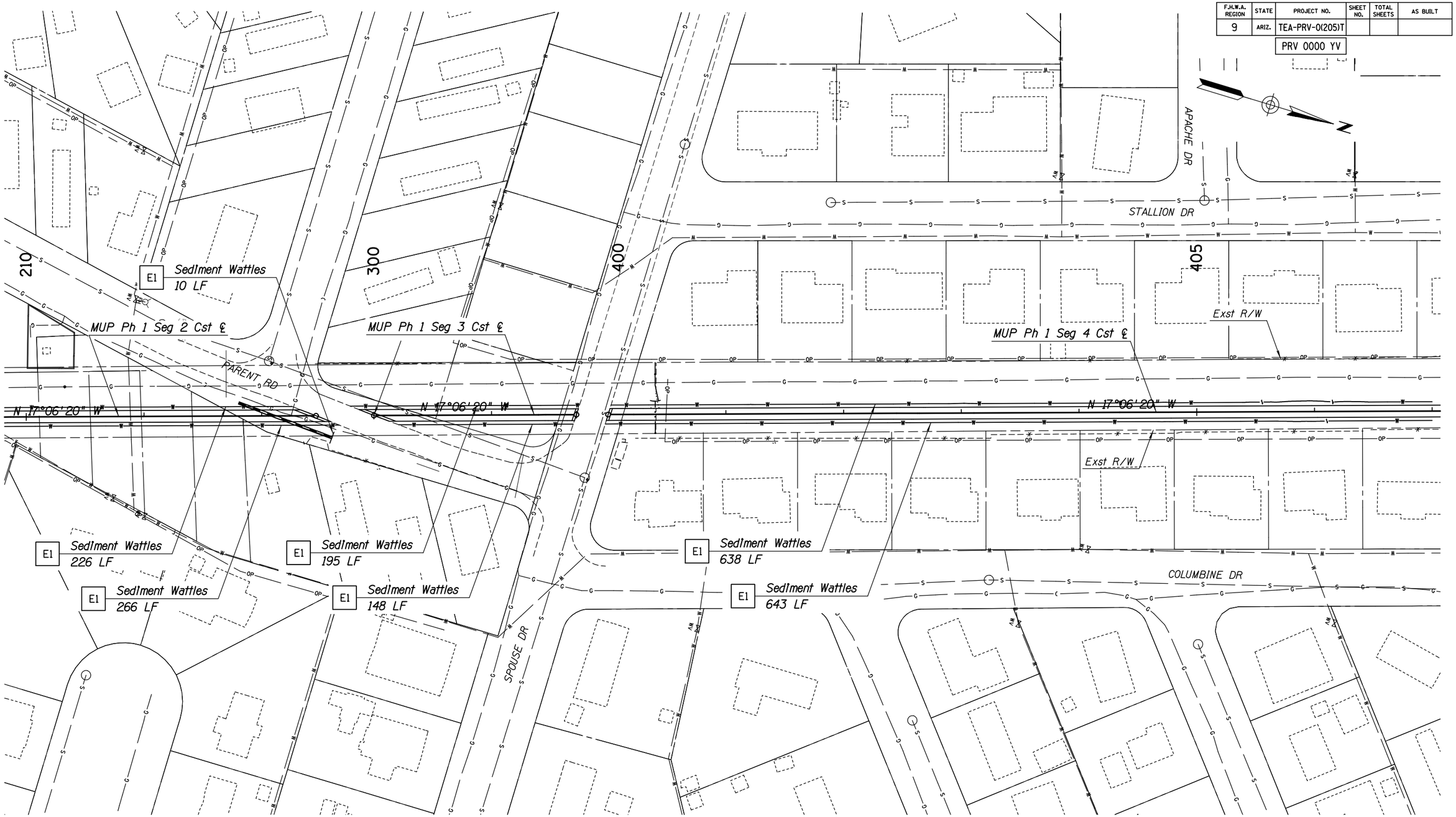

LEGEND:

Sediment Wattle

	NAME	DATE
DESIGN	SMG	06/14
DRAWN	CPG	06/14
CHECKED	GPF	06/14

PARSONS BRINCKERHOFF

ARIZONA DEPARTMENT OF TRANSPORTATION
INTERMODAL TRANSPORTATION DIVISION
ROADWAY DESIGN SECTION

EROSION CONTROL PLAN
Sta 210+00 to Sta 406+40

ROUTE | LOCATION PRESCOTT VALLEY PIPELINE & CENTRAL CORE MULTI-USE PATHS (PIPELINE PHASE 1)

Registered Professional Engineer (Civil) CERTIFICATE NO. 49430 GREGORY PATRICK FLY ARIZONA U.S.A.
Expires 3/31/2015

DWG NO. E1-2.03

TRACS NO. SL680 01C | TEA-PRV-0(205)T | ____ OF ____

9/12/2014 T:\Prescott_MUP\SL622_ph1\SWPPP\SL622_ec03.dgn

F.H.W.A. REGION	STATE	PROJECT NO.	SHEET NO.	TOTAL SHEETS	AS BUILT
9	ARIZ.	TEA-PRV-0(205)T			
		PRV 0000 YV			

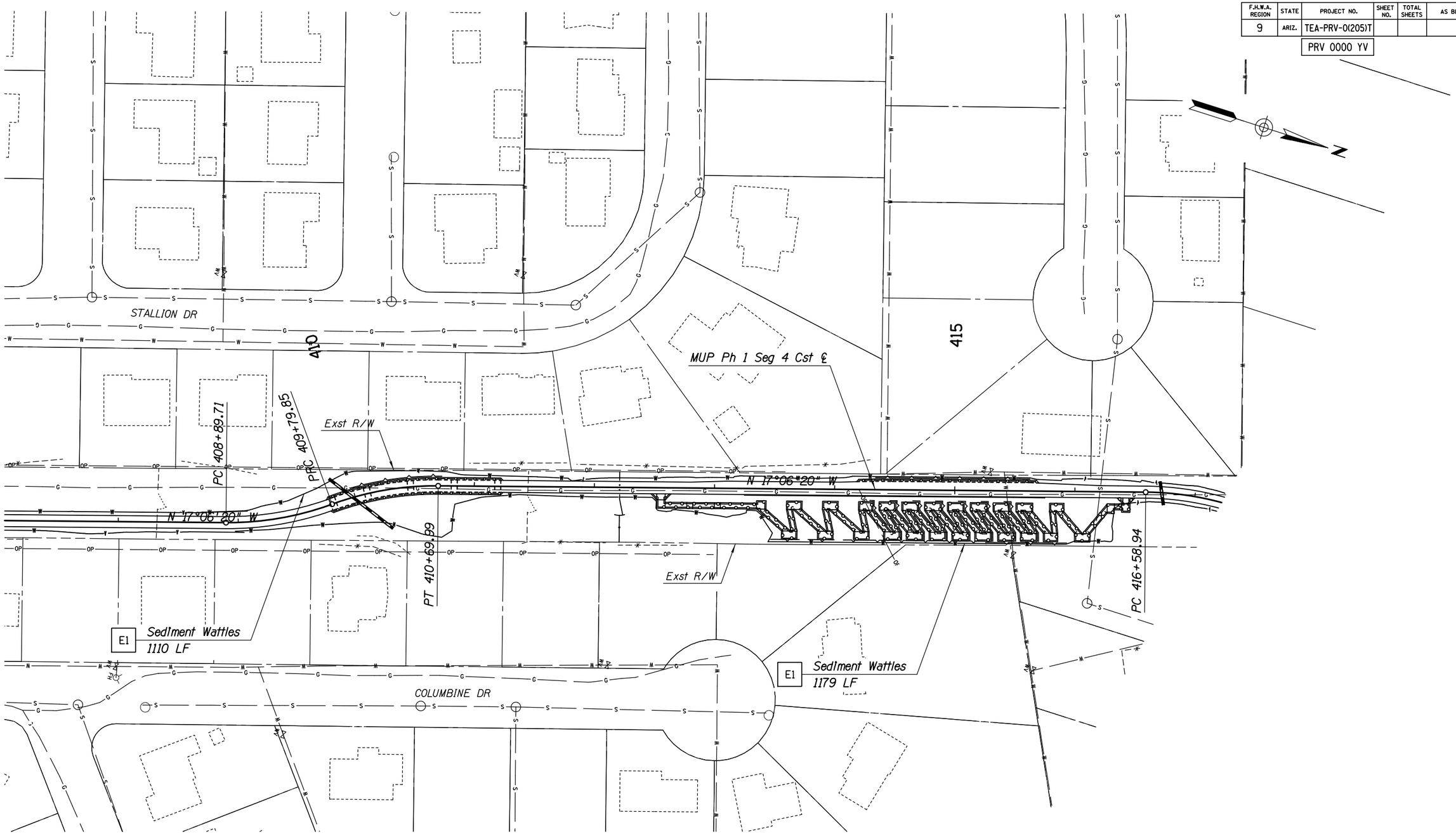

LEGEND:

Sediment Wattle

	NAME	DATE
DESIGN	SMG	06/14
DRAWN	CPG	06/14
CHECKED	GPF	06/14

PARSONS BRINCKERHOFF

ARIZONA DEPARTMENT OF TRANSPORTATION
INTERMODAL TRANSPORTATION DIVISION
ROADWAY DESIGN SECTION

EROSION CONTROL PLAN
Sta 406+40 to Sta 417+40

Registered Professional Engineer (Civil) CERTIFICATE NO. 49430 GREGORY PATRICK FLY ARIZONA U.S.A.
Expires 3/31/2015

ROUTE | LOCATION PRESCOTT VALLEY PIPELINE & CENTRAL CORE MULTI-USE PATHS (PIPELINE PHASE 1)

DWG NO. EI-2.04

TRACS NO. SL680 01C | TEA-PRV-0(205)T | ___ OF ___

9/12/2014 T:\Prescott_MUP\SL622_ph1\SWPPP\SL622_ec04.dgn

DATE- LOCATION- REVISIONS- FINISHED PLANS- SURVEY NO.

F.H.W.A. REGION	STATE	PROJECT NO.	SHEET NO.	TOTAL SHEETS	AS BUILT
9	ARIZ.	TEA-PRV-0(205)T			
		PRV 0000 YV			

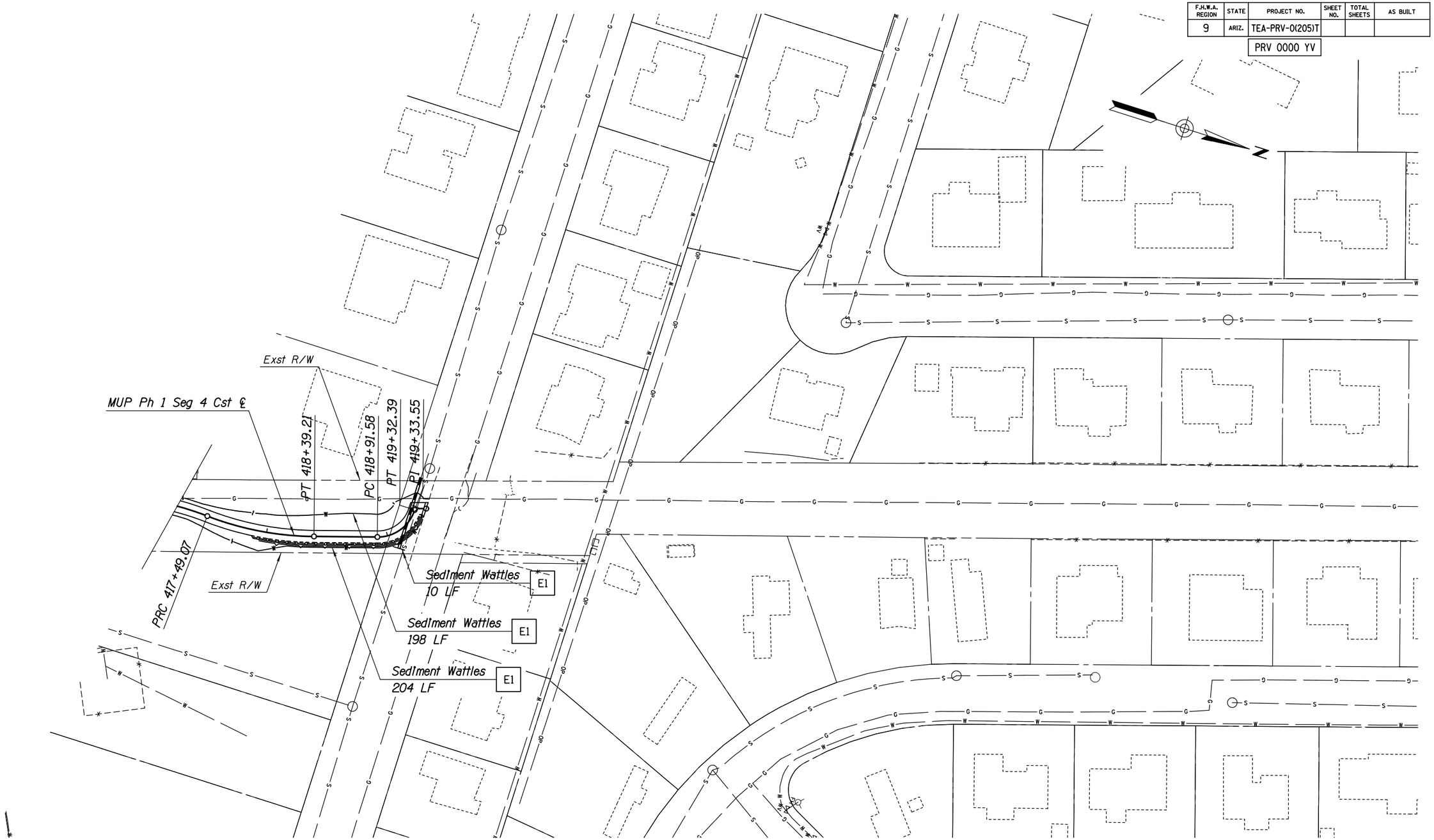

LEGEND:

—W———W— Sediment Wattle

	NAME	DATE
DESIGN	SMG	06/14
DRAWN	CPG	06/14
CHECKED	GPF	06/14

PARSONS BRINCKERHOFF

ARIZONA DEPARTMENT OF TRANSPORTATION
INTERMODAL TRANSPORTATION DIVISION
ROADWAY DESIGN SECTION

EROSION CONTROL PLAN
Sta 417+40 to Sta 419+42.70

Registered Professional Engineer (Civil) CERTIFICATE NO. 49430 GREGORY PATRICK FLY ARIZONA U.S.A.
Expires 3/31/2015

ROUTE | LOCATION PRESCOTT VALLEY PIPELINE & CENTRAL CORE MULTI-USE PATHS (PIPELINE PHASE 1)

DWG NO. EI-2.05

TRACS NO. SL680 01C | TEA-PRV-0(205)T | ___ OF ___

DATE- LOCATION- REVISIONS- FINISHED PLANS- SURVEY NO.

9/12/2014 T:\Prescott_MUP\SL622_ph1\SWPPP\SL622_ec05.dgn

F.H.W.A. REGION	STATE	PROJECT NO.	SHEET NO.	TOTAL SHEETS	AS BUILT
9	ARIZ.	TEA-PRV-0(205)T			

PRV 0000 YV

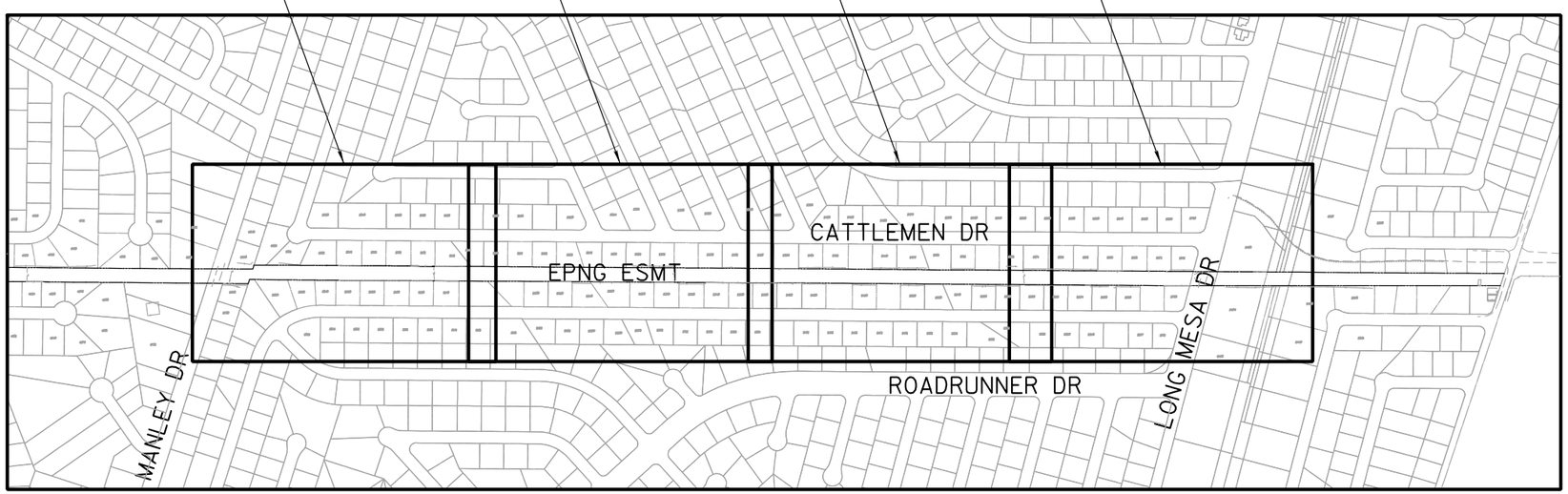

PIPELINE PHASE 2

Legend:

- (XXX) *Geometric Control Point*
- (XXX) *Geometric Curve Reference*
- (X) *Pipe Symbol*
- (MH / X) *Manhole Symbol*
- (PE / X) *Pipe Extension Symbol*
- (X) *Barrier Symbol*
- [EX] *Erosion Control Reference*

	NAME	DATE
DESIGN	SMG	06/14
DRAWN	CPG	06/14
CHECKED	GPF	06/14

ARIZONA DEPARTMENT OF TRANSPORTATION
INTERMODAL TRANSPORTATION DIVISION
ROADWAY DESIGN SECTION

PARSONS BRINCKERHOFF

KEYMAP

ROUTE | LOCATION PRESCOTT VALLEY PIPELINE & CENTRAL CORE MULTI-USE PATHS (PIPELINE PHASE 2)

Registered Professional Engineer (Civil) CERTIFICATE NO. 49430 GREGORY PATRICK FLY ARIZONA U.S.A. Expires 3/31/2015

DWG NO. G2-1.01

TRACS NO. SL680 01C | TEA-PRV-0(205)T | ____ OF ____

DATE- | LOCATION- | REVISIONS- | FINISHED PLANS- | SURVEY NO.

F.H.W.A. REGION	STATE	PROJECT NO.	SHEET NO.	TOTAL SHEETS	AS BUILT
9	ARIZ.	TEA-PRV-0(205)T			
		PRV 0000 YV			

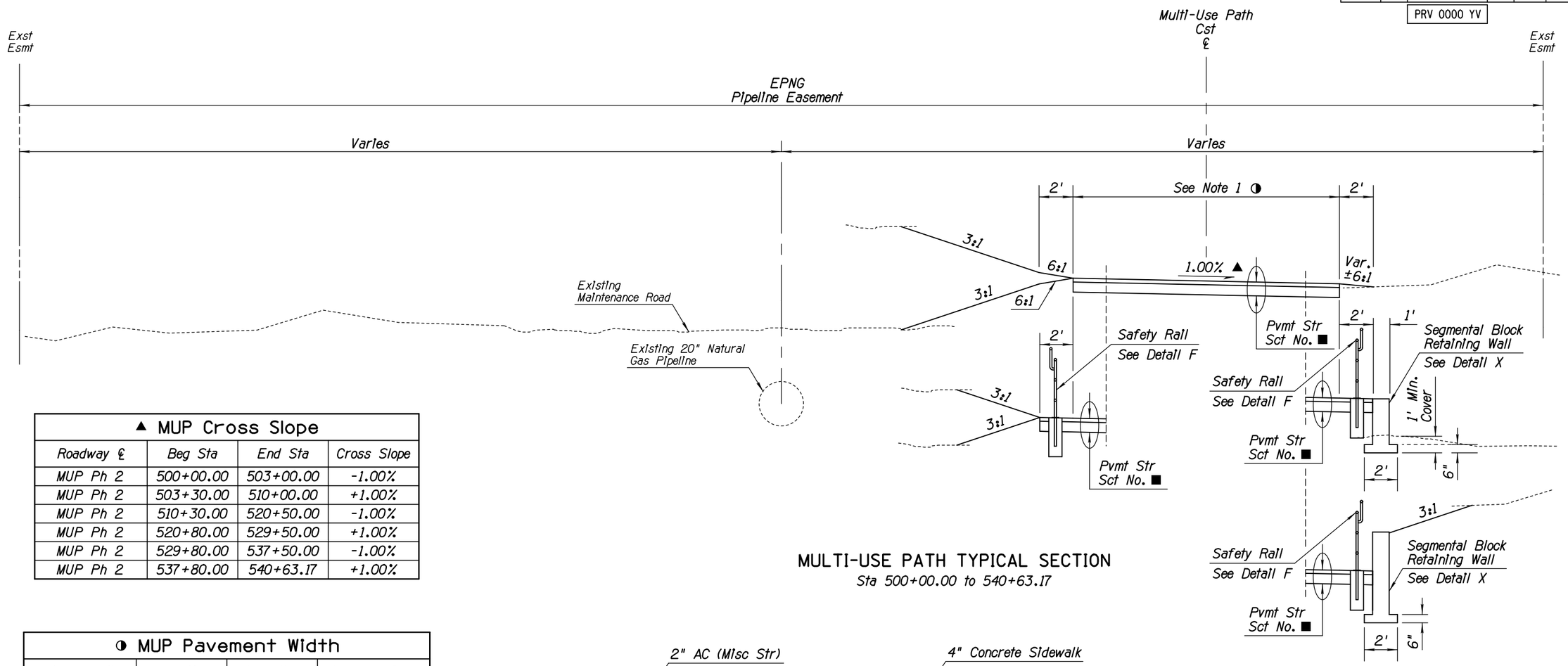

MULTI-USE PATH TYPICAL SECTION
Sta 500+00.00 to 540+63.17

▲ MUP Cross Slope			
Roadway ℄	Beg Sta	End Sta	Cross Slope
MUP Ph 2	500+00.00	503+00.00	-1.00%
MUP Ph 2	503+30.00	510+00.00	+1.00%
MUP Ph 2	510+30.00	520+50.00	-1.00%
MUP Ph 2	520+80.00	529+50.00	+1.00%
MUP Ph 2	529+80.00	537+50.00	-1.00%
MUP Ph 2	537+80.00	540+63.17	+1.00%

◑ MUP Pavement Width			
Roadway ℄	Beg Sta	End Sta	Pavement Width
MUP Ph 2	500+00.00	501+45.00	12'
MUP Ph 2	501+75.00	523+50.00	10'
MUP Ph 2	524+10.00	527+20.00	12'
MUP Ph 2	527+80.00	540+63.17	10'

■ Pavement Structural Sections			
Roadway ℄	Beg Sta	End Sta	Pvmt Str Sct No.
MUP Ph 2	500+00.00	502+22.00	1
MUP Ph 2	502+22.00	504+65.00	2
MUP Ph 2	504+65.00	507+70.00	1
MUP Ph 2	507+70.00	510+00.00	2
MUP Ph 2	510+00.00	540+63.17	1

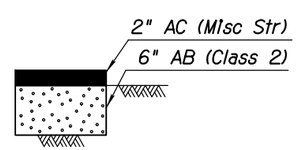

Total Thickness = 8"

PAVEMENT STRUCTURAL SECTION NO. 1
Multi-Use Path

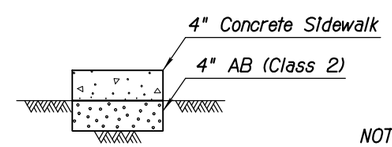

Total Thickness = 8"

PAVEMENT STRUCTURAL SECTION NO. 2
Multi-Use Path
Switchback Path and Landings

NOTES:

1. For Additional Information, See Grading Tables on DWG NO. G2-2.02.
2. See Detail H & I for Retaining Wall Information & Limits.
3. See Plan Sheets for Safety Rail & Retaining Wall Locations.

	NAME	DATE
DESIGN	SMG	06/14
DRAWN	CPG	06/14
CHECKED	GPF	06/14

PARSONS BRINCKERHOFF

ARIZONA DEPARTMENT OF TRANSPORTATION
INTERMODAL TRANSPORTATION DIVISION
ROADWAY DESIGN SECTION

TYPICAL SECTION

Registered Professional Engineer (Civil) CERTIFICATE NO. 49430 GREGORY PATRICK FLY ARIZONA U.S.A.
Expires 3/31/2015

ROUTE | LOCATION PRESCOTT VALLEY PIPELINE & CENTRAL CORE MULTI-USE PATHS (PIPELINE PHASE 2)

DWG NO. G2-2.01

TRACS NO. SL680 01C | TEA-PRV-0(205)T | ___ OF ___

9/12/2014 T:\Prescott_MUP\SL641_ph2\DATA\SL641_ts01.dgn

DATE- LOCATION- REVISIONS- FINISHED PLANS- SURVEY NO.

F.H.W.A. REGION	STATE	PROJECT NO.	SHEET NO.	TOTAL SHEETS	AS BUILT
9	ARIZ.	TEA-PRV-0(205)T			
		PRV 0000 YV			

MUP Grading - Lt Edge			
Roadway ℄	Beg Sta	End Sta	End Condition
MUP Ph 2	500+00.00	500+06.00	Cut
MUP Ph 2	500+06.00	500+14.00	Fill
MUP Ph 2	500+14.00	500+79.00	Cut
MUP Ph 2	500+79.00	501+11.00	2' Grading
MUP Ph 2	501+11.00	502+22.00	Fill
MUP Ph 2	504+45.00	507+75.00	2' Grading
MUP Ph 2	509+95.00	511+27.00	2' Grading
MUP Ph 2	511+27.00	512+57.00	Cut
MUP Ph 2	512+57.00	515+49.00	2' Grading
MUP Ph 2	515+49.00	517+00.00	Cut
MUP Ph 2	517+00.00	522+57.00	2' Grading
MUP Ph 2	522+57.00	523+37.00	Fill
MUP Ph 2	523+37.00	524+42.00	2' Grading
MUP Ph 2	524+42.00	525+25.00	Cut
MUP Ph 2	525+25.00	530+54.00	Fill
MUP Ph 2	530+54.00	532+54.00	2' Grading
MUP Ph 2	532+54.00	536+24.00	Cut
MUP Ph 2	536+24.00	537+40.00	Fill
MUP Ph 2	537+40.00	537+82.00	2' Grading
MUP Ph 2	537+82.00	539+00.00	Fill
MUP Ph 2	539+00.00	540+25.00	2' Grading
MUP Ph 2	540+25.00	540+55.00	Fill
MUP Ph 2	540+55.00	540+63.17	2' Grading

MUP Grading - Rt Edge			
Roadway ℄	Beg Sta	End Sta	End Condition
MUP Ph 2	500+00.00	500+14.00	Fill
MUP Ph 2	500+14.00	500+32.00	Cut
MUP Ph 2	500+32.00	500+59.00	2' Grading
MUP Ph 2	500+59.00	500+65.00	Fill
MUP Ph 2	500+85.00	501+20.00	Fill
MUP Ph 2	504+45.00	507+75.00	2' Grading
MUP Ph 2	507+75.00	509+95.00	No
MUP Ph 2	509+95.00	510+85.00	2' Grading
MUP Ph 2	510+85.00	511+97.00	Fill
MUP Ph 2	511+97.00	515+31.00	2' Grading
MUP Ph 2	515+31.00	516+13.00	Fill
MUP Ph 2	516+13.00	516+85.00	2' Grading
MUP Ph 2	516+85.00	518+23.00	Fill
MUP Ph 2	518+23.00	522+36.00	2' Grading
MUP Ph 2	522+36.00	523+34.00	Cut
MUP Ph 2	525+66.00	527+45.00	2' Grading
MUP Ph 2	527+45.00	530+43.00	Fill
MUP Ph 2	530+43.00	532+25.00	2' Grading
MUP Ph 2	532+25.00	535+48.00	Fill
MUP Ph 2	535+48.00	536+17.00	Cut
MUP Ph 2	536+17.00	539+04.00	Fill
MUP Ph 2	539+04.00	540+16.00	2' Grading
MUP Ph 2	540+16.00	540+63.17	Fill

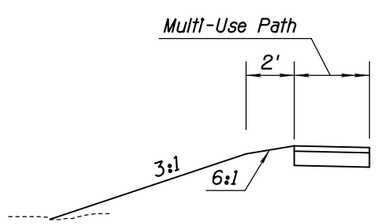

FILL CONDITION

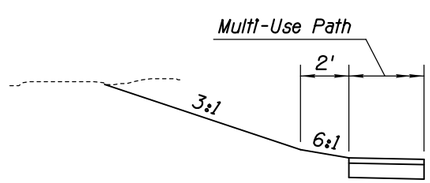

CUT CONDITION

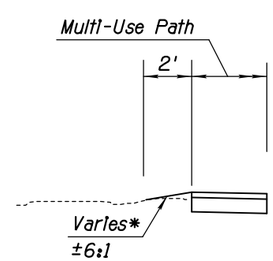

2' GRADING CONDITION

* Grade to Existing Ground for 2' from the Edge of Pavement (6:1 Max)

NOTES:

1. See Typical Sections on DWG NO. G2-2.01.
2. The Grading Tables Indicate Path Locations Containing No Safety Rail or Retaining Walls.

	NAME	DATE
DESIGN	SMG	06/14
DRAWN	CPG	06/14
CHECKED	GPF	06/14

PARSONS BRINCKERHOFF

ARIZONA DEPARTMENT OF TRANSPORTATION
INTERMODAL TRANSPORTATION DIVISION
ROADWAY DESIGN SECTION

TYPICAL SECTION

ROUTE | LOCATION PRESCOTT VALLEY PIPELINE & CENTRAL CORE MULTI-USE PATHS (PIPELINE PHASE 2)

Registered Professional Engineer (Civil) CERTIFICATE NO. 49450 GREGORY PATRICK FLY ARIZONA U.S.A.
Expires 3/31/2015

DWG NO. G2-2.02

TRACS NO. SL680 01C | TEA-PRV-0(205)T | ____ OF ____

DATE- | LOCATION- | REVISIONS- | FINISHED PLANS- | SURVEY NO.

NOTE:
THE ZEROS IN PARENTHESES (0, 0.0 & 0.000) INDICATE THE DIMENSIONAL PRECISION FOR THAT COLUMN

NOTE:
FOR PIPE CULVERT PLACEMENT SEE STANDARD DRAWINGS C-13.10 AND C-13.15

NOTE:
PIPE OPTIONS SELECTED ARE THOSE REQUIRED TO MEET MINIMUM SERVICE LIFE.
ALLOWABLE PIPE OPTIONS ARE INDICATED WITH THE LETTER 'X' IN THE SPACE. BLANK SPACES ARE NOT ALLOWABLE ALTERNATES.

CSP - CORRUGATED STEEL PIPE
CAP - CORRUGATED ALUMINUM PIPE
RCP - REINFORCED CONCRETE PIPE
NRCP - NON-REINFORCED CONCRETE PIPE
NRCIPCP - NON-REINFORCED CAST-IN-PLACE CONCRETE PIPE
CHDPEPP - CORRUGATED HIGH-DENSITY POLYETHYLENE PLASTIC PIPE

F.H.W.A. REGION	STATE	PROJECT NO.	SHEET NO.	TOTAL SHEETS	AS BUILT
9	ARIZ.	TEA-PRV-0(205)T			
		PRV 0000 YV			

DESCRIPTION							CSP				CAP				RCP		NRCP	NRCIPCP	CHDPEPP	END TREATMENT																QUANTITIES				
			In.	In.	Ft.	Degree	In.	Coating			In.							In.		Each																Cubic Yard				
																					Catch Basin, Manhole, Headwall & Junction Structure																		
																				End Section	Ea						Ft.			Grate	Ft.								
Station	Plan Reference Number	◒ Controlling Fill Height Range	Size, Corrugated	Size, Smooth	Length (0)	Skew (0)	◪ Corrugation	Wall Thickness (0.000)	Zinc	Bituminous Coated Zinc	Aluminum	Bituminous Coated Aluminum	◪ Corrugation	Wall Thickness (0.000)	Uncoated	Bituminous Coated	Class - Non-Trench	Class - Trench	Class	Minimum Wall Thickness (0)	AASHTO M-294 Type C	AASHTO M-294 Type S	C-13.20 & C-13.25 Detail	Size, (In) Manhole	Standard or Detail	S-Single / D-Double	Location	H (0.0)	L Wing (0.0)	L 18" Slotted Drain (0)	L 24" Slotted Drain (0)	Type	Elevation (0.00)	Depth In.	Depth Ft.	L (0.0)	Inlet Depression C-15.10	Pipe Excavation (0)	Pipe Backfill (0) C-13.15	Drainage Excavation (0)	Berm/Dike Embankment (0)	REMARKS
Sta 500+08	1	1	3-6		22.0															X	X																7	3			REMOVE 20.6' EXST PIPE (LT)
Sta 500+08	2	1	3-6		38.0															X	X																17	8			
Sta 502+83	3	2	18		12.0															X	X	1															4	2			
Sta 502+83	4	1	18		27.0															X	X	1															14	4			
Sheet Total																						2															42	17			

FILL HEIGHT RANGE TABLE (Ft.)													
RANGE NO.		1	2	3	4	5	6	7	8	9	10	11	12
FILL	>	1	3	5	8	11	15	20	25	30	40	55	70
HEIGHT (Ft.)	≤	3	5	8	11	15	20	25	30	40	55	70	90

◒ SHOULD FIELD CONDITIONS VARY FROM THE RANGE INDICATED, CONTACT DESIGN FOR RE-EVALUATION OF PIPE DESIGN REQUIREMENTS.

◪ PIPE CORRUGATION			
A	2⅔x½	D	6x2
B	3x1	E	3x1 or 9x2½
C	9x2½		

	NAME	DATE
DESIGN	SMG	06/14
DRAWN	CPG	06/14
CHECKED	GPF	06/14

PARSONS BRINCKERHOFF

ARIZONA DEPARTMENT OF TRANSPORTATION
INTERMODAL TRANSPORTATION DIVISION
ROADWAY DESIGN SECTION

NEW PIPE SUMMARY SHEET

ROUTE | LOCATION PRESCOTT VALLEY PIPELINE & CENTRAL CORE MULTI-USE PATHS (PIPELINE PHASE 2)

Registered Professional Engineer (Civil) CERTIFICATE NO. 49430 GREGORY PATRICK FLY ARIZONA U.S.A.
Expires 3/31/2015

DWG NO. G2-3.01

TRACS NO. SL680 01C | TEA-PRV-0(205)T | ____ OF ____

9/15/2014 T:\Prescott_MUP\SL641_ph2\Drng\SL641_ps01.dgn

F.H.W.A. REGION	STATE	PROJECT NO.	SHEET NO.	TOTAL SHEETS	AS BUILT
9	ARIZ.	TEA-PRV-0(205)T			
		PRV 0000 YV			

CSP - CORRUGATED STEEL PIPE

Station	Plan Reference Number	◕ Controlling Fill Height Range	Size	Length In Place (0.0)	Skew (0)	Remove & Salvage End Section	Remove Headwall	Left (0.0)	Right (0.0)	Left (0)	Right (0)	Corrugation	Wall Thickness (0.000)	Zinc	Aluminum	Bituminous	Reset Salvaged End Section	New	Detail	Size, (In.) Manhole	Standard or Detail	S-Single / D-Double	Location	H (0.0)	L Wing (0.0)	L 18" Slotted Drain (0)	L 24" Slotted Drain (0)	Type	Elevation (0.00)	Depth	L (0.0)	Pipe Excavation (0)	Pipe Back-fill (0) C-13.15	Drainage Excavation (0)	Berm Embankment (0)	Dike Embankment (0)	REMARKS
	DESCRIPTION			In. / Ft.	Degree	Each	Ft. Remove Existing Pipe			CSP Ft. Extend			In.								END TEAM Each End Section C-13.25			Catch Basin, Manhole, Headwall & Junction Structure		Ft.		Grate Ft.		In. / Ft.		QUANTITIES Cubic Yard				
Sta 529+65	1	1	18	25.0					2.0		48.0	A	0.064					1														8	4				
Sta 540+52	2	1	18	30.0					2.0		30.0	A	0.064					1														9	5				
Sheet Total																		2														17	9				

FILL HEIGHT RANGE TABLE (Ft.)													
RANGE NO.		1	2	3	4	5	6	7	8	9	10	11	12
FILL	>	1	3	5	8	11	15	20	25	30	40	55	70
HEIGHT (Ft.)	≤	3	5	8	11	15	20	25	30	40	55	70	90

◒ SHOULD FIELD CONDITIONS VARY FROM THE RANGE INDICATED, CONTACT DESIGN FOR RE-EVALUATION OF PIPE DESIGN REQUIREMENTS.

◪ PIPE CORRUGATION			
A	2⅔x½	D	6x2
B	3x1	E	3x1 or 9x2½
C	9x2½		

NOTE:
FOR PIPE CULVERT PLACEMENT SEE STANDARD DRAWINGS C-13.10 AND C-13.15

NOTE:
THE ZEROS IN PARENTHESES (0, 0.0 & 0.000) INDICATE THE DIMENSIONAL PRECISION FOR THAT COLUMN

	NAME	DATE
DESIGN	SMG	06/14
DRAWN	CPG	06/14
CHECKED	GPF	06/14

PARSONS BRINCKERHOFF

ARIZONA DEPARTMENT OF TRANSPORTATION
INTERMODAL TRANSPORTATION DIVISION
ROADWAY DESIGN SECTION

NEW CORRUGATED STEEL PIPE EXTENSIONS SUMMARY SHEET

ROUTE | LOCATION PRESCOTT VALLEY PIPELINE & CENTRAL CORE MULTI-USE PATHS (PIPELINE PHASE 2)

Registered Professional Engineer (Civil) CERTIFICATE NO. 49430 GREGORY PATRICK FLY ARIZONA U.S.A. Expires 3/31/2015

DWG NO. G2-3.02

TRACS NO. SL680 01C | TEA-PRV-0(205)T | ___ OF ___

DATE- LOCATION- REVISIONS- FINISHED PLANS- SURVEY NO. DATE- LOCATION- REVISIONS- FINISHED PLANS- SURVEY NO.

F.H.W.A. REGION	STATE	PROJECT NO.	SHEET NO.	TOTAL SHEETS	AS BUILT
9	ARIZ.	TEA-PRV-0(205)T			
		PRV 0000 YV			

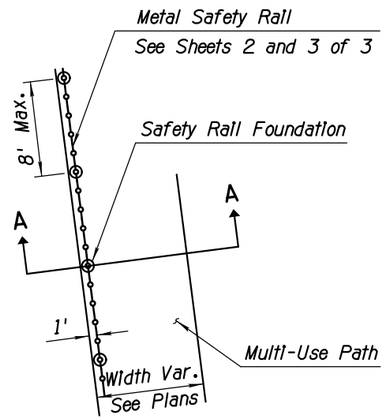

TYPICAL SAFETY RAIL LOCATION
PLAN VIEW
N.T.S.

SAFETY RAIL LOCATIONS					
Centerline	Begin Sta	End Sta	Offset	Length	Size*
MUP Ph 2	500+65.00	500+86.00	6' Rt	21 LF	56"
MUP Ph 2	501+20.00	504+45.00	6' (Var) Rt	325 LF	56"
MUP Ph 2	502+22.50	504+45.00	6' Lt	222 LF	56"
MUP Ph 2	507+75.00	509+95.00	6' Rt	220 LF	56"
MUP Ph 2	507+75.00	509+95.00	6' Lt	220 LF	56"
MUP Ph 2	523+34.00	525+66.00	6' Rt	232 LF	56"
Detail	-	-	Ramp Side	Length	Size*
H	-	-	Rt	334 LF	48"
H	-	-	Lt	346 LF	48"
I	-	-	Rt	915 LF	48"
I	-	-	Lt	943 LF	48"

* See Sheets 2 and 3 of 3

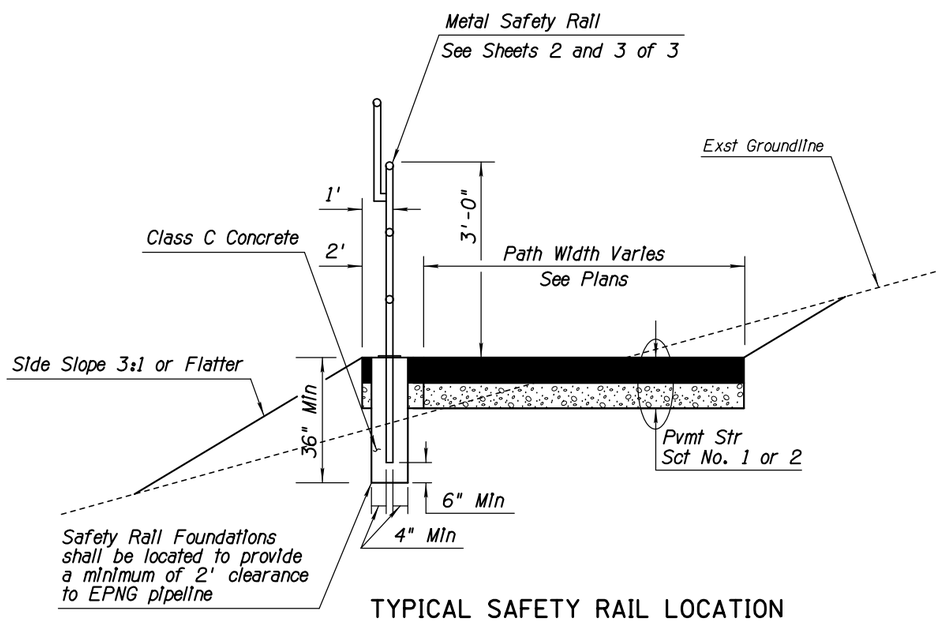

TYPICAL SAFETY RAIL LOCATION
SECTION A-A
N.T.S.

NOTES:

1. Paint Rail per ADOT Standard Specifications, Color Dunn Edwards "Hope Chest Brown" or approved equal.
2. See MAG Detail 145 for Additional Information
3. The Cost of the Safety Rail Concrete Foundation Is Included In ITEM 6110201 METAL HANDRAIL (42") and ITEM 6110202 METAL HANDRAIL (56").
4. See Sheets 2 of 3 and 3 of 3 for more Information on the Safety Rail.
5. See MAG Detail 145 Type 4 for Foundation Information

DETAIL F
SAFETY RAIL
SHEET 1 OF 3

	NAME	DATE
DESIGN	SMG	06/14
DRAWN	CPG	06/14
CHECKED	GPF	06/14

PARSONS BRINCKERHOFF

ARIZONA DEPARTMENT OF TRANSPORTATION
INTERMODAL TRANSPORTATION DIVISION
ROADWAY DESIGN SECTION

DETAIL SHEET
DETAIL F

ROUTE | LOCATION PRESCOTT VALLEY PIPELINE & CENTRAL CORE MULTI-USE PATHS (PIPELINE PHASE 2)

Registered Professional Engineer (Civil) CERTIFICATE NO. 49430 GREGORY PATRICK FLY ARIZONA U.S.A.
Expires 3/31/2015

DWG NO. G2-4.01

TRACS NO. SL680 01C | TEA-PRV-0(205)T | ____ OF ____

DATE- | LOCATION- | REVISIONS- | FINISHED PLANS- | SURVEY NO.

9/12/2014 T:\Prescott_MUP\SL641_ph2\DATA\SL641_dta.dgn

F.H.W.A. REGION	STATE	PROJECT NO.	SHEET NO.	TOTAL SHEETS	AS BUILT
9	ARIZ.	TEA-PRV-0(205)T			
		PRV 0000 YV			

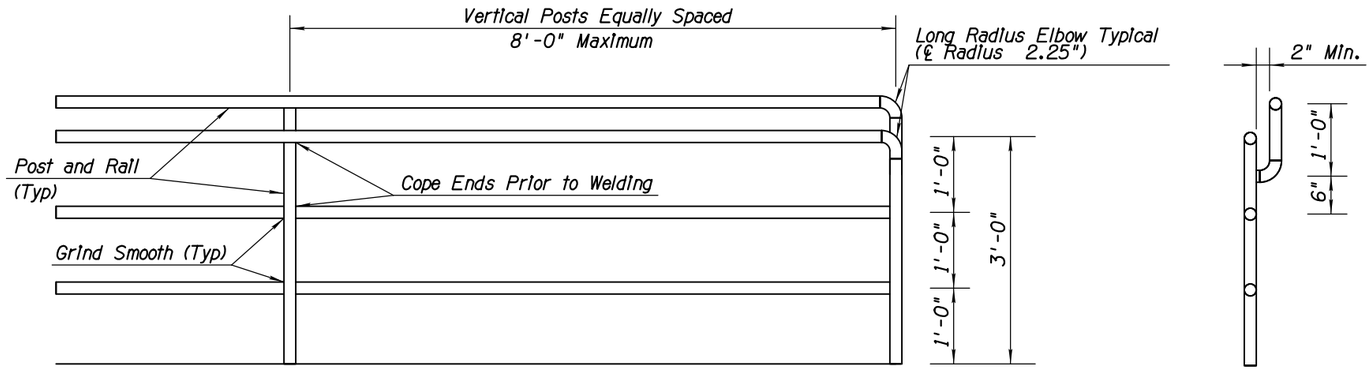

FRONT VIEW

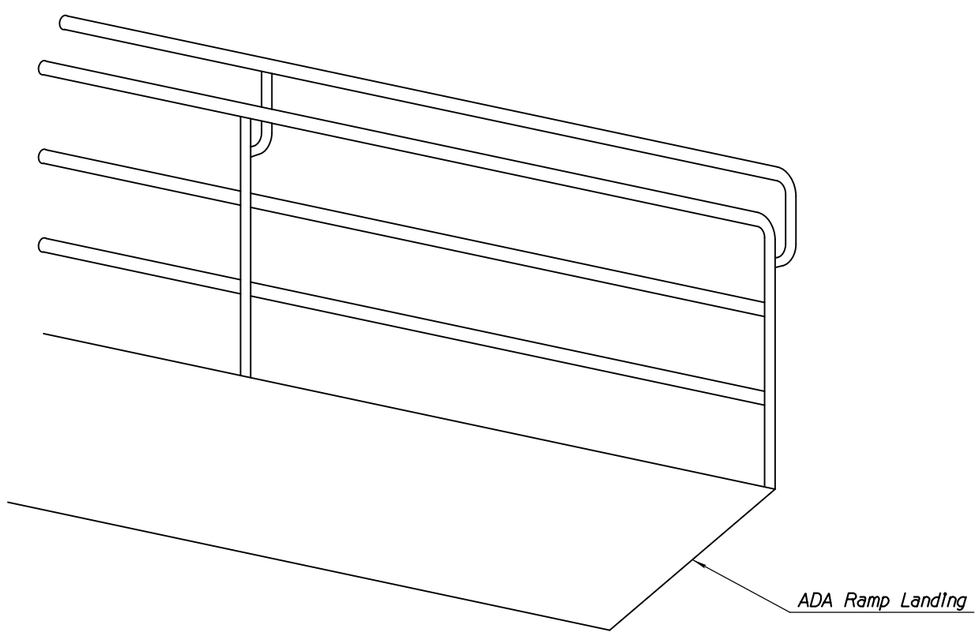

PERSPECTIVE VIEW

NOTES:

1. Posts and Rails shall be 1.5" Schedule 40 Steel Pipe ASTM A 53. Grade B (2.72 #/LF, 1.9" O.D.).
2. Paint Rail per ADOT Specifications
3. Vertical Posts to be evenly spaced.
4. Remove all sharp edges.
5. For Foundation Information use MAG Std Det 145 Type 4.
6. See MAG Standard Detail 145 for additional Information not shown.
7. Ramp handrails shall extend horizontally above the landing for 1 ft. beyond the top and bottom of ramp runs. Extensions shall return to the landing surface or shall be continuous to the handrail of an adjacent ramp run.

DETAIL F

42" SAFETY RAIL

SHEET 2 OF 3

	NAME	DATE
DESIGN	SMG	06/14
DRAWN	CPG	06/14
CHECKED	GPF	06/14

PARSONS BRINCKERHOFF

ARIZONA DEPARTMENT OF TRANSPORTATION
INTERMODAL TRANSPORTATION DIVISION
ROADWAY DESIGN SECTION

DETAIL SHEET
DETAIL F

Registered Professional Engineer (Civil) CERTIFICATE NO. 49430 GREGORY PATRICK FLY ARIZONA U.S.A. Expires 3/31/2015

ROUTE | LOCATION PRESCOTT VALLEY PIPELINE & CENTRAL CORE MULTI-USE PATHS (PIPELINE PHASE 2)

DWG NO. G2-4.02

TRACS NO. SL680 01C | TEA-PRV-0(205)T | ___ OF ___

DATE- | LOCATION- | REVISIONS- | FINISHED PLANS- | SURVEY NO.

F.H.W.A. REGION	STATE	PROJECT NO.	SHEET NO.	TOTAL SHEETS	AS BUILT
9	ARIZ.	TEA-PRV-0(205)T			
		PRV 0000 YV			

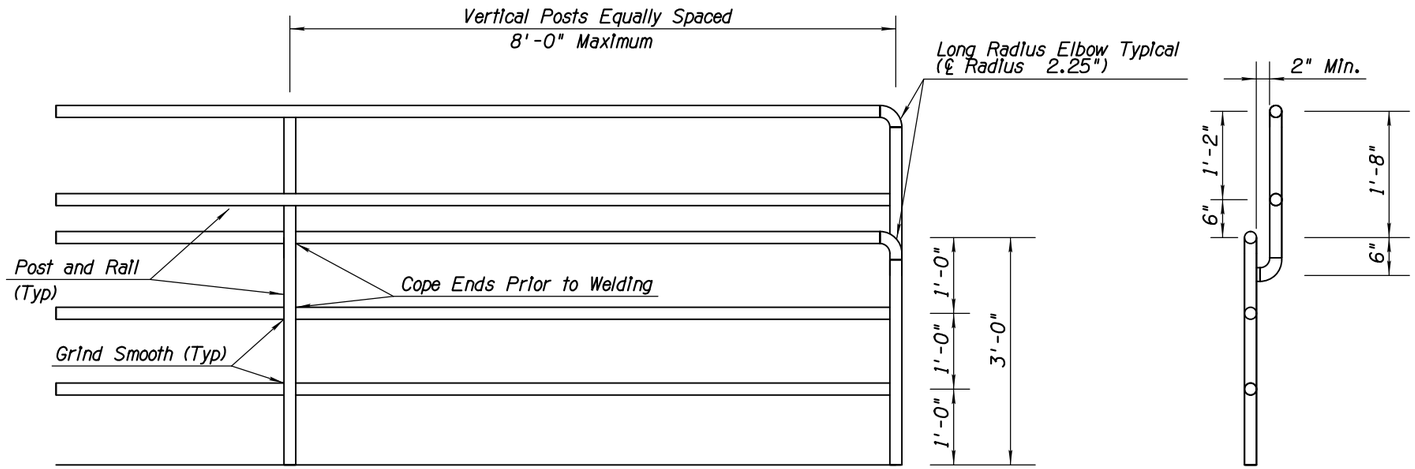

FRONT VIEW

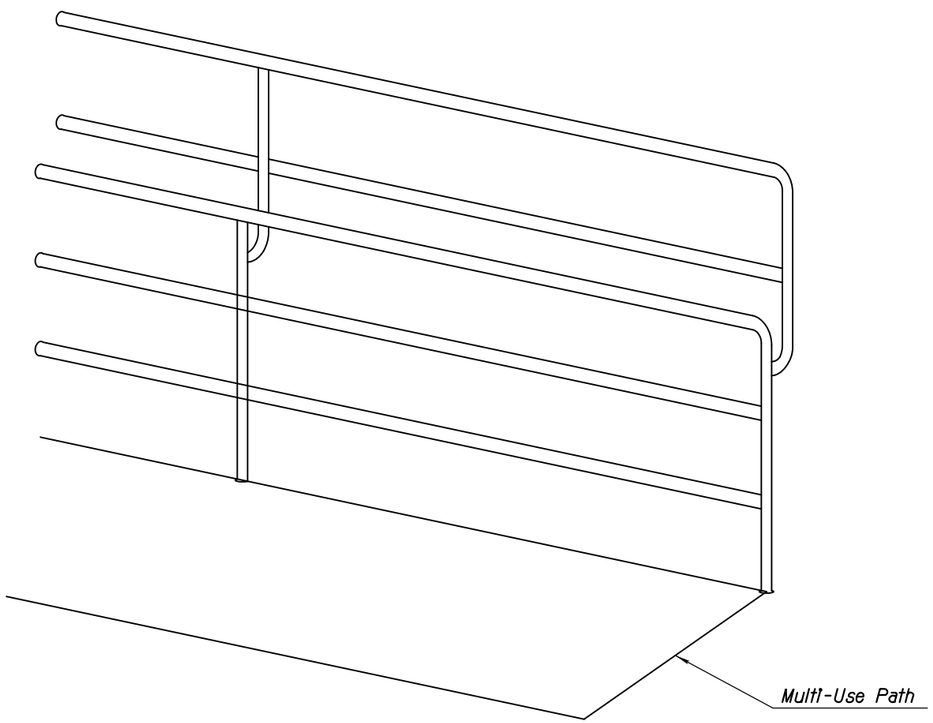

PERSPECTIVE VIEW

NOTES:

1. Posts and Rails shall be 1.5" Schedule 40 hot-Dipped Galvanized Steel Pipe ASTM A 53. Grade B (2.72 #/LF, 1.9" O.D.). Galvanizing shall be in Accordance with Section 771.
2. Paint Rail per MAG Specifications Section 530 when required by Plans. Show prime with Rust Inhibiting Primer (Field Repair primer as needed). Color per Plans.
3. Vertical Posts to be evenly spaced.
4. Remove all sharp edges.
5. Install Safety Rail as required by Plans or Specifications.
6. Safety Rail is not to be used as a Pedestrian Bridge Rail.
7. For anchor Connection use MAG Std Det 145 Type 4.
8. See MAG Standard Detail 145 for additional information not shown.

DETAIL F

56" SAFETY RAIL

SHEET 3 OF 3

	NAME	DATE
DESIGN	SMG	06/14
DRAWN	CPG	06/14
CHECKED	GPF	06/14

PARSONS BRINCKERHOFF

ARIZONA DEPARTMENT OF TRANSPORTATION
INTERMODAL TRANSPORTATION DIVISION
ROADWAY DESIGN SECTION

DETAIL SHEET
DETAIL F

ROUTE | LOCATION PRESCOTT VALLEY PIPELINE & CENTRAL CORE MULTI-USE PATHS (PIPELINE PHASE 1)

Registered Professional Engineer (Civil) CERTIFICATE NO. 49450 GREGORY PATRICK FLY ARIZONA U.S.A.
Expires 3/31/2015

DWG NO. G2-4.03

TRACS NO. SL680 01C | TEA-PRV-0(205)T | ____ OF ____

DATE- | LOCATION- | REVISIONS- | FINISHED PLANS- | SURVEY NO.

F.H.W.A. REGION	STATE	PROJECT NO.	SHEET NO.	TOTAL SHEETS	AS BUILT
9	ARIZ.	TEA-PRV-0(205)T			
		PRV 0000 YV			

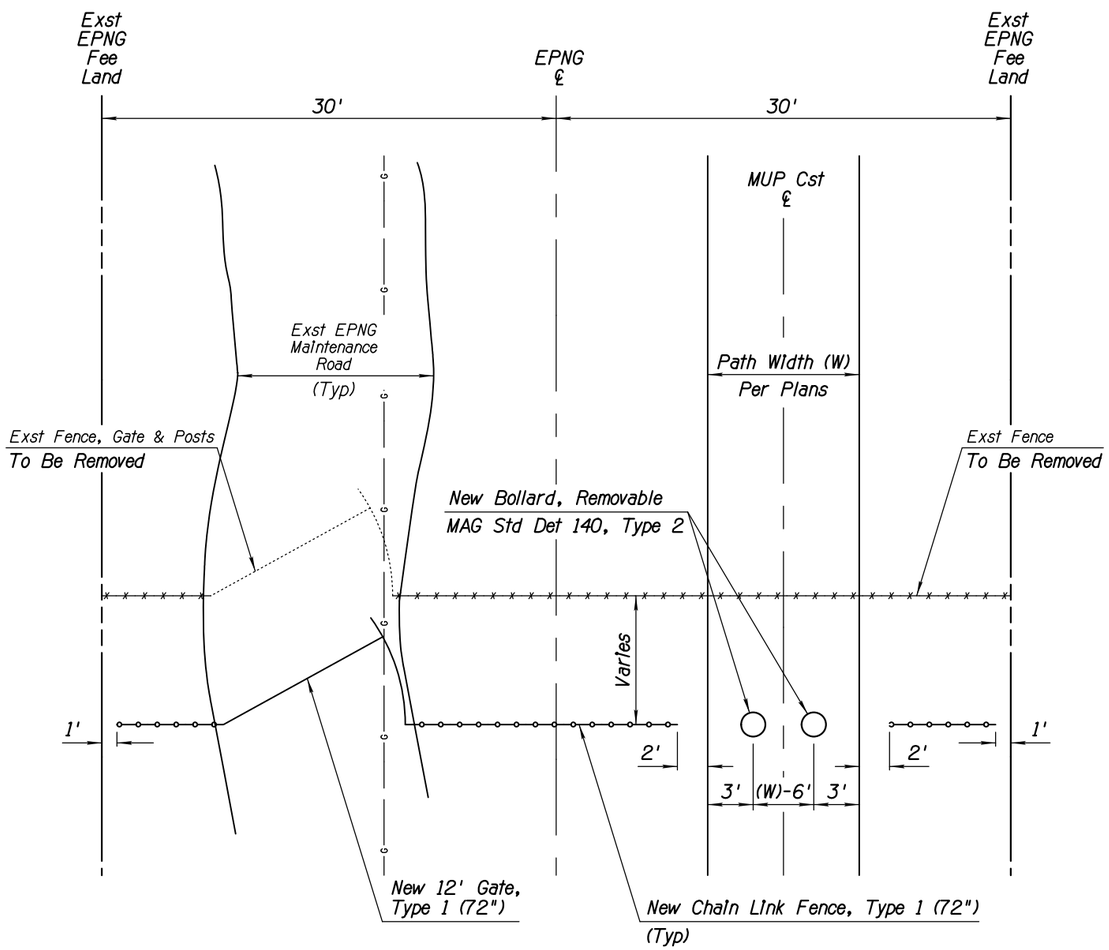

TYPICAL FENCE/GATE REMOVAL LOCATION
PLAN VIEW
N.T.S.

NOTES:

1. EPNG Gas Line Accessed Along Multi-Use Path Through Removable Bollards or Through New Chain Link Fence Gate.

FENCE/GATE INSTALLATION LOCATIONS							
Centerline	Exst Fence Sta	Remove Fence	Remove Gate	New Fence Sta	New Fence	New 12' Gate	New Bollard
MUP Ph 2	500+40	47 LF	1 EA	500+30	6 LF	1 EA	2 EA
MUP Ph 2	508+85	49 LF	1 EA	-	-	-	-
MUP Ph 2	518+82	44 LF	1 EA	518+75	32 LF	1 EA	2 EA
MUP Ph 2	533+34	45 LF	1 EA	532+70	32 LF	1 EA	2 EA
MUP Ph 2	540+45	26 LF	-	540+30	32 LF	1 EA	2 EA

DETAIL G

KMEL PASO FENCE TREATMENT

	NAME	DATE
DESIGN	SMG	06/14
DRAWN	CPG	06/14
CHECKED	GPF	06/14

ARIZONA DEPARTMENT OF TRANSPORTATION
INTERMODAL TRANSPORTATION DIVISION
ROADWAY DESIGN SECTION

PARSONS BRINCKERHOFF

DETAIL SHEET
DETAIL G

ROUTE | LOCATION PRESCOTT VALLEY PIPELINE & CENTRAL CORE MULTI-USE PATHS (PIPELINE PHASE 2)

Registered Professional Engineer (Civil) CERTIFICATE NO. 49430 GREGORY PATRICK FLY ARIZONA U.S.A.
Expires 3/31/2015

DWG NO. G2-4.04

TRACS NO. SL680 01C | TEA-PRV-0(205)T | ____ OF ____

SURVEY NO. | FINISHED PLANS- | REVISIONS- | LOCATION- | DATE-

F.H.W.A. REGION	STATE	PROJECT NO.	SHEET NO.	TOTAL SHEETS	AS BUILT
9	ARIZ.	TEA-PRV-0(205)T			
		PRV 0000 YV			

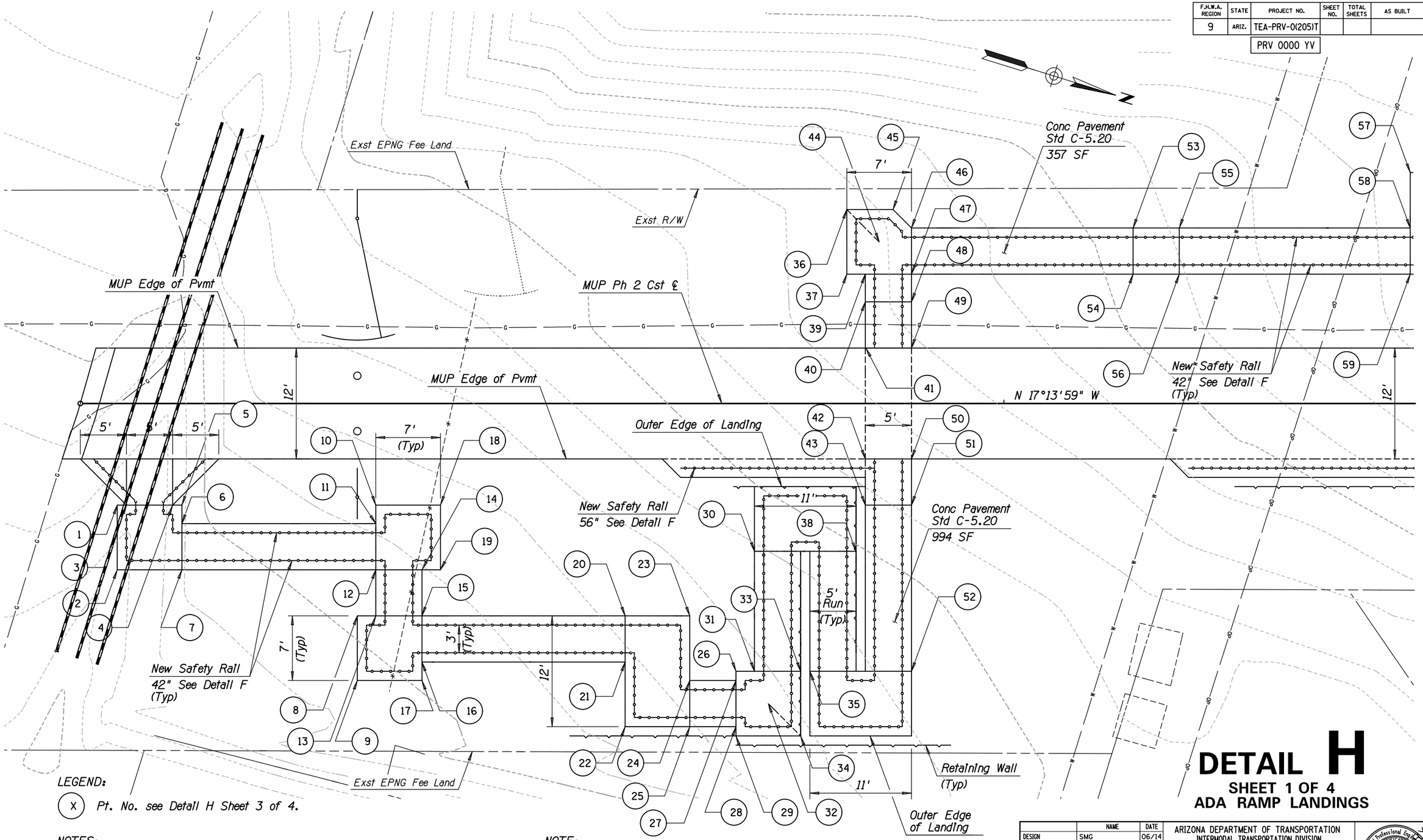

DETAIL H

SHEET 1 OF 4
ADA RAMP LANDINGS

LEGEND:

(X) Pt. No. see Detail H Sheet 3 of 4.

NOTES:

1. See Detail K for Additional Ramp Landing Information.
2. See Detail H Sheet 3 of 4 for Landing Horizontal Control Information.
3. See Detail H Sheet 4 of 4 for Retaining Wall Information.

NOTE:

Caution, EPNG high pressure natural gas line present. EPNG Supervisor should be contacted at 928-527-6535 a minimum of 72 hours prior to any construction activities inside EPNG property.

	NAME	DATE
DESIGN	SMG	06/14
DRAWN	CPG	06/14
CHECKED	GPF	06/14

PARSONS BRINCKERHOFF

ARIZONA DEPARTMENT OF TRANSPORTATION
INTERMODAL TRANSPORTATION DIVISION
ROADWAY DESIGN SECTION

DETAIL SHEET
DETAIL H

ROUTE | LOCATION: PRESCOTT VALLEY PIPELINE & CENTRAL CORE MULTI-USE PATHS (PIPELINE PHASE 2)

Registered Professional Engineer (Civil) CERTIFICATE NO. 49430 GREGORY PATRICK FLY ARIZONA U.S.A. Expires 3/31/2015

DWG NO. G2-4.05

TRACS NO. SL680 01C | TEA-PRV-0(205)T | ___ OF ___

DATE- LOCATION- REVISIONS- FINISHED PLANS- SURVEY NO.

9/12/2014 I:\Prescott_MUP\SL641_ph2\DATA\SL641_dtc01.dgn

F.H.W.A. REGION	STATE	PROJECT NO.	SHEET NO.	TOTAL SHEETS	AS BUILT
9	ARIZ.	TEA-PRV-0(205)T			
		PRV 0000 YV			

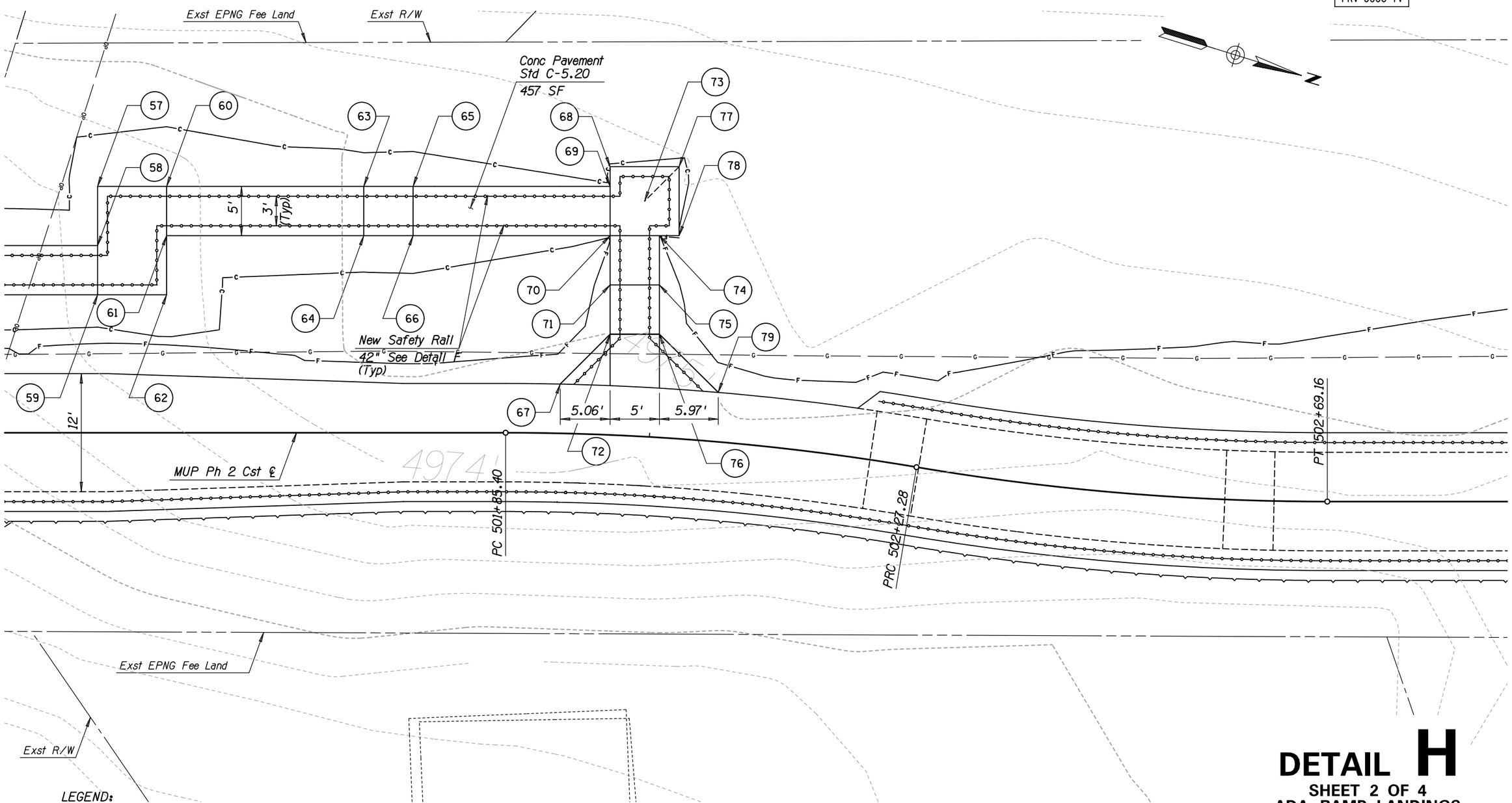

DETAIL H

SHEET 2 OF 4
ADA RAMP LANDINGS

LEGEND:

(X) Pt. No. see Detail H Sheet 3 of 4.

NOTES:

1. See Detail H Sheet 3 of 4 for Landing Horizontal Control Information.

NOTE:
Caution, EPNG high pressure natural gas line present. EPNG Supervisor should be contacted at 928-527-6535 a minimum of 72 hours prior to any construction activities inside EPNG property.

	NAME	DATE
DESIGN	SMG	06/14
DRAWN	CPG	06/14
CHECKED	GPF	06/14

PARSONS BRINCKERHOFF

ARIZONA DEPARTMENT OF TRANSPORTATION
INTERMODAL TRANSPORTATION DIVISION
ROADWAY DESIGN SECTION

DETAIL SHEET
DETAIL H

ROUTE | LOCATION: PRESCOTT VALLEY PIPELINE & CENTRAL CORE MULTI-USE PATHS (PIPELINE PHASE 2)

Registered Professional Engineer (Civil) CERTIFICATE NO. 49450 GREGORY PATRICK FLY ARIZONA U.S.A. Expires 3/31/2015

DWG NO. G2-4.06

TRACS NO. SL680 01C | TEA-PRV-0(205)T | ___ OF ___

DATE- LOCATION- REVISIONS- FINISHED PLANS- SURVEY NO.

9/12/2014 I:\Prescott_MUP\SL641_ph2\DATA\SL641_dtc02.dgn

F.H.W.A. REGION	STATE	PROJECT NO.	SHEET NO.	TOTAL SHEETS	AS BUILT
9	ARIZ.	TEA-PRV-0(205)T			

PRV 0000 YV

HORIZONTAL CONTROL				
Point No.	Reference Roadway Cst ℄	Station	Offset	Elevation
1	MUP Ph 2 Cst ℄	500+04.00	11' Rt	4959.77
2	MUP Ph 2 Cst ℄	500+04.00	18' Rt	4959.77
3	MUP Ph 2 Cst ℄	500+05.00	11' Rt	4959.77
4	MUP Ph 2 Cst ℄	500+10.00	11' Rt	4959.78
5	MUP Ph 2 Cst ℄	500+11.00	11' Rt	4959.78
6	MUP Ph 2 Cst ℄	500+11.00	13' Rt	4959.78
7	MUP Ph 2 Cst ℄	500+11.00	18' Rt	4959.78
8	MUP Ph 2 Cst ℄	500+30.00	23' Rt	4961.32
9	MUP Ph 2 Cst ℄	500+30.00	30' Rt	4961.32
10	MUP Ph 2 Cst ℄	500+32.00	11' Rt	4961.52
11	MUP Ph 2 Cst ℄	500+32.00	13' Rt	4961.52
12	MUP Ph 2 Cst ℄	500+32.00	18' Rt	4961.52
13	MUP Ph 2 Cst ℄	500+32.00	23' Rt	4961.32
14	MUP Ph 2 Cst ℄	500+37.00	18' Rt	4961.53
15	MUP Ph 2 Cst ℄	500+37.00	23' Rt	4961.33
16	MUP Ph 2 Cst ℄	500+37.00	28' Rt	4961.33
17	MUP Ph 2 Cst ℄	500+37.00	30' Rt	4961.33
18	MUP Ph 2 Cst ℄	500+39.00	11' Rt	4961.53
19	MUP Ph 2 Cst ℄	500+39.00	18' Rt	4961.53
20	MUP Ph 2 Cst ℄	500+59.00	23' Rt	4963.16
21	MUP Ph 2 Cst ℄	500+59.00	28' Rt	4963.16
22	MUP Ph 2 Cst ℄	500+59.00	35' Rt	4963.16
23	MUP Ph 2 Cst ℄	500+66.00	23' Rt	4963.3
24	MUP Ph 2 Cst ℄	500+66.00	30' Rt	4963.3
25	MUP Ph 2 Cst ℄	500+66.00	35' Rt	4963.3
26	MUP Ph 2 Cst ℄	500+71.00	29' Rt	4963.71
27	MUP Ph 2 Cst ℄	500+71.00	30' Rt	4963.71
28	MUP Ph 2 Cst ℄	500+71.00	35' Rt	4963.71
29	MUP Ph 2 Cst ℄	500+71.00	36' Rt	4963.71
30	MUP Ph 2 Cst ℄	500+73.00	16' Rt	4964.79
31	MUP Ph 2 Cst ℄	500+73.00	29' Rt	4963.71
32	MUP Ph 2 Cst ℄	500+74.50	32.5' Rt	4963.72
33	MUP Ph 2 Cst ℄	500+78.00	29' Rt	4963.71
34	MUP Ph 2 Cst ℄	500+78.00	36' Rt	4963.72
35	MUP Ph 2 Cst ℄	500+79.00	29' Rt	4964.79
36	MUP Ph 2 Cst ℄	500+83.00	21' Lt	4967.92
37	MUP Ph 2 Cst ℄	500+83.00	14' Lt	4967.94
38	MUP Ph 2 Cst ℄	500+84.00	16' Rt	4964.79
39	MUP Ph 2 Cst ℄	500+85.00	14' Lt	4967.94
40	MUP Ph 2 Cst ℄	500+85.00	11' Lt	4967.69

HORIZONTAL CONTROL				
Point No.	Reference Roadway Cst ℄	Station	Offset	Elevation
41	MUP Ph 2 Cst ℄	500+85.00	6' Lt	4967.59
42	MUP Ph 2 Cst ℄	500+85.00	6' Rt	4967.47
43	MUP Ph 2 Cst ℄	500+85.00	11' Rt	4967.37
44	MUP Ph 2 Cst ℄	500+86.50	18' Lt	4967.93
45	MUP Ph 2 Cst ℄	500+88.00	21' Lt	4967.94
46	MUP Ph 2 Cst ℄	500+90.00	19' Lt	4967.94
47	MUP Ph 2 Cst ℄	500+90.00	14' Lt	4967.94
48	MUP Ph 2 Cst ℄	500+90.00	11' Lt	4967.69
49	MUP Ph 2 Cst ℄	500+90.00	6' Lt	4967.59
50	MUP Ph 2 Cst ℄	500+90.00	6' Rt	4967.47
51	MUP Ph 2 Cst ℄	500+90.00	11' Rt	4967.37
52	MUP Ph 2 Cst ℄	500+90.00	29' Rt	4965.87
53	MUP Ph 2 Cst ℄	501+14.00	19' Lt	4969.94
54	MUP Ph 2 Cst ℄	501+14.00	14' Lt	4969.94
55	MUP Ph 2 Cst ℄	501+19.00	19' Lt	4970.04
56	MUP Ph 2 Cst ℄	501+19.00	14' Lt	4970.04
57	MUP Ph 2 Cst ℄	501+44.00	25' Lt	4972.12
58	MUP Ph 2 Cst ℄	501+44.00	19' Lt	4972.12
59	MUP Ph 2 Cst ℄	501+44.00	14' Lt	4972.12
60	MUP Ph 2 Cst ℄	501+51.00	25' Lt	4972.26
61	MUP Ph 2 Cst ℄	501+51.00	20' Lt	4972.26
62	MUP Ph 2 Cst ℄	501+51.00	14' Lt	4972.26
63	MUP Ph 2 Cst ℄	501+71.00	25' Lt	4973.92
64	MUP Ph 2 Cst ℄	501+71.00	20' Lt	4973.92
65	MUP Ph 2 Cst ℄	501+76.00	25' Lt	4974.02
66	MUP Ph 2 Cst ℄	501+76.00	20' Lt	4974.02
67	MUP Ph 2 Cst ℄	501+95.59	10.22' Lt	4975.61
68	MUP Ph 2 Cst ℄	501+94.96	27.20' Lt	4975.68
69	MUP Ph 2 Cst ℄	501+95.03	25.20' Lt	4975.68
70	MUP Ph 2 Cst ℄	501+95.21	20.21' Lt	4975.68
71	MUP Ph 2 Cst ℄	501+95.39	15.21' Lt	4975.93
72	MUP Ph 2 Cst ℄	501+95.59	10.22' Lt	4975.94
73	MUP Ph 2 Cst ℄	501+98.28	23.86' Lt	4975.69
74	MUP Ph 2 Cst ℄	501+99.83	20.45' Lt	4975.68
75	MUP Ph 2 Cst ℄	502+00.10	15.46' Lt	4975.93
76	MUP Ph 2 Cst ℄	502+00.38	10.47' Lt	4975.94
77	MUP Ph 2 Cst ℄	502+01.26	27.56' Lt	4975.69
78	MUP Ph 2 Cst ℄	502+01.67	20.57' Lt	4975.69
79	MUP Ph 2 Cst ℄	502+06.57	5' Lt	4975.83

DETAIL H

SHEET 3 OF 4
ADA RAMP LANDINGS

	NAME	DATE
DESIGN	SMG	06/14
DRAWN	CPG	06/14
CHECKED	GPF	06/14

PARSONS BRINCKERHOFF

ARIZONA DEPARTMENT OF TRANSPORTATION
INTERMODAL TRANSPORTATION DIVISION
ROADWAY DESIGN SECTION

DETAIL SHEET
DETAIL H

ROUTE | LOCATION PRESCOTT VALLEY PIPELINE & CENTRAL CORE MULTI-USE PATHS (PIPELINE PHASE 2)

Registered Professional Engineer (Civil) CERTIFICATE NO. 49430 GREGORY PATRICK FLY ARIZONA U.S.A.
Expires 3/31/2015

DWG NO. G2-4.07

TRACS NO. SL680 01C | TEA-PRV-0(205)T | ____ OF ____

DATE- LOCATION- REVISIONS- FINISHED PLANS- SURVEY NO.

F.H.W.A. REGION	STATE	PROJECT NO.	SHEET NO.	TOTAL SHEETS	AS BUILT
9	ARIZ.	TEA-PRV-0(205)T			
		PRV 0000 YV			

HORIZONTAL RETAINING WALL CONTROL

Wall	Point No.	Reference Roadway Cst ℄	Station	Offset	TOW Elevation
H2	H2-1	MUP Ph 2 Cst ℄	500+53.00	36' Rt	4962.53
	H2-2	MUP Ph 2 Cst ℄	500+71.00	36' Rt	4963.87
H3	H3-1	MUP Ph 2 Cst ℄	500+71.00	37' Rt	4963.87
	H3-2	MUP Ph 2 Cst ℄	500+94.25	37' Rt	4965.88
H4	H4-1	MUP Ph 2 Cst ℄	500+78.00	18' Rt	4965.21
	H4-2	MUP Ph 2 Cst ℄	500+78.00	36' Rt	4965.88
H5	H5-1	MUP Ph 2 Cst ℄	500+84.00	9' Rt	4967.44
	H5-2	MUP Ph 2 Cst ℄	500+84.00	27' Rt	4966.44

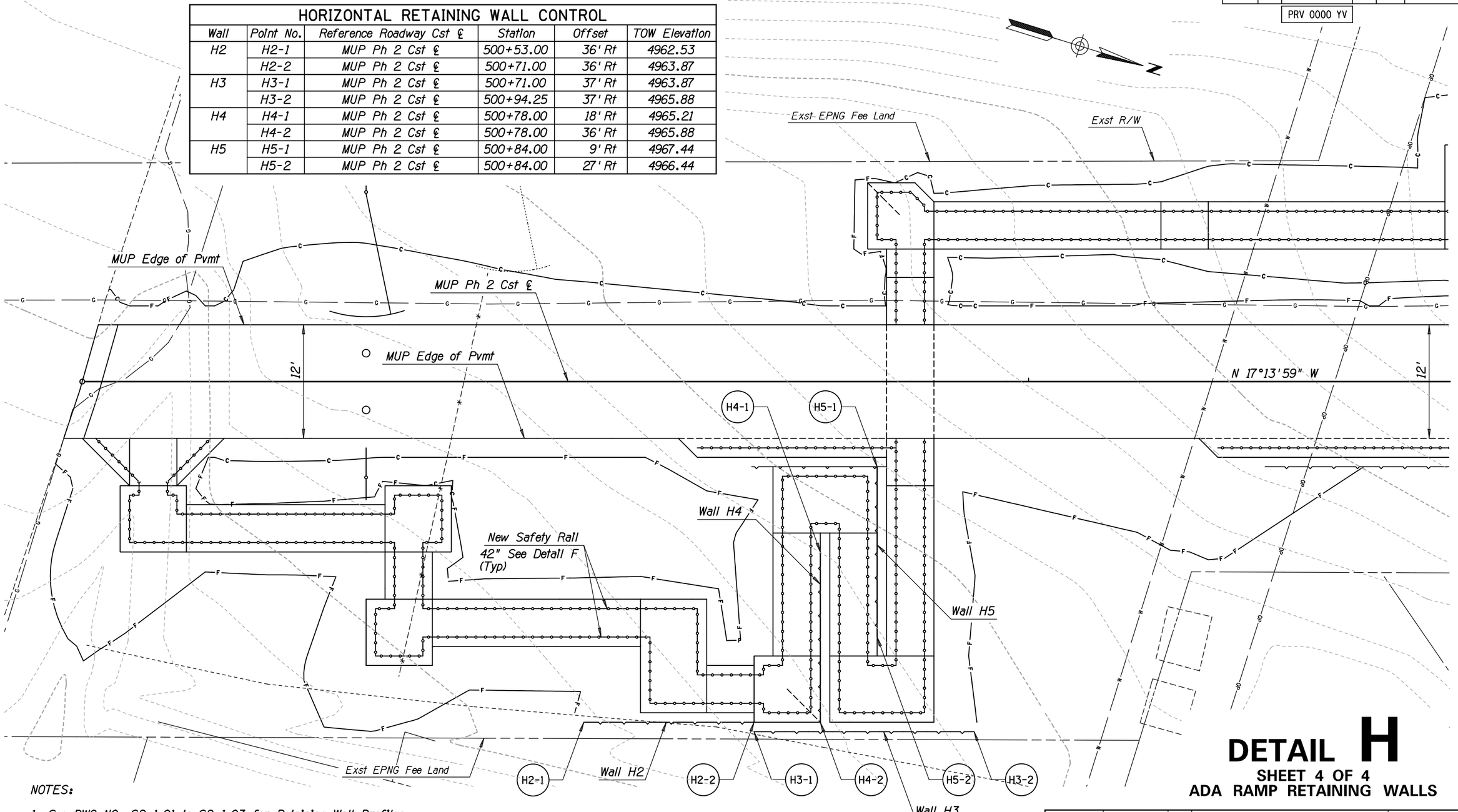

DETAIL H

SHEET 4 OF 4
ADA RAMP RETAINING WALLS

NOTES:

1. See DWG NO. S2-1.01 to S2-1.03 for Retaining Wall Profiles.
2. See Detail X for Additional Retaining Wall Information.

LEGEND:

(X) Pt. No. See Table Horizontal Retaining Wall Control Table

NOTE:

Caution, EPNG high pressure natural gas line present. EPNG Supervisor should be contacted at 928-527-6535 a minimum of 72 hours prior to any construction activities inside EPNG property.

	NAME	DATE
DESIGN	SMG	06/14
DRAWN	CPG	06/14
CHECKED	GPF	06/14

PARSONS BRINCKERHOFF

ARIZONA DEPARTMENT OF TRANSPORTATION
INTERMODAL TRANSPORTATION DIVISION
ROADWAY DESIGN SECTION

DETAIL SHEET
DETAIL H

ROUTE | LOCATION: PRESCOTT VALLEY PIPELINE & CENTRAL CORE MULTI-USE PATHS (PIPELINE PHASE 2)

Registered Professional Engineer (Civil) CERTIFICATE NO. 49450 GREGORY PATRICK FLY ARIZONA U.S.A.
Expires 3/31/2015

DWG NO. G2-4.08

TRACS NO. SL680 01C | TEA-PRV-0(205)T | ____ OF ____

DATE- LOCATION- REVISIONS- FINISHED PLANS- SURVEY NO.

9/12/2014 T:\Prescott_MUP\SL641_ph2\DATA\SL641_dtc03.dgn

F.H.W.A. REGION	STATE	PROJECT NO.	SHEET NO.	TOTAL SHEETS	AS BUILT
9	ARIZ.	TEA-PRV-0(205)T			
		PRV 0000 YV			

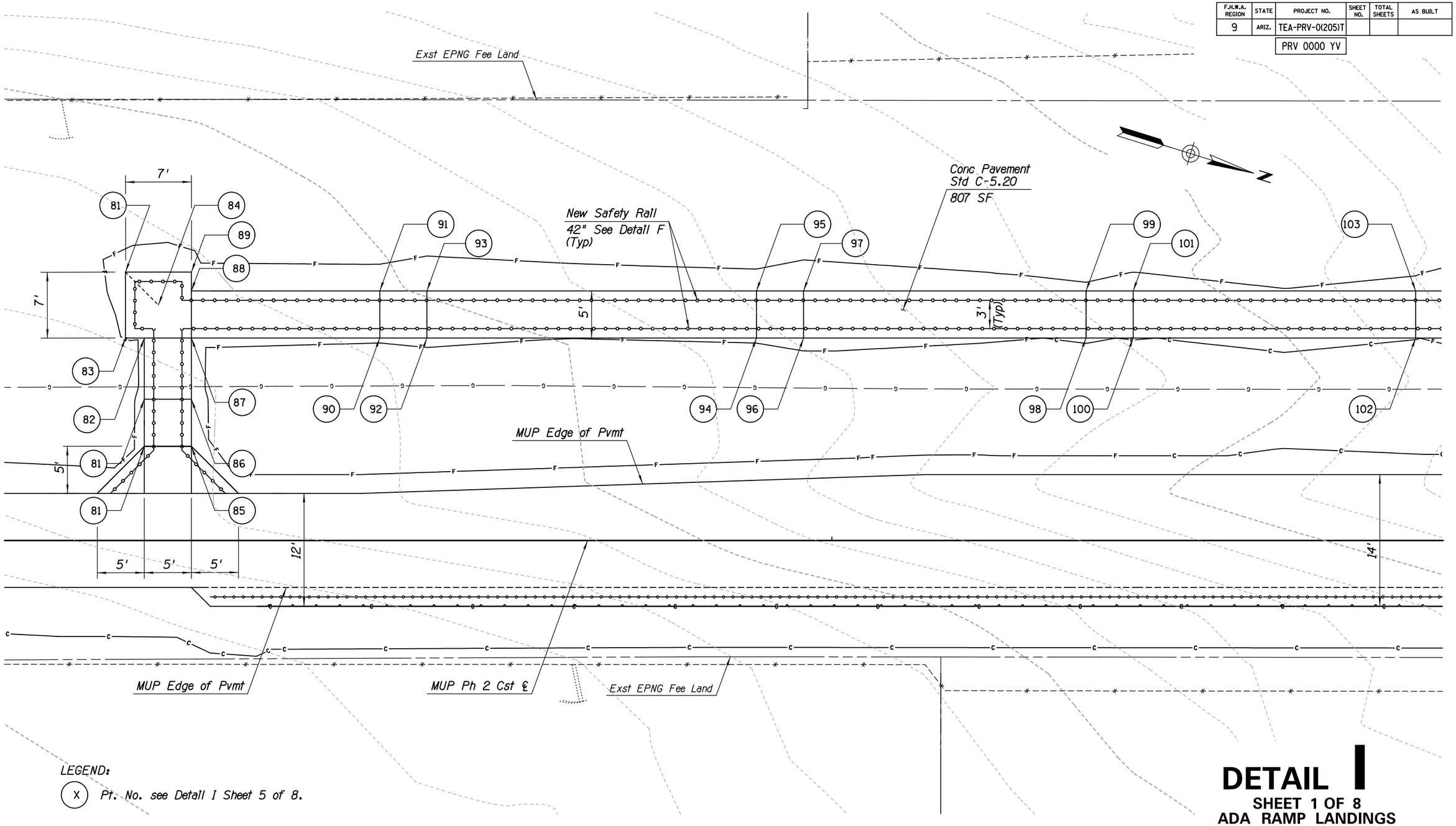

LEGEND:

(X) Pt. No. see Detail I Sheet 5 of 8.

NOTES:

1. See Detail K for Additional Ramp Landing Information.
2. See Detail I Sheet 5 of 8 for Landing Horizontal Control Information.

NOTE:
Caution, EPNG high pressure natural gas line present. EPNG Supervisor should be contacted at 928-527-6535 a minimum of 72 hours prior to any construction activities inside EPNG property.

DETAIL I

SHEET 1 OF 8
ADA RAMP LANDINGS

	NAME	DATE
DESIGN	SMG	06/14
DRAWN	CPG	06/14
CHECKED	GPF	06/14

PARSONS BRINCKERHOFF

ARIZONA DEPARTMENT OF TRANSPORTATION
INTERMODAL TRANSPORTATION DIVISION
ROADWAY DESIGN SECTION

DETAIL SHEET
DETAIL I

Registered Professional Engineer (Civil) CERTIFICATE NO. 49430 GREGORY PATRICK FLY ARIZONA U.S.A. Expires 3/31/2015

ROUTE | LOCATION: PRESCOTT VALLEY PIPELINE & CENTRAL CORE MULTI-USE PATHS (PIPELINE PHASE 2)

DWG NO. G2-4.09

TRACS NO. SL680 01C | TEA-PRV-0(205)T | ___ OF ___

DATE- LOCATION- REVISIONS- FINISHED PLANS- SURVEY NO.

9/12/2014 I:\Prescott_MUP\SL641_ph2\DATA\SL641_dtd01.dgn

F.H.W.A. REGION	STATE	PROJECT NO.	SHEET NO.	TOTAL SHEETS	AS BUILT
9	ARIZ.	TEA-PRV-0(205)T			
		PRV 0000 YV			

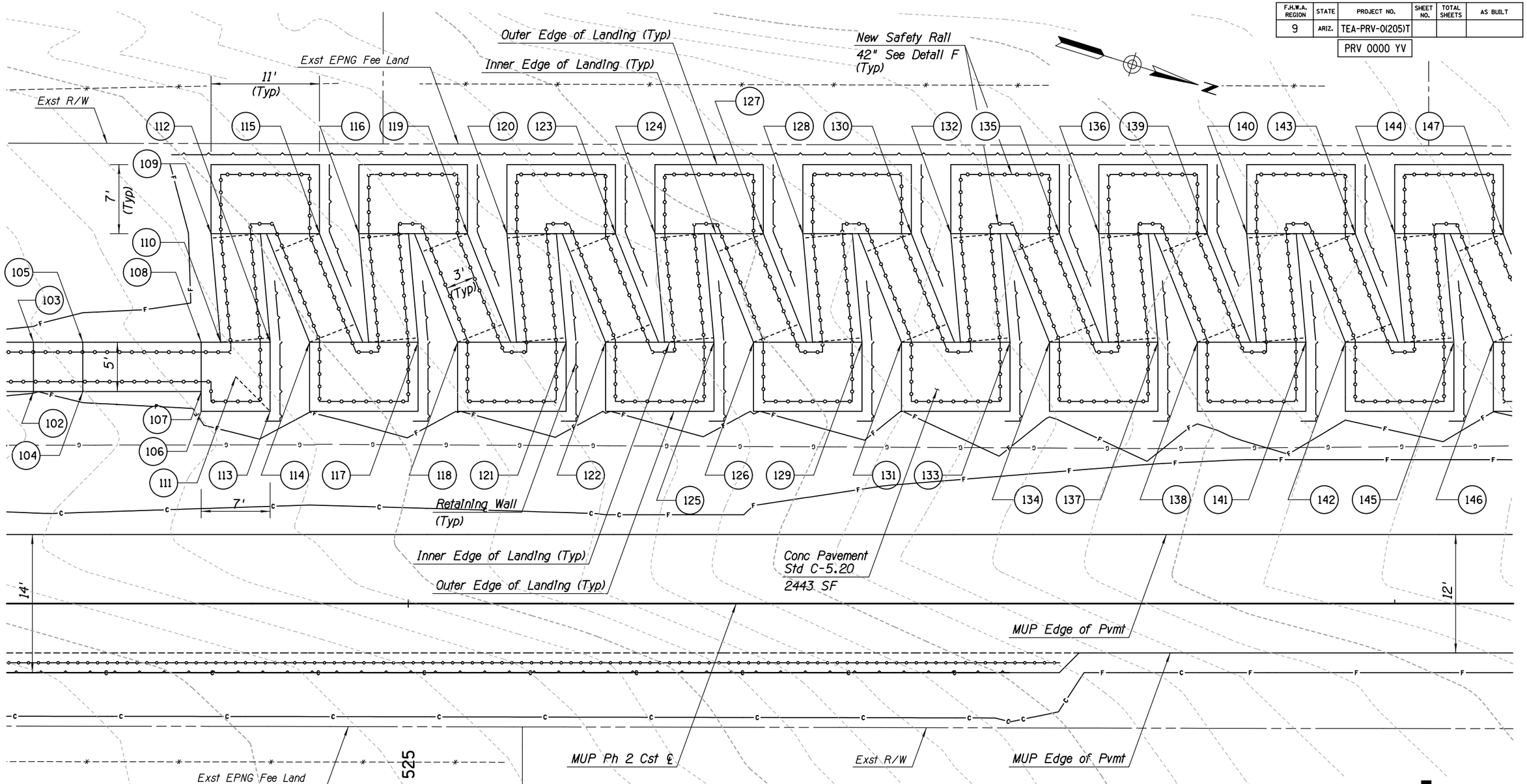

LEGEND:

(X) Pt. No. see Detail I Sheet 5 of 8.

NOTES:

1. See Detail K for Additional Ramp Landing Information.
2. See Detail I Sheet 5 of 8 for Landing Horizontal Control Information.
3. See Detail I Sheet 6 of 8 for Retaining Wall Information.

DETAIL I

SHEET 2 OF 8
ADA RAMP LANDINGS

	NAME	DATE
DESIGN	SMG	06/14
DRAWN	CPG	06/14
CHECKED	GPF	06/14

PARSONS BRINCKERHOFF

ARIZONA DEPARTMENT OF TRANSPORTATION
INTERMODAL TRANSPORTATION DIVISION
ROADWAY DESIGN SECTION

DETAIL SHEET
DETAIL I

ROUTE | LOCATION: PRESCOTT VALLEY PIPELINE & CENTRAL CORE MULTI-USE PATHS (PIPELINE PHASE 2)

Registered Professional Engineer (Civil) CERTIFICATE NO. 49430 GREGORY PATRICK FLY ARIZONA U.S.A. Expires 3/31/2015

DWG NO. G2-4.10

TRACS NO. SL680 01C | TEA-PRV-0(205)T | ___ OF ___

DATE- LOCATION- REVISIONS- FINISHED PLANS- SURVEY NO.

F.H.W.A. REGION	STATE	PROJECT NO.	SHEET NO.	TOTAL SHEETS	AS BUILT
9	ARIZ.	TEA-PRV-0(205)T			
		PRV 0000 YV			

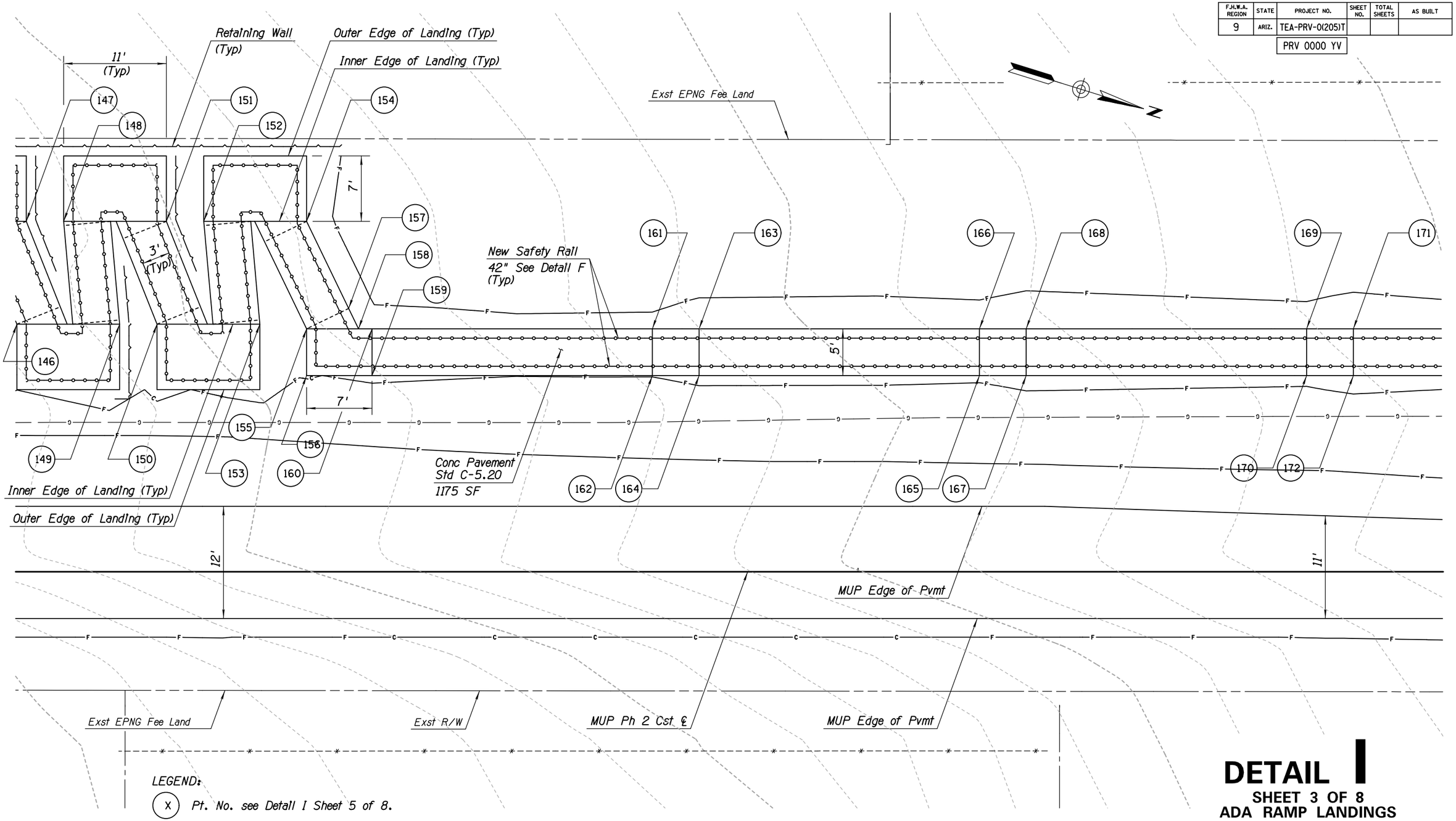

LEGEND:

(X) Pt. No. see Detail I Sheet 5 of 8.

DETAIL I

SHEET 3 OF 8
ADA RAMP LANDINGS

NOTES:

1. See Detail K for Additional Ramp Landing Information.
2. See Detail I Sheet 5 of 8 for Landing Horizontal Control Information.
3. See Detail I Sheet 7 of 8 for Retaining Wall Information.

NOTE:
Caution, EPNG high pressure natural gas line present. EPNG Supervisor should be contacted at 928-527-6535 a minimum of 72 hours prior to any construction activities inside EPNG property.

	NAME	DATE
DESIGN	SMG	06/14
DRAWN	CPG	06/14
CHECKED	GPF	06/14

PARSONS BRINCKERHOFF

ARIZONA DEPARTMENT OF TRANSPORTATION
INTERMODAL TRANSPORTATION DIVISION
ROADWAY DESIGN SECTION

DETAIL SHEET
DETAIL I

ROUTE | LOCATION: PRESCOTT VALLEY PIPELINE & CENTRAL CORE MULTI-USE PATHS (PIPELINE PHASE 2)

Registered Professional Engineer (Civil) CERTIFICATE NO. 49430 GREGORY PATRICK FLY ARIZONA U.S.A. Expires 3/31/2015

DWG NO. G2-4.11

TRACS NO. SL680 01C | TEA-PRV-0(205)T | ___ OF ___

DATE- LOCATION- REVISIONS- FINISHED PLANS- SURVEY NO.

F.H.W.A. REGION	STATE	PROJECT NO.	SHEET NO.	TOTAL SHEETS	AS BUILT
9	ARIZ.	TEA-PRV-0(205)T			
		PRV 0000 YV			

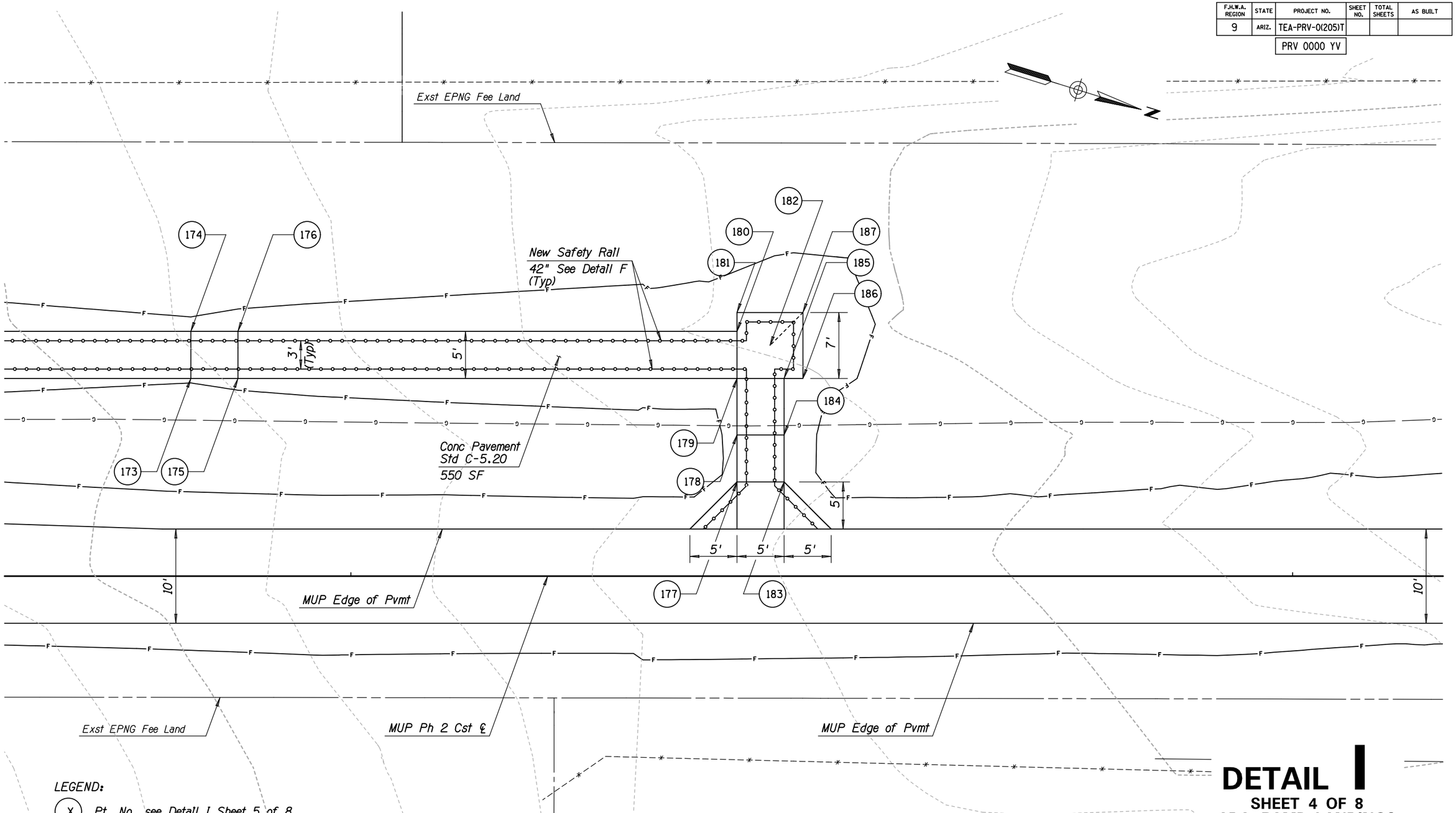

LEGEND:

(X) Pt. No. see Detail I Sheet 5 of 8.

NOTE:

1. See Detail I Sheet 5 of 8 for Landing Horizontal Control Information

NOTE:

Caution, EPNG high pressure natural gas line present. EPNG Supervisor should be contacted at 928-527-6535 a minimum of 72 hours prior to any construction activities inside EPNG property.

DETAIL I

SHEET 4 OF 8
ADA RAMP LANDINGS

	NAME	DATE
DESIGN	SMG	06/14
DRAWN	CPG	06/14
CHECKED	GPF	06/14

PARSONS BRINCKERHOFF

ARIZONA DEPARTMENT OF TRANSPORTATION
INTERMODAL TRANSPORTATION DIVISION
ROADWAY DESIGN SECTION

DETAIL SHEET
DETAIL I

ROUTE | LOCATION: PRESCOTT VALLEY PIPELINE & CENTRAL CORE MULTI-USE PATHS (PIPELINE PHASE 2)

Registered Professional Engineer (Civil) CERTIFICATE NO. 49450 GREGORY PATRICK FLY ARIZONA U.S.A. Expires 3/31/2015

DWG NO. G2-4.12

TRACS NO. SL680 01C | TEA-PRV-0(205)T | ___ OF ___

DATE- LOCATION- REVISIONS- FINISHED PLANS- SURVEY NO.

9/12/2014 T:\Prescott_MUP\SL641_ph2\DATA\SL641_dtd04.dgn

F.H.W.A. REGION	STATE	PROJECT NO.	SHEET NO.	TOTAL SHEETS	AS BUILT
9	ARIZ.	TEA-PRV-0(205)T			
		PRV 0000 YV			

DATE- LOCATION- REVISIONS- FINISHED PLANS- SURVEY NO.

HORIZONTAL CONTROL

Point No.	Reference Roadway Cst ℄	Station	Offset	Elevation
80	MUP Ph 2 Cst ℄	523+27.00	10' Lt	4977.64
81	MUP Ph 2 Cst ℄	523+27.00	15' Lt	4977.63
82	MUP Ph 2 Cst ℄	523+27.00	21.50' Lt	4977.09
83	MUP Ph 2 Cst ℄	523+25.00	21.50' Lt	4977.09
83A	MUP Ph 2 Cst ℄	523+25.00	28.50' Lt	4977.09
84	MUP Ph 2 Cst ℄	523+28.50	25' Lt	4977.09
85	MUP Ph 2 Cst ℄	523+32.00	10' Lt	4977.64
86	MUP Ph 2 Cst ℄	523+32.00	15' Lt	4977.63
87	MUP Ph 2 Cst ℄	523+32.00	21.50' Lt	4977.09
88	MUP Ph 2 Cst ℄	523+32.00	26.50' Lt	4977.09
89	MUP Ph 2 Cst ℄	523+32.00	28.50' Lt	4977.09
90	MUP Ph 2 Cst ℄	523+52.00	21.50' Lt	4976.01
91	MUP Ph 2 Cst ℄	523+52.00	26.50' Lt	4976.01
92	MUP Ph 2 Cst ℄	523+57.00	21.50' Lt	4976.00
93	MUP Ph 2 Cst ℄	523+57.00	26.50' Lt	4976.00
94	MUP Ph 2 Cst ℄	523+92.00	21.50' Lt	4973.51
95	MUP Ph 2 Cst ℄	523+92.00	26.50' Lt	4973.51
96	MUP Ph 2 Cst ℄	523+97.00	21.50' Lt	4973.5
97	MUP Ph 2 Cst ℄	523+97.00	26.50' Lt	4973.5
98	MUP Ph 2 Cst ℄	524+27.00	21.50' Lt	4971.01
99	MUP Ph 2 Cst ℄	524+27.00	26.50' Lt	4971.01
100	MUP Ph 2 Cst ℄	524+32.00	21.50' Lt	4971.00
101	MUP Ph 2 Cst ℄	524+32.00	26.50' Lt	4971.00
102	MUP Ph 2 Cst ℄	524+62.00	21.50' Lt	4968.51
103	MUP Ph 2 Cst ℄	524+62.00	26.50' Lt	4968.51
104	MUP Ph 2 Cst ℄	524+67.00	21.50' Lt	4968.5
105	MUP Ph 2 Cst ℄	524+67.00	26.50' Lt	4968.5
106	MUP Ph 2 Cst ℄	524+79.00	19.50' Lt	4967.5
107	MUP Ph 2 Cst ℄	524+79.00	21.50' Lt	4967.5
108	MUP Ph 2 Cst ℄	524+79.00	26.50' Lt	4967.5
109	MUP Ph 2 Cst ℄	524+80.00	37.50' Lt	4966.62
110	MUP Ph 2 Cst ℄	524+80.98	26.50' Lt	4967.5
111	MUP Ph 2 Cst ℄	524+82.50	23' Lt	4967.51
112	MUP Ph 2 Cst ℄	524+86.00	26.50' Lt	4967.50
113	MUP Ph 2 Cst ℄	524+86.00	19.50' Lt	4967.51
114	MUP Ph 2 Cst ℄	524+90.00	26.50' Lt	4965.80
115	MUP Ph 2 Cst ℄	524+91.00	37.50' Lt	4966.62

DATE- LOCATION- REVISIONS- FINISHED PLANS- SURVEY NO.

HORIZONTAL CONTROL

Point No.	Reference Roadway Cst ℄	Station	Offset	Elevation
116	MUP Ph 2 Cst ℄	524+95.00	37.50' Lt	4964.92
117	MUP Ph 2 Cst ℄	525+01.00	26.50' Lt	4964.92
118	MUP Ph 2 Cst ℄	525+05.00	26.50' Lt	4964.10
119	MUP Ph 2 Cst ℄	525+05.00	26.50' Lt	4964.10
120	MUP Ph 2 Cst ℄	525+10.00	37.50' Lt	4963.22
121	MUP Ph 2 Cst ℄	525+16.00	26.50' Lt	4964.10
122	MUP Ph 2 Cst ℄	525+20.00	26.50' Lt	4962.40
123	MUP Ph 2 Cst ℄	525+21.00	37.50' Lt	4963.22
124	MUP Ph 2 Cst ℄	525+25.00	37.50' Lt	4961.52
125	MUP Ph 2 Cst ℄	525+31.00	26.50' Lt	4962.40
126	MUP Ph 2 Cst ℄	525+35.00	26.50' Lt	4960.70
127	MUP Ph 2 Cst ℄	525+36.00	37.50' Lt	4961.52
128	MUP Ph 2 Cst ℄	525+40.00	37.50' Lt	4959.82
129	MUP Ph 2 Cst ℄	525+46.00	26.50' Lt	4960.70
130	MUP Ph 2 Cst ℄	525+50.00	26.50' Lt	4959.00
131	MUP Ph 2 Cst ℄	525+51.00	37.50' Lt	4959.82
132	MUP Ph 2 Cst ℄	525+55.00	37.50' Lt	4958.12
133	MUP Ph 2 Cst ℄	525+61.00	26.50' Lt	4959.00
134	MUP Ph 2 Cst ℄	525+65.00	26.50' Lt	4957.30
135	MUP Ph 2 Cst ℄	525+66.00	37.50' Lt	4958.12
136	MUP Ph 2 Cst ℄	525+70.00	37.50' Lt	4956.42
137	MUP Ph 2 Cst ℄	525+76.00	26.50' Lt	4957.30
138	MUP Ph 2 Cst ℄	525+80.00	26.50' Lt	4955.60
139	MUP Ph 2 Cst ℄	525+81.00	37.50' Lt	4956.42
140	MUP Ph 2 Cst ℄	525+85.00	37.50' Lt	4954.72
141	MUP Ph 2 Cst ℄	525+91.00	26.50' Lt	4955.60
142	MUP Ph 2 Cst ℄	525+95.00	26.50' Lt	4953.90
143	MUP Ph 2 Cst ℄	525+96.00	37.50' Lt	4954.72
144	MUP Ph 2 Cst ℄	526+00.00	37.50' Lt	4953.02
145	MUP Ph 2 Cst ℄	526+06.00	26.50' Lt	4953.90
146	MUP Ph 2 Cst ℄	526+10.00	26.50' Lt	4953.20
147	MUP Ph 2 Cst ℄	526+11.00	37.50' Lt	4953.02
148	MUP Ph 2 Cst ℄	526+15.00	37.50' Lt	4951.32
149	MUP Ph 2 Cst ℄	526+21.00	26.50' Lt	4953.20
150	MUP Ph 2 Cst ℄	526+25.00	26.50' Lt	4950.50
151	MUP Ph 2 Cst ℄	526+26.00	37.50' Lt	4951.32

DATE- LOCATION- REVISIONS- FINISHED PLANS- SURVEY NO.

HORIZONTAL CONTROL

Point No.	Reference Roadway Cst ℄	Station	Offset	Elevation
152	MUP Ph 2 Cst ℄	526+30.00	37.50' Lt	4949.62
153	MUP Ph 2 Cst ℄	526+36.00	26.50' Lt	4950.50
154	MUP Ph 2 Cst ℄	526+41.00	37.50' Lt	4949.62
155	MUP Ph 2 Cst ℄	526+41.00	26' Lt	4949.41
156	MUP Ph 2 Cst ℄	526+41.00	21' Lt	4949.41
157	MUP Ph 2 Cst ℄	526+45.50	28' Lt	4949.41
158	MUP Ph 2 Cst ℄	526+46.55	26' Lt	4949.41
159	MUP Ph 2 Cst ℄	526+48.00	21' Lt	4949.40
160	MUP Ph 2 Cst ℄	526+48.00	26' Lt	4949.40
161	MUP Ph 2 Cst ℄	526+78.00	26' Lt	4946.90
162	MUP Ph 2 Cst ℄	526+78.00	21' Lt	4946.90
163	MUP Ph 2 Cst ℄	526+83.00	26' Lt	4946.89
164	MUP Ph 2 Cst ℄	526+83.00	21' Lt	4946.89
165	MUP Ph 2 Cst ℄	527+13.00	21' Lt	4944.40
166	MUP Ph 2 Cst ℄	527+13.00	26' Lt	4944.40
167	MUP Ph 2 Cst ℄	527+18.00	21' Lt	4944.39
168	MUP Ph 2 Cst ℄	527+18.00	26' Lt	4944.39
169	MUP Ph 2 Cst ℄	527+48.00	26' Lt	4941.90
170	MUP Ph 2 Cst ℄	527+48.00	21' Lt	4941.90
171	MUP Ph 2 Cst ℄	527+53.00	26' Lt	4941.89
172	MUP Ph 2 Cst ℄	527+53.00	21' Lt	4941.89
173	MUP Ph 2 Cst ℄	527+83.00	21' Lt	4939.40
174	MUP Ph 2 Cst ℄	527+83.00	26' Lt	4939.40
175	MUP Ph 2 Cst ℄	527+88.00	21' Lt	4939.39
176	MUP Ph 2 Cst ℄	527+88.00	26' Lt	4939.39
177	MUP Ph 2 Cst ℄	528+41.00	10' Lt	4937.13
178	MUP Ph 2 Cst ℄	528+41.00	15' Lt	4937.15
179	MUP Ph 2 Cst ℄	528+41.00	21' Lt	4937.65
180	MUP Ph 2 Cst ℄	528+41.00	26' Lt	4937.65
181	MUP Ph 2 Cst ℄	528+41.00	28' Lt	4937.65
182	MUP Ph 2 Cst ℄	528+44.50	25' Lt	4937.66
183	MUP Ph 2 Cst ℄	528+46.00	10' Lt	4937.11
184	MUP Ph 2 Cst ℄	528+46.00	15' Lt	4937.15
185	MUP Ph 2 Cst ℄	528+46.00	21' Lt	4937.65
186	MUP Ph 2 Cst ℄	528+48.00	21' Lt	4937.65
187	MUP Ph 2 Cst ℄	528+48.00	28' Lt	4937.66

DETAIL I

SHEET 5 OF 8
ADA RAMP LANDINGS

	NAME	DATE
DESIGN	SMG	06/14
DRAWN	CPG	06/14
CHECKED	GPF	06/14

PARSONS BRINCKERHOFF

ARIZONA DEPARTMENT OF TRANSPORTATION
INTERMODAL TRANSPORTATION DIVISION
ROADWAY DESIGN SECTION

DETAIL SHEET
DETAIL I

Registered Professional Engineer (Civil) CERTIFICATE NO. 49430 GREGORY PATRICK FLY ARIZONA U.S.A.
Expires 3/31/2015

ROUTE | LOCATION PRESCOTT VALLEY PIPELINE & CENTRAL CORE MULTI-USE PATHS (PIPELINE PHASE 2)

DWG NO. G2-4.13

TRACS NO. SL680 01C | TEA-PRV-0(205)T | ____ OF ____

F.H.W.A. REGION	STATE	PROJECT NO.	SHEET NO.	TOTAL SHEETS	AS BUILT
9	ARIZ.	TEA-PRV-0(205)T			
		PRV 0000 YV			

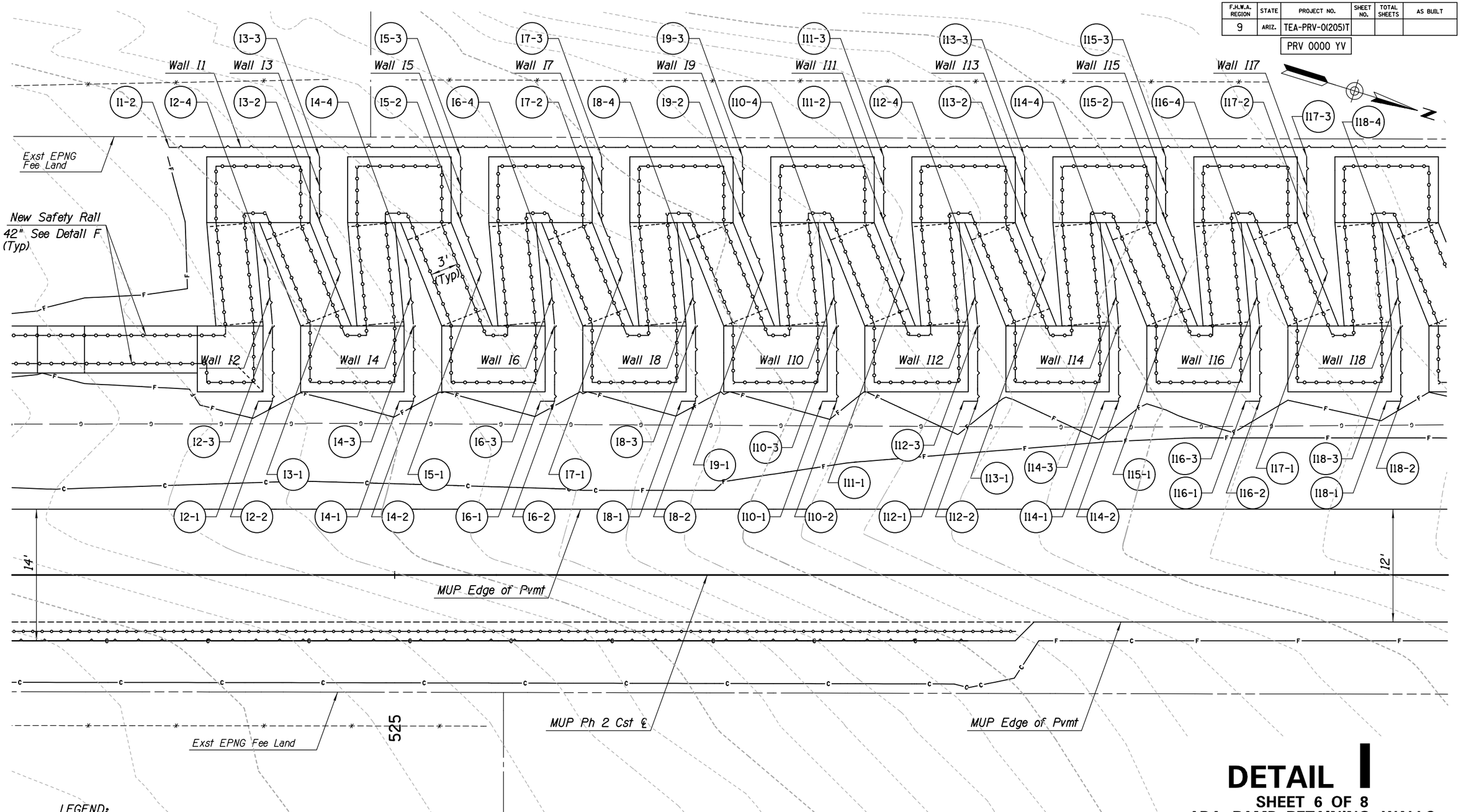

DETAIL I

SHEET 6 OF 8
ADA RAMP RETAINING WALLS

LEGEND:

(X) Pt. No. see Detail I Sheet 8 of 8.

NOTES:

1. See Detail I Sheet 8 of 8 for Retaining Wall Horizontal Control Information.
2. See DWG NO. S2-1.04 to S2-1.17 for Retaining Wall Profiles.
3. See Detail X for Additional Retaining Wall Information.

NOTE:

Caution, EPNG high pressure natural gas line present. EPNG Supervisor should be contacted at 928-527-6535 a minimum of 72 hours prior to any construction activities inside EPNG property.

	NAME	DATE
DESIGN	SMG	06/14
DRAWN	CPG	06/14
CHECKED	GPF	06/14

PARSONS BRINCKERHOFF

ARIZONA DEPARTMENT OF TRANSPORTATION
INTERMODAL TRANSPORTATION DIVISION
ROADWAY DESIGN SECTION

DETAIL SHEET
DETAIL I

ROUTE | LOCATION: PRESCOTT VALLEY PIPELINE & CENTRAL CORE MULTI-USE PATHS (PIPELINE PHASE 2)

Registered Professional Engineer (Civil) CERTIFICATE NO. 49430 GREGORY PATRICK FLY ARIZONA U.S.A.
Expires 3/31/2015

DWG NO. G2-4.14

TRACS NO. SL680 01C | TEA-PRV-0(205)T | ___ OF ___

DATE- LOCATION- REVISIONS- FINISHED PLANS- SURVEY NO.

F.H.W.A. REGION	STATE	PROJECT NO.	SHEET NO.	TOTAL SHEETS	AS BUILT
9	ARIZ.	TEA-PRV-0(205)T			
		PRV 0000 YV			

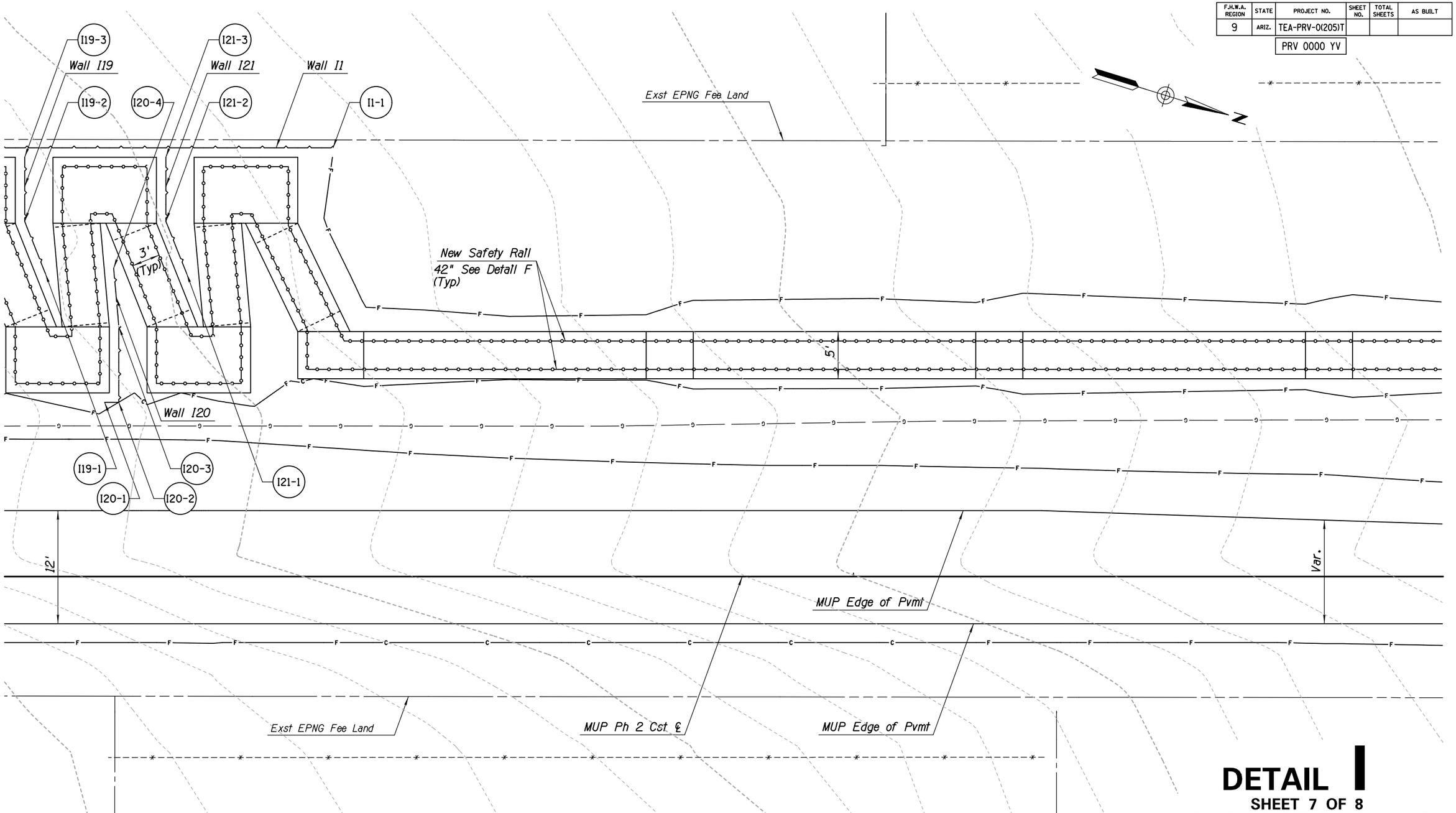

DETAIL I

SHEET 7 OF 8
ADA RAMP RETAINING WALLS

LEGEND:

(X) Pt. No. see Detail I Sheet 8 of 8.

NOTES:

1. See Detail I Sheet 8 of 8 for Retaining Wall Information.
2. See DWG. NO. S2-1.04 to S2-1.17 for Retaining Wall Profiles.
3. See Detail X for Additional Retaining Wall Information.

NOTE:
Caution, EPNG high pressure natural gas line present. EPNG Supervisor should be contacted at 928-527-6535 a minimum of 72 hours prior to any construction activities inside EPNG property.

	NAME	DATE
DESIGN	SMG	06/14
DRAWN	CPG	06/14
CHECKED	GPF	06/14

PARSONS BRINCKERHOFF

ARIZONA DEPARTMENT OF TRANSPORTATION
INTERMODAL TRANSPORTATION DIVISION
ROADWAY DESIGN SECTION

DETAIL SHEET
DETAIL I

ROUTE | LOCATION: PRESCOTT VALLEY PIPELINE & CENTRAL CORE MULTI-USE PATHS (PIPELINE PHASE 2)

Registered Professional Engineer (Civil) CERTIFICATE NO. 49430 GREGORY PATRICK FLY ARIZONA U.S.A. Expires 3/31/2015

DWG NO. G2-4.15

TRACS NO. SL680 01C | TEA-PRV-0(205)T | ___ OF ___

DATE- LOCATION- REVISIONS- FINISHED PLANS- SURVEY NO.

F.H.W.A. REGION	STATE	PROJECT NO.	SHEET NO.	TOTAL SHEETS	AS BUILT
9	ARIZ.	TEA-PRV-0(205)T			
		PRV 0000 YV			

HORIZONTAL RETAINING WALL CONTROL

Wall	Point No.	Reference Roadway Cst ℄	Station	Offset	TOW Elevation
I1	I1-1	MUP Ph 2 Cst ℄	526+44.75	45.50 Lt	4949.88
	I1-2	MUP Ph 2 Cst ℄	524+76.00	45.50 Lt	4966.63
I2	I2-1	MUP Ph 2 Cst ℄	524+85.50	18.50 Lt	4967.71
	I2-2	MUP Ph 2 Cst ℄	524+87.00	18.50 Lt	4967.71
	I2-3	MUP Ph 2 Cst ℄	524+87.00	26.55 Lt	4967.71
	I2-4	MUP Ph 2 Cst ℄	524+86.45	32.73 Lt	4967.71
I3	I3-1	MUP Ph 2 Cst ℄	524+94.20	32.17 Lt	4966.22
	I3-2	MUP Ph 2 Cst ℄	524+92.00	37.69 Lt	4966.22
	I3-3	MUP Ph 2 Cst ℄	524+92.00	44.50 Lt	4966.22
I4	I4-1	MUP Ph 2 Cst ℄	525+00.50	18.50 Lt	4966.01
	I4-2	MUP Ph 2 Cst ℄	525+02.00	18.50 Lt	4966.01
	I4-3	MUP Ph 2 Cst ℄	525+02.00	26.55 Lt	4966.01
	I4-4	MUP Ph 2 Cst ℄	525+01.45	32.73 Lt	4966.01
I5	I5-1	MUP Ph 2 Cst ℄	525+09.20	32.17 Lt	4964.93
	I5-2	MUP Ph 2 Cst ℄	525+07.00	37.69 Lt	4964.93
	I5-3	MUP Ph 2 Cst ℄	525+07.00	44.50 Lt	4964.93
I6	I6-1	MUP Ph 2 Cst ℄	525+15.50	18.50 Lt	4964.31
	I6-2	MUP Ph 2 Cst ℄	525+17.00	18.50 Lt	4964.31
	I6-3	MUP Ph 2 Cst ℄	525+17.00	26.55 Lt	4964.31
	I6-4	MUP Ph 2 Cst ℄	525+16.45	32.73 Lt	4964.31
I7	I7-1	MUP Ph 2 Cst ℄	525+24.20	32.17 Lt	4963.23
	I7-2	MUP Ph 2 Cst ℄	525+22.00	37.69 Lt	4963.23
	I7-3	MUP Ph 2 Cst ℄	525+22.00	44.50 Lt	4963.23
I8	I8-1	MUP Ph 2 Cst ℄	525+30.50	18.50 Lt	4962.61
	I8-2	MUP Ph 2 Cst ℄	525+32.00	18.50 Lt	4962.61
	I8-3	MUP Ph 2 Cst ℄	525+32.00	26.55 Lt	4962.61
	I8-4	MUP Ph 2 Cst ℄	525+31.45	32.73 Lt	4962.61
I9	I9-1	MUP Ph 2 Cst ℄	525+39.20	32.17 Lt	4961.53
	I9-2	MUP Ph 2 Cst ℄	525+37.00	37.69 Lt	4961.53
	I9-3	MUP Ph 2 Cst ℄	525+37.00	44.50 Lt	4961.53
I10	I10-1	MUP Ph 2 Cst ℄	525+45.50	18.50 Lt	4960.91
	I10-2	MUP Ph 2 Cst ℄	525+47.00	18.50 Lt	4960.91
	I10-3	MUP Ph 2 Cst ℄	525+47.00	26.55 Lt	4960.91
	I10-4	MUP Ph 2 Cst ℄	525+46.45	32.73 Lt	4960.91
I11	I11-1	MUP Ph 2 Cst ℄	525+54.20	32.17 Lt	4959.82
	I11-2	MUP Ph 2 Cst ℄	525+52.00	37.69 Lt	4959.82
	I11-3	MUP Ph 2 Cst ℄	525+52.00	44.50 Lt	4959.82

HORIZONTAL RETAINING WALL CONTROL

Wall	Point No.	Reference Roadway Cst ℄	Station	Offset	TOW Elevation
I12	I12-1	MUP Ph 2 Cst ℄	525+60.50	18.50 Lt	4959.21
	I12-2	MUP Ph 2 Cst ℄	525+62.00	18.50 Lt	4959.21
	I12-3	MUP Ph 2 Cst ℄	525+62.00	26.55 Lt	4959.21
	I12-4	MUP Ph 2 Cst ℄	525+61.45	32.73 Lt	4959.21
I13	I13-1	MUP Ph 2 Cst ℄	525+69.20	32.17 Lt	4958.13
	I13-2	MUP Ph 2 Cst ℄	525+67.00	37.69 Lt	4958.13
	I13-3	MUP Ph 2 Cst ℄	525+67.00	44.50 Lt	4958.13
I14	I14-1	MUP Ph 2 Cst ℄	525+75.50	18.50 Lt	4957.51
	I14-2	MUP Ph 2 Cst ℄	525+77.00	18.50 Lt	4957.51
	I14-3	MUP Ph 2 Cst ℄	525+77.00	26.55 Lt	4957.51
	I14-4	MUP Ph 2 Cst ℄	525+76.45	32.73 Lt	4957.51
I15	I15-1	MUP Ph 2 Cst ℄	525+84.20	32.17 Lt	4956.43
	I15-2	MUP Ph 2 Cst ℄	525+82.00	37.69 Lt	4956.43
	I15-3	MUP Ph 2 Cst ℄	525+82.00	44.50 Lt	4956.43
I16	I16-1	MUP Ph 2 Cst ℄	525+90.50	18.50 Lt	4955.81
	I16-2	MUP Ph 2 Cst ℄	525+92.00	18.50 Lt	4955.81
	I16-3	MUP Ph 2 Cst ℄	525+92.00	26.55 Lt	4955.81
	I16-4	MUP Ph 2 Cst ℄	525+91.45	32.73 Lt	4955.81
I17	I17-1	MUP Ph 2 Cst ℄	525+99.20	32.17 Lt	4954.73
	I17-2	MUP Ph 2 Cst ℄	525+97.00	37.69 Lt	4954.73
	I17-3	MUP Ph 2 Cst ℄	525+97.00	44.50 Lt	4954.73
I18	I18-1	MUP Ph 2 Cst ℄	526+05.50	18.50 Lt	4954.1
	I18-2	MUP Ph 2 Cst ℄	526+07.00	18.50 Lt	4954.1
	I18-3	MUP Ph 2 Cst ℄	526+07.00	26.55 Lt	4954.1
	I18-4	MUP Ph 2 Cst ℄	526+06.45	32.73 Lt	4954.1
I19	I19-1	MUP Ph 2 Cst ℄	526+14.20	32.17 Lt	4953.03
	I19-2	MUP Ph 2 Cst ℄	526+12.00	37.69 Lt	4953.03
	I19-3	MUP Ph 2 Cst ℄	526+12.00	44.50 Lt	4953.03
I20	I20-1	MUP Ph 2 Cst ℄	526+20.50	18.50 Lt	4952.41
	I20-2	MUP Ph 2 Cst ℄	526+22.00	18.50 Lt	4952.41
	I20-3	MUP Ph 2 Cst ℄	526+22.00	26.55 Lt	4952.41
	I20-4	MUP Ph 2 Cst ℄	526+21.45	32.73 Lt	4952.41
I21	I21-1	MUP Ph 2 Cst ℄	526+29.20	32.17 Lt	4951.33
	I21-2	MUP Ph 2 Cst ℄	526+27.00	37.69 Lt	4951.33
	I21-3	MUP Ph 2 Cst ℄	526+27.00	44.50 Lt	4951.33

DETAIL I

SHEET 8 OF 8
ADA RAMP RETAINING WALLS

NOTES:

1. See DWG NO. S2-1.04 to S2-1.17 for Retaining Wall Profiles.
2. See Detail X for Additional Retaining Wall Information.

	NAME	DATE
DESIGN	SMG	06/14
DRAWN	CPG	06/14
CHECKED	GPF	06/14

PARSONS BRINCKERHOFF

ARIZONA DEPARTMENT OF TRANSPORTATION
INTERMODAL TRANSPORTATION DIVISION
ROADWAY DESIGN SECTION

DETAIL SHEET
DETAIL I

ROUTE | LOCATION: PRESCOTT VALLEY PIPELINE & CENTRAL CORE MULTI-USE PATHS (PIPELINE PHASE 2)

Registered Professional Engineer (Civil) CERTIFICATE NO. 49430 GREGORY PATRICK FLY ARIZONA U.S.A.
Expires 3/31/2015

DWG NO. G2-4.16

TRACS NO. SL680 01C | TEA-PRV-0(205)T | ___ OF ___

F.H.W.A. REGION	STATE	PROJECT NO.	SHEET NO.	TOTAL SHEETS	AS BUILT
9	ARIZ.	TEA-PRV-0(205)T			
		PRV 0000 YV			

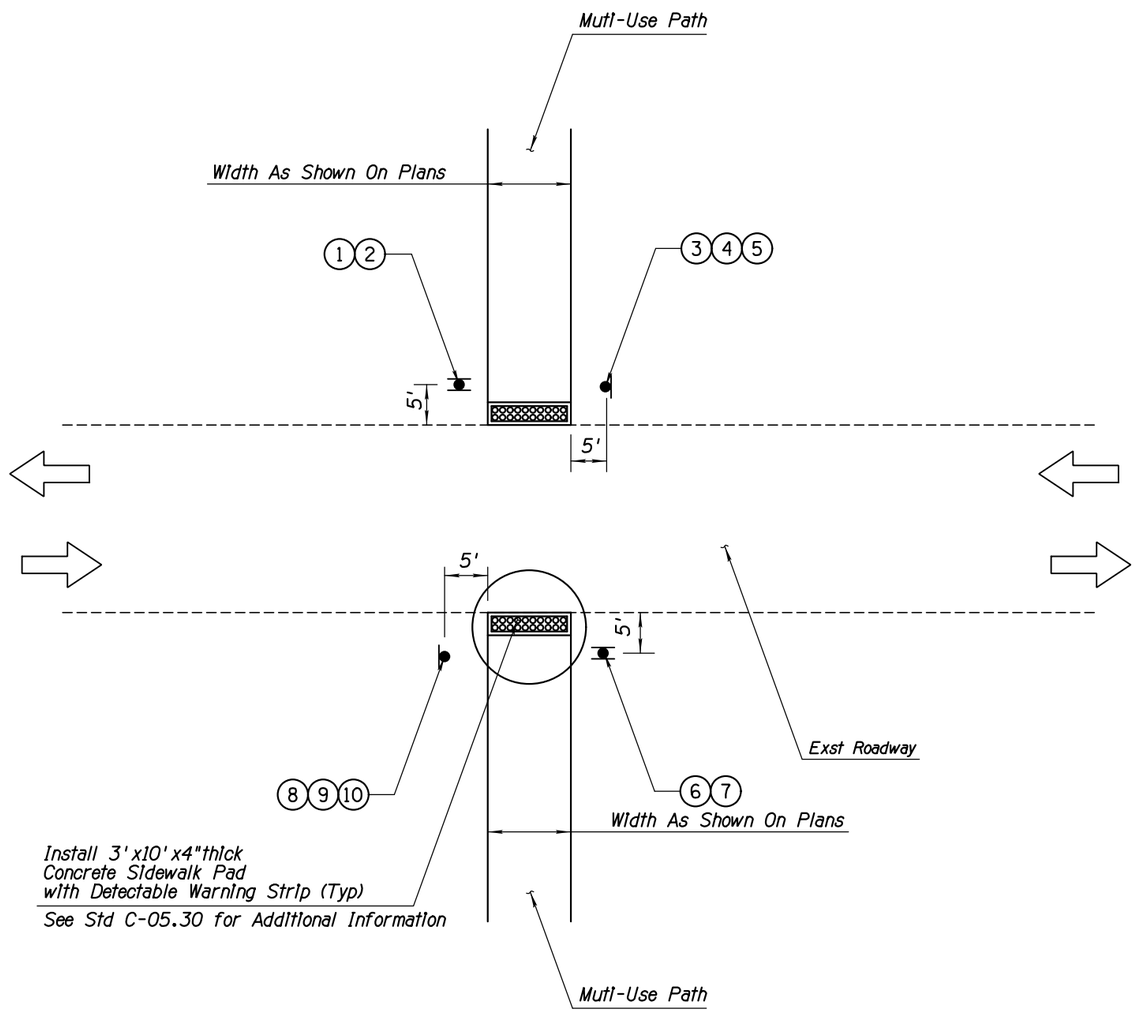

TYPICAL PATH CROSSING
PLAN VIEW
N.T.S.

NOTES:

1. See the Sign Summary Sheet for Additional Information.
2. The Configuration Shown Represents a Typical Application Where the Path Crosses an Existing Street, Utilizing MUTCD Figure 9B-7. Field Modifications Permitted as Approved by the Engineer.
3. See Plan Sheets for Locations.

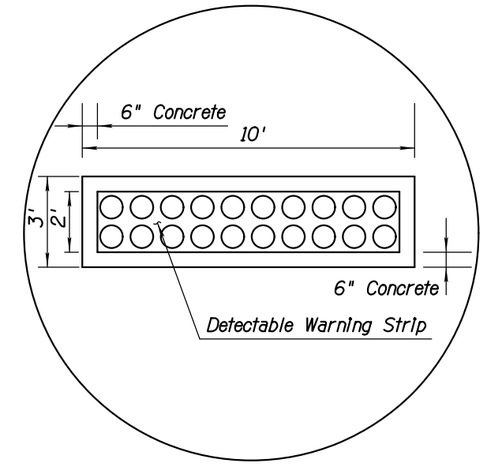

LEGEND:

(X) - Sign Number (See Sign Summary Sheet)

- - - - - Existing Pavement

——— New Path

DETAIL J

TYPICAL PATH CROSSING AT STREETS

	NAME	DATE
DESIGN	SMG	06/14
DRAWN	CPG	06/14
CHECKED	GPF	06/14

PARSONS BRINCKERHOFF

ARIZONA DEPARTMENT OF TRANSPORTATION
INTERMODAL TRANSPORTATION DIVISION
ROADWAY DESIGN SECTION

DETAIL SHEET
DETAIL J

Registered Professional Engineer (Civil) CERTIFICATE NO. 49430 GREGORY PATRICK FLY ARIZONA U.S.A. Expires 3/31/2015

ROUTE | LOCATION: PRESCOTT VALLEY PIPELINE & CENTRAL CORE MULTI-USE PATHS (PIPELINE PHASE 2)

DWG NO. G2-4.17

TRACS NO. SL680 01C | TEA-PRV-0(205)T | ___ OF ___

DATE- LOCATION- REVISIONS- FINISHED PLANS- SURVEY NO.

9/12/2014 T:\Prescott_MUP\SL641_ph2\DATA\SL641_dte.dgn

F.H.W.A. REGION	STATE	PROJECT NO.	SHEET NO.	TOTAL SHEETS	AS BUILT
9	ARIZ.	TEA-PRV-0(205)T			
		PRV 0000 YV			

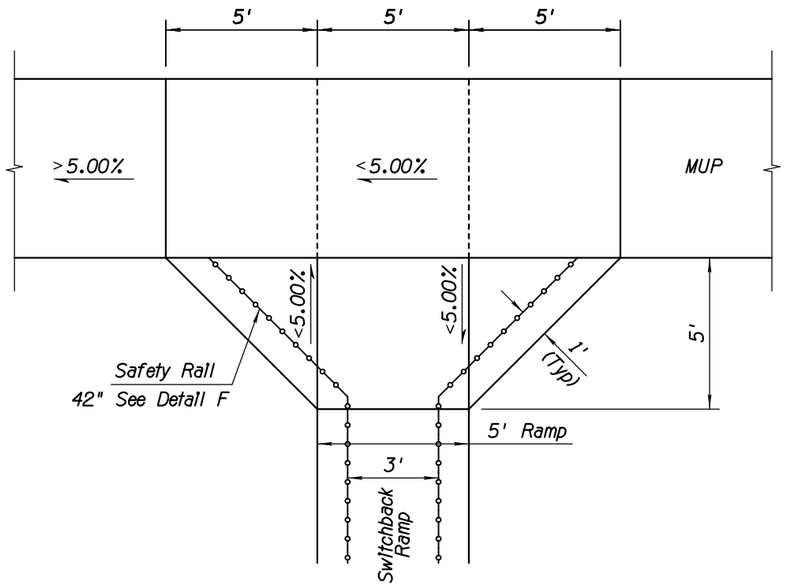

TYPICAL SWITCHBACK RAMP ENTRANCE/EXIT ADJACENT TO MAIN PATH
N.T.S.

Slopes and Elevations Vary Depending on Slope of Multi-Use Path

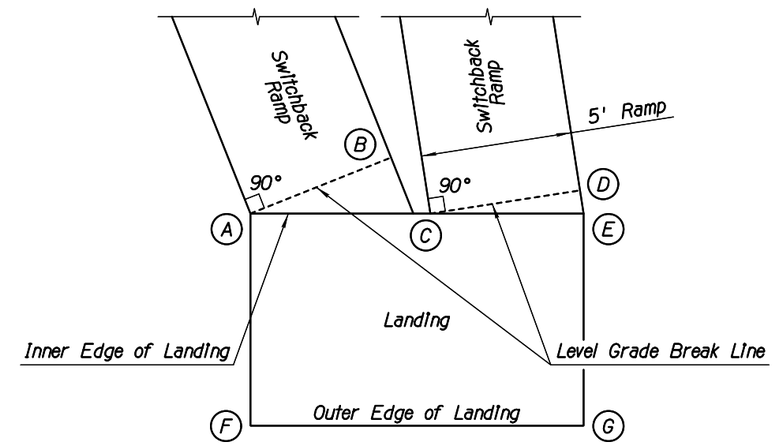

TYPICAL SWITCHBACK LANDING STAKING DIAGRAM
N.T.S.

Skew of Ramps Varies to Mimic Existing Contours

Notes:

1. *Applies to Landings that have two Switchback Ramp Tie-Ins along the Inner Edge of the Landing.*
2. *Data for Points A and E is provided in Details H & I. These two points have the same elevation.*
3. *Points B, C, and D have the same Elevation as Points A and E.*
4. *Points A and B represent a 5'-wide level grade break line for the associated Switchback Ramp to Tie-In to the Landing. This grade break is perpendicular to the length of the Ramp.*
5. *Points F and G have an Elevation 0.01' higher than Points A and E.*

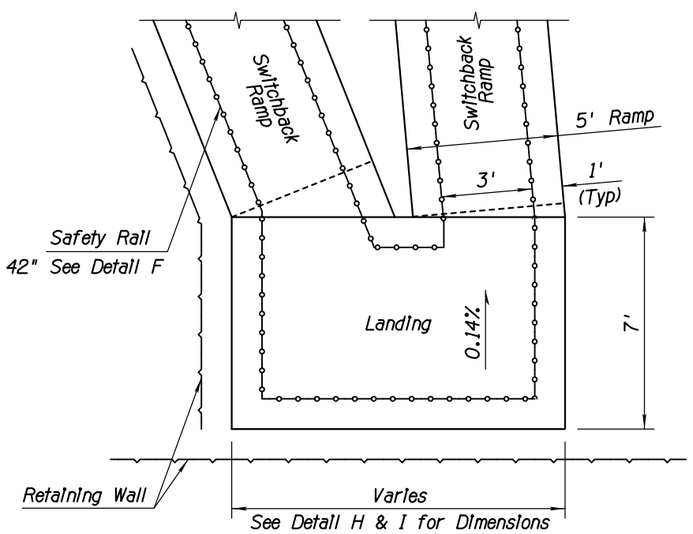

TYPICAL SWITCHBACK LANDING DETAIL OPPOSITE TO MAIN PATH
N.T.S.

Slopes and Elevations Vary Depending on Slope of Multi-Use Path

Note:

1. *See Details H & I for Location & Wall Elevation*

DETAIL K

SWITCHBACK RAMPS AND LANDINGS
SHEET 1 OF 2

	NAME	DATE
DESIGN	SMG	06/14
DRAWN	CPG	06/14
CHECKED	GPF	06/14

PARSONS BRINCKERHOFF

ARIZONA DEPARTMENT OF TRANSPORTATION
INTERMODAL TRANSPORTATION DIVISION
ROADWAY DESIGN SECTION

DETAIL SHEET
DETAIL K

ROUTE | LOCATION: PRESCOTT VALLEY PIPELINE & CENTRAL CORE MULTI-USE PATHS (PIPELINE PHASE 2)

Registered Professional Engineer (Civil) CERTIFICATE NO. 49430 GREGORY PATRICK FLY ARIZONA U.S.A.
Expires 3/31/2015

DWG NO. G2-4.18

TRACS NO. SL680 01C | TEA-PRV-0(205)T | ____ OF ____

DATE- LOCATION- REVISIONS- FINISHED PLANS- SURVEY NO.

F.H.W.A. REGION	STATE	PROJECT NO.	SHEET NO.	TOTAL SHEETS	AS BUILT
9	ARIZ.	TEA-PRV-0(205)T			
		PRV 0000 YV			

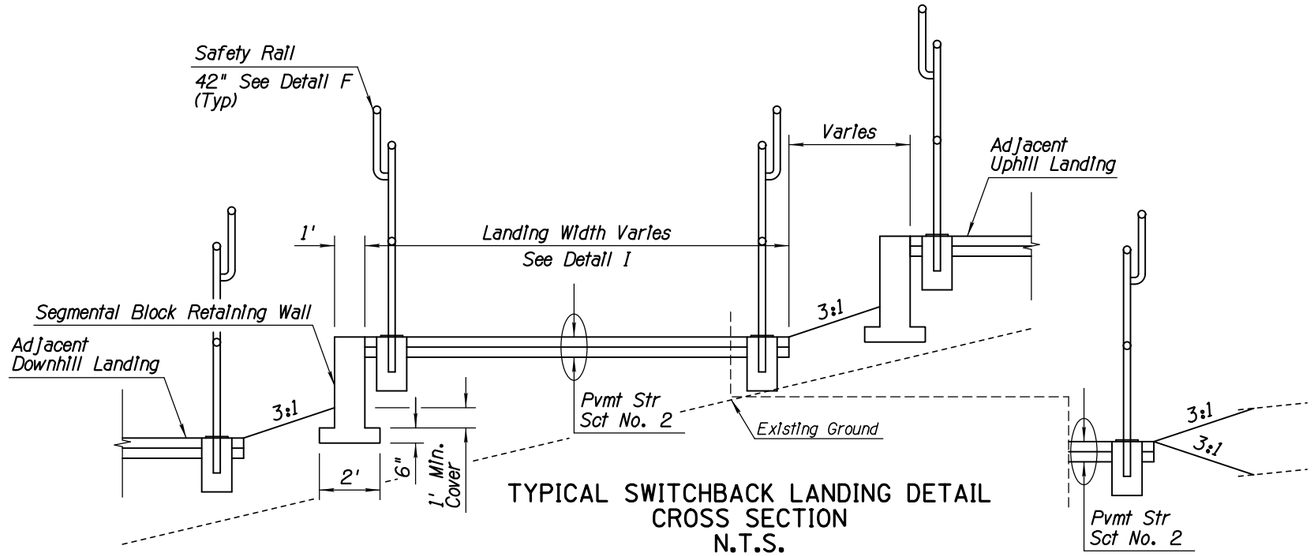

TYPICAL SWITCHBACK LANDING DETAIL
CROSS SECTION
N.T.S.

Slopes and Elevations Vary Depending on
Slope of Multi-Use Path.
30% Slope Is Project Maximum.

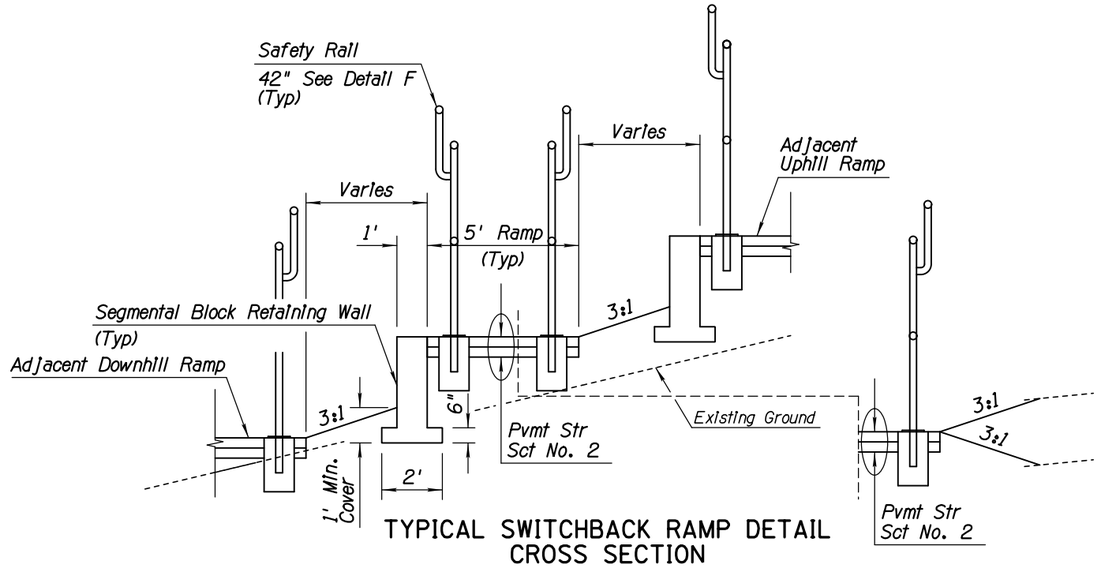

TYPICAL SWITCHBACK RAMP DETAIL
CROSS SECTION
N.T.S.

Slopes and Elevations Vary Depending on
Slope of Multi-Use Path.
30% Slope Is Project Maximum.

Note:

1. See Details H & I for Location & Wall Elevation.
2. See Detail X for Additional Retaining Wall Information.

DETAIL K

SWITCHBACK RAMPS AND LANDINGS
SHEET 2 OF 2

	NAME	DATE
DESIGN	SMG	06/14
DRAWN	CPG	06/14
CHECKED	GPF	06/14

PARSONS BRINCKERHOFF

ARIZONA DEPARTMENT OF TRANSPORTATION
INTERMODAL TRANSPORTATION DIVISION
ROADWAY DESIGN SECTION

DETAIL SHEET
DETAIL K

ROUTE | LOCATION PRESCOTT VALLEY PIPELINE & CENTRAL CORE MULTI-USE PATHS (PIPELINE PHASE 2)

Registered Professional Engineer (Civil) CERTIFICATE NO. 49450 GREGORY PATRICK FLY ARIZONA U.S.A.
Expires 3/31/2015

DWG NO. G2-4.19

TRACS NO. SL680 01C | TEA-PRV-0(205)T | ____ OF ____

DATE- | LOCATION- | REVISIONS- | FINISHED PLANS- | SURVEY NO.

9/12/2014 T:\Prescott_MUP\SL641_ph2\DATA\SL641_dtf02.dgn

F.H.W.A. REGION	STATE	PROJECT NO.	SHEET NO.	TOTAL SHEETS	AS BUILT
9	ARIZ.	TEA-PRV-0(205)T			
		PRV 0000 YV			

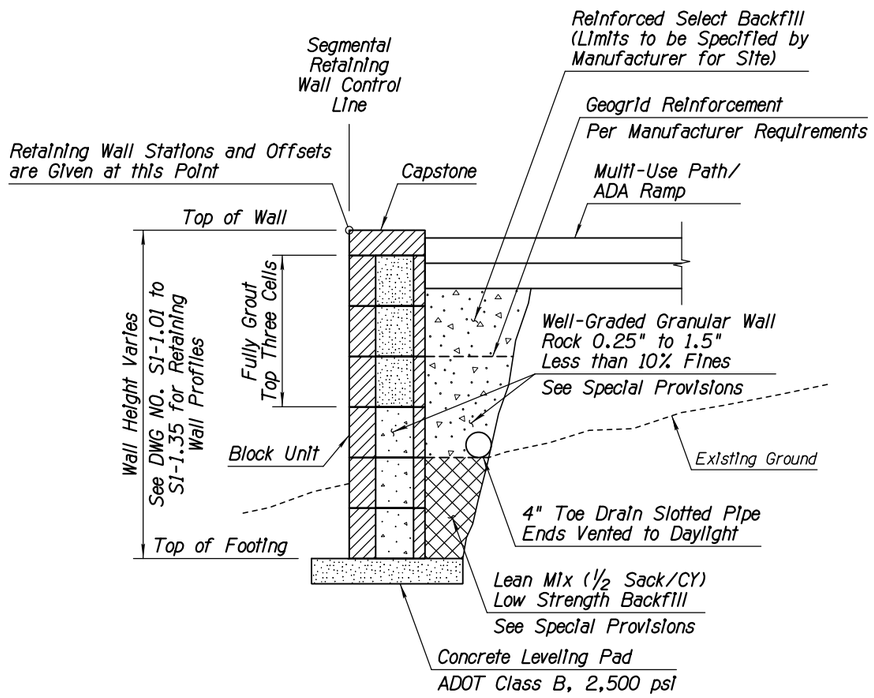

SEGMENTAL RETAINING WALL
SECTION VIEW
FILL SCENARIO

NOT TO SCALE

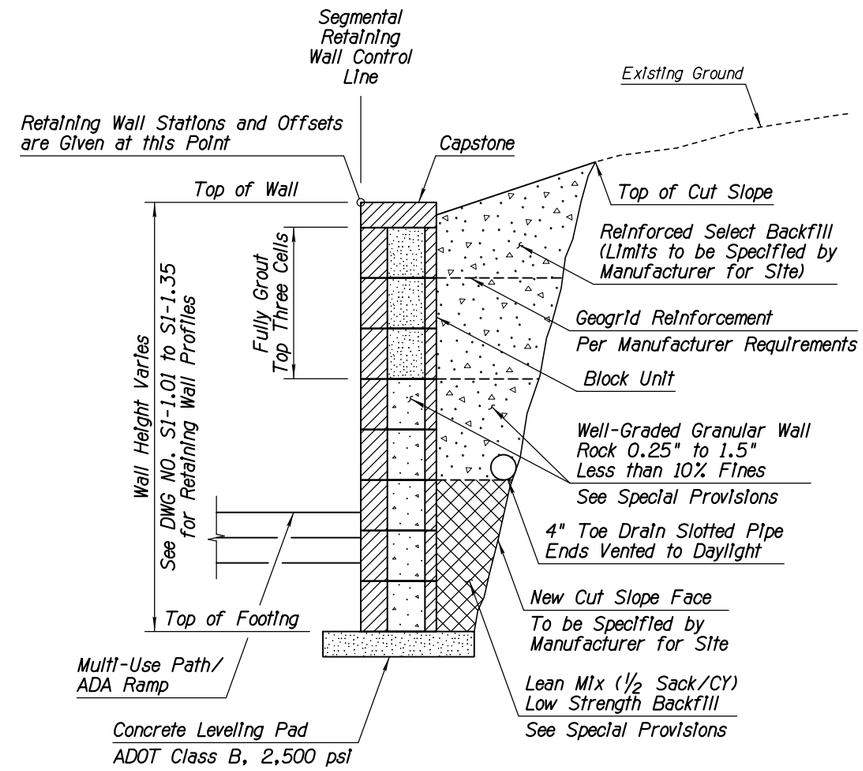

SEGMENTAL RETAINING WALL
SECTION VIEW
CUT SCENARIO

NOT TO SCALE

Notes:

1. *See Special Provision for Requirements on Segmental Retaining Wall and Geogrid Reinforcement.*
2. *Contractor Shall Provide Engineered Design for Wall, Sealed by a Professional Engineer Registered in Arizona.*
3. *Limits of Select and/or Structural Backfill Determined by Wall Designer.*
4. *Provide Proposed Drain/Vent Layout Plan with Shop Drawings for Review/Approval to Engineer.*
5. *See Plans for Handrail Locations*
6. *Segmental Retaining Walls that are Located Adjacent to the Multi-Use Path will be Designed to Accomodate an H15-44 Loading.*

DETAIL X

SEGMENTAL RETAINING WALL

	NAME	DATE
DESIGN	SMG	06/14
DRAWN	CPG	06/14
CHECKED	GPF	06/14

PARSONS BRINCKERHOFF

ARIZONA DEPARTMENT OF TRANSPORTATION
INTERMODAL TRANSPORTATION DIVISION
ROADWAY DESIGN SECTION

DETAIL SHEET
DETAIL X

Registered Professional Engineer (Civil) CERTIFICATE NO. 49430 GREGORY PATRICK FLY ARIZONA U.S.A.
Expires 3/31/2015

ROUTE | LOCATION PRESCOTT VALLEY PIPELINE & CENTRAL CORE MULTI-USE PATHS (PIPELINE PHASE 2)

DWG NO. G2-4.20

TRACS NO. SL680 01C | TEA-PRV-0(205)T | ____ OF ____

SURVEY NO. | FINISHED PLANS- | REVISIONS- | LOCATION- | DATE-

F.H.W.A. REGION	STATE	PROJECT NO.	SHEET NO.	TOTAL SHEETS	AS BUILT
9	ARIZ.	TEA-PRV-0(205)T			
		PRV 0000 YV			

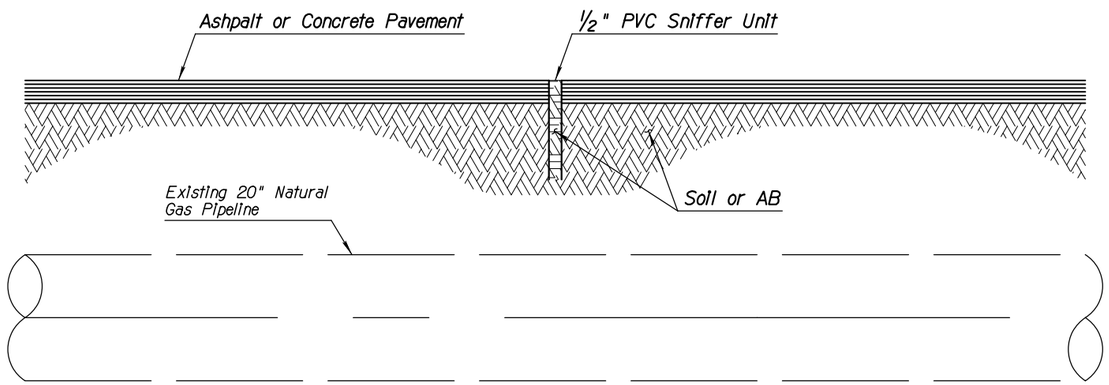

EPNG SNIFFER UNIT
ELEVATION VIEW
NOT TO SCALE

Note:

The PVC Units will be Open-Ended with the Tops Even or Flush with the Top of the Pavement and will Extend Vertically through the Pavement to the Soil or Sub Base Material.

DETAIL Y
EPNG SNIFFER UNITS

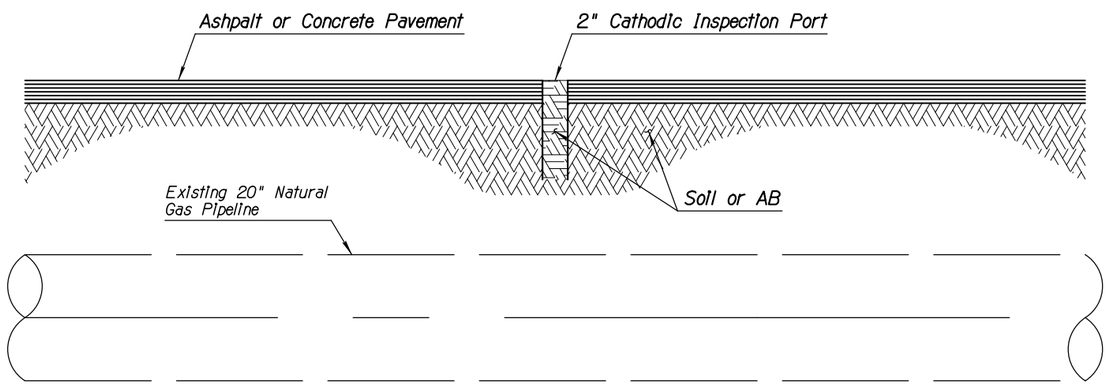

EPNG CATHODIC INSPECTION PORT
ELEVATION VIEW
NOT TO SCALE

Note:

The Cathodic Inspection Ports will be Open-Ended with the Tops Even or Flush with the Top of the Pavement and will Extend Vertically through the Pavement to the Soil or Sub Base Material.

DETAIL Z
EPNG CATHODIC INSPECTION PORTS

	NAME	DATE
DESIGN	SMG	06/14
DRAWN	CPG	06/14
CHECKED	GPF	06/14

PARSONS BRINCKERHOFF

ARIZONA DEPARTMENT OF TRANSPORTATION
INTERMODAL TRANSPORTATION DIVISION
ROADWAY DESIGN SECTION

DETAIL SHEET
DETAILS Y & Z

Registered Professional Engineer (Civil) CERTIFICATE NO. 49430 GREGORY PATRICK FLY ARIZONA U.S.A. Expires 3/31/2015

ROUTE | LOCATION: PRESCOTT VALLEY PIPELINE & CENTRAL CORE MULTI-USE PATHS (PIPELINE PHASE 2)

DWG NO. G2-4.21

TRACS NO. SL680 01C | TEA-PRV-0(205)T | ___ OF ___

DATE- | LOCATION- | REVISIONS- | FINISHED PLANS- | SURVEY NO.

F.H.W.A. REGION	STATE	PROJECT NO.	SHEET NO.	TOTAL SHEETS	AS BUILT
9	ARIZ.	TEA-PRV-0(205)T			
		PRV 0000 YV			

All Coordinates Are Ground Coordinates And All Bearings Are Grid Bearings

G.A.F. = 1.00032

PLAN REF NO.	LOCATION	P.I./P.O.T. STATION	COORDINATES									
100	MUP Ph 2 Cst ℄ POB	500+00.00	N=1315347.59	E=580846.40								
101	MUP Ph 2 Cst ℄ PC	501+85.40	N=1315524.66	E=580791.47								
102	MUP Ph 2 Cst ℄ PI	502+06.39	N=1315544.71	E=580785.26	SIMPLE	Δ=9°35'55"	R=250.00'	T=20.99'	L=41.88'	Ext=0.88'	e=NC	
103	MUP Ph 2 Cst ℄ PRC	502+27.28	N=1315565.51	E=580782.47								
104	MUP Ph 2 Cst ℄ PI	502+48.27	N=1315586.32	E=580779.68	SIMPLE	Δ=9°35'55"	R=250.00'	T=20.99'	L=41.88'	Ext=0.88'	e=NC	
105	MUP Ph 2 Cst ℄ PT	502+69.16	N=1315606.36	E=580773.46								
106	MUP Ph 2 Cst ℄ POE	540+63.17	N=1319230.05	E=579649.45								

CENTERLINE CONTROL POINT AND CURVE DATA TABLE

All bearings and angles have been rounded to the nearest second.
Use the control points provided and their respective state plane coordinates to re-establish the centerline of each path.

	NAME	DATE
DESIGN	SMG	06/14
DRAWN	CPG	06/14
CHECKED	GPF	06/14

PARSONS BRINCKERHOFF

ARIZONA DEPARTMENT OF TRANSPORTATION
INTERMODAL TRANSPORTATION DIVISION
ROADWAY DESIGN SECTION

GEOMETRIC SUMMARY SHEET

ROUTE | LOCATION PRESCOTT VALLEY PIPELINE & CENTRAL CORE MULTI-USE PATHS (PIPELINE PHASE 2)

Registered Professional Engineer (Civil) CERTIFICATE NO. 49430 GREGORY PATRICK FLY ARIZONA U.S.A.
Expires 3/31/2015

DWG NO. C2-1.01

TRACS NO. SL680 01C | TEA-PRV-0(205)T | ___ OF ___

DATE- LOCATION- REVISIONS- FINISHED PLANS- SURVEY NO.

F.H.W.A. REGION	STATE	PROJECT NO.	SHEET NO.	TOTAL SHEETS	AS BUILT
9	ARIZ.	TEA-PRV-0(205)T			
		PRV 0000 YV			

NOTE:

The contractor shall install 2" PVC Cathodic Inspection Ports on 20' centers, whenever a paved surface is located directly above the centerline of the EPNG high pressure natural gas line. The PVC units will be open-ended with the tops even or flush with the top of the paved surface and will extend vertically through the paved surface to the subgrade.

The contractor shall install 1/2" PVC Sniffer Units on 40' centers, whenever a paved surface is located within 10' of the EPNG high pressure natural gas line. The PVC units will be open-ended with the tops even or flush with the top of the paved surface and will extend vertically through the paved surface to the subgrade.

The PVC Sniffer Units and PVC Cathodic Inspection Ports shall be filled with Roadway Embankment Material.

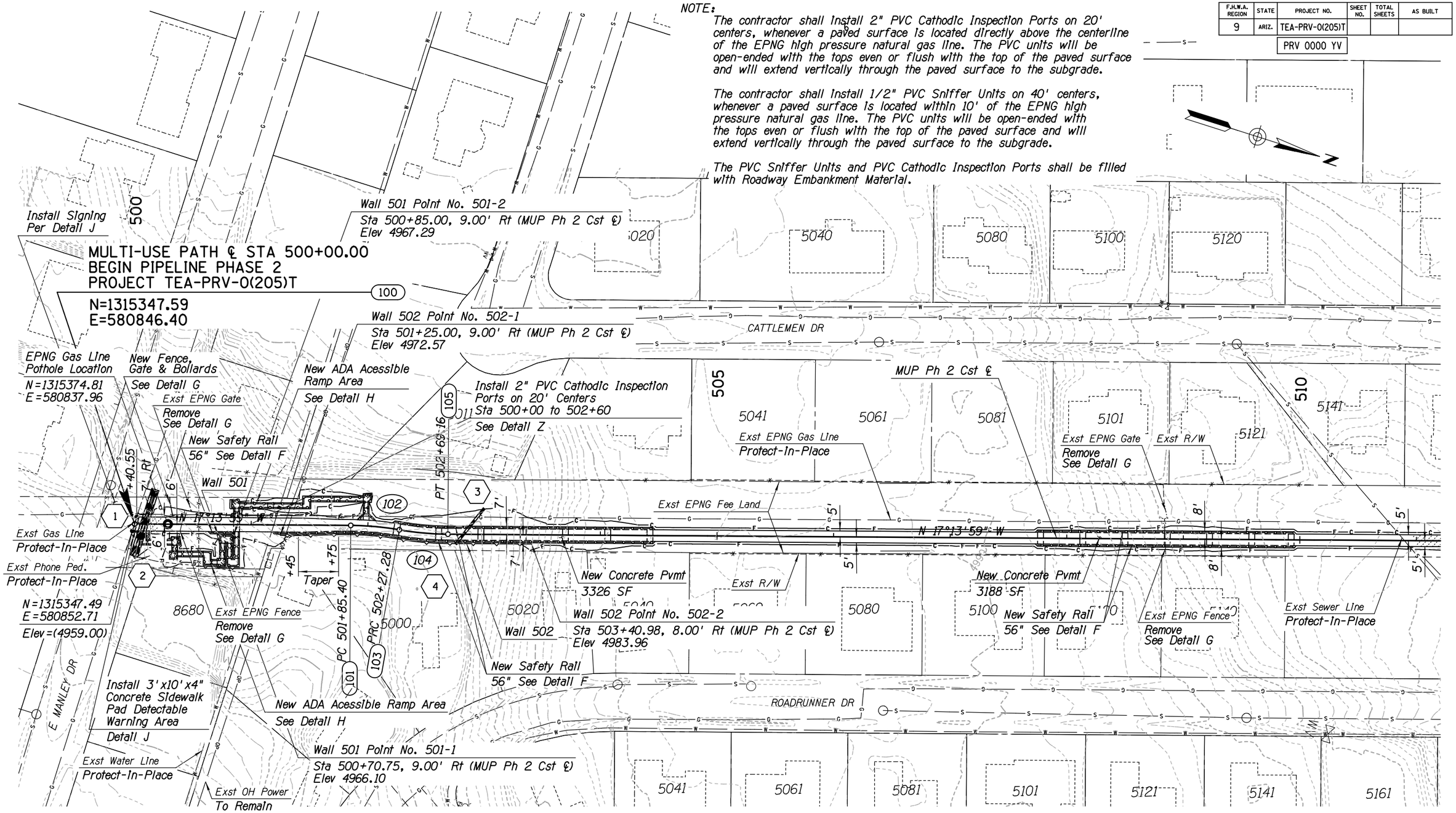

NOTE:

Caution, EPNG high pressure natural gas line present. EPNG Supervisor should be contacted at 928-527-6535 a minimum of 72 hours prior to any construction activities inside EPNG property.

NOTES:

1. For detailed ADA accessible ramp information See Detail H.
2. See DWG NO. S2-1.18 to S2-1.24 for retaining wall information.

	NAME	DATE
DESIGN	SMG	06/14
DRAWN	CPG	06/14
CHECKED	GPF	06/14

PARSONS BRINCKERHOFF

ARIZONA DEPARTMENT OF TRANSPORTATION
INTERMODAL TRANSPORTATION DIVISION
ROADWAY DESIGN SECTION

PLAN SHEET
Sta 500+00 to Sta 511+00

ROUTE | LOCATION: PRESCOTT VALLEY PIPELINE & CENTRAL CORE MULTI-USE PATHS (PIPELINE PHASE 2)

Registered Professional Engineer (Civil) CERTIFICATE NO. 49430 GREGORY PATRICK FLY ARIZONA U.S.A. Expires 3/31/2015

DWG NO. C2-2.01

TRACS NO. SL680 01C | TEA-PRV-0(205)T | ___ OF ___

DATE- LOCATION- REVISIONS- FINISHED PLANS- SURVEY NO.

9/12/2014 I:\Prescott_MUP\SL641_ph2\MUP\SL641-pl01.dgn

F.H.W.A. REGION	STATE	PROJECT NO.	SHEET NO.	TOTAL SHEETS	AS BUILT
9	ARIZ.	TEA-PRV-0(205)T			

PRV 0000 YV

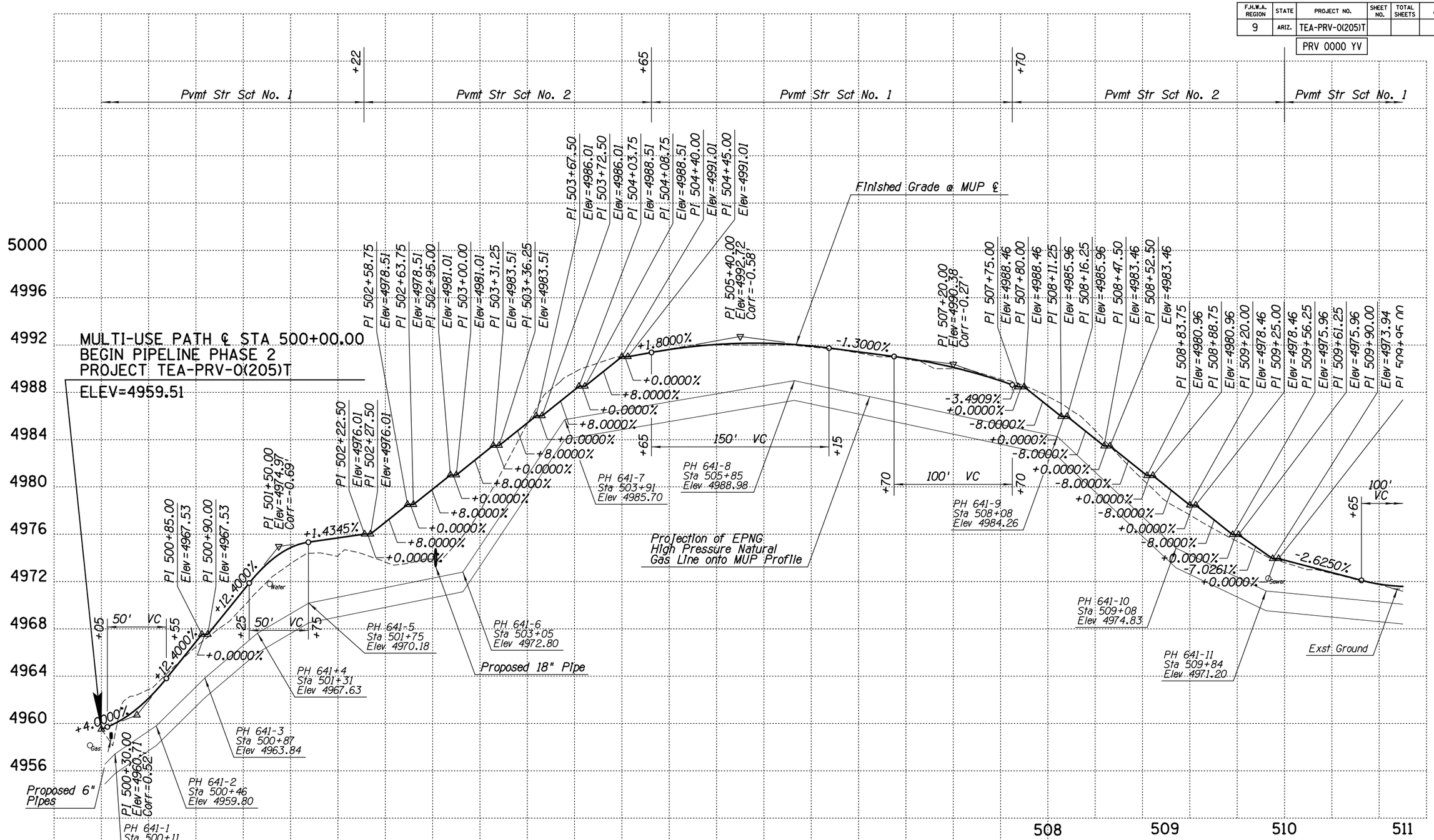

	NAME	DATE
DESIGN	SMG	06/14
DRAWN	CPG	06/14
CHECKED	GPF	06/14

PARSONS BRINCKERHOFF

ARIZONA DEPARTMENT OF TRANSPORTATION
INTERMODAL TRANSPORTATION DIVISION
ROADWAY DESIGN SECTION

PROFILE SHEET
Sta 500+00 to Sta 511+00

ROUTE | LOCATION PRESCOTT VALLEY PIPELINE & CENTRAL CORE MULTI-USE PATHS (PIPELINE PHASE 2)

Registered Professional Engineer (Civil) CERTIFICATE NO. 49430 GREGORY PATRICK FLY ARIZONA U.S.A. Expires 3/31/2015

DWG NO. C2-2.02

TRACS NO. SL680 01C | TEA-PRV-0(205)T | ___ OF ___

DATE- LOCATION- REVISIONS- FINISHED PLANS- SURVEY NO.

9/12/2014 T:\Prescott_MUP\SL641_ph2\MUP\SL641_prf01.dgn

F.H.W.A. REGION	STATE	PROJECT NO.	SHEET NO.	TOTAL SHEETS	AS BUILT
9	ARIZ.	TEA-PRV-0(205)T			

PRV 0000 YV

NOTE:
From Sta 514+00 to 540+63.17, the contractor shall assume that there is less than 2' of cover over the existing EPNG gas line. Therefore, wheel loads exceeding 2500 lbs are prohibited for vehicles that cross the existing EPNG gas line.

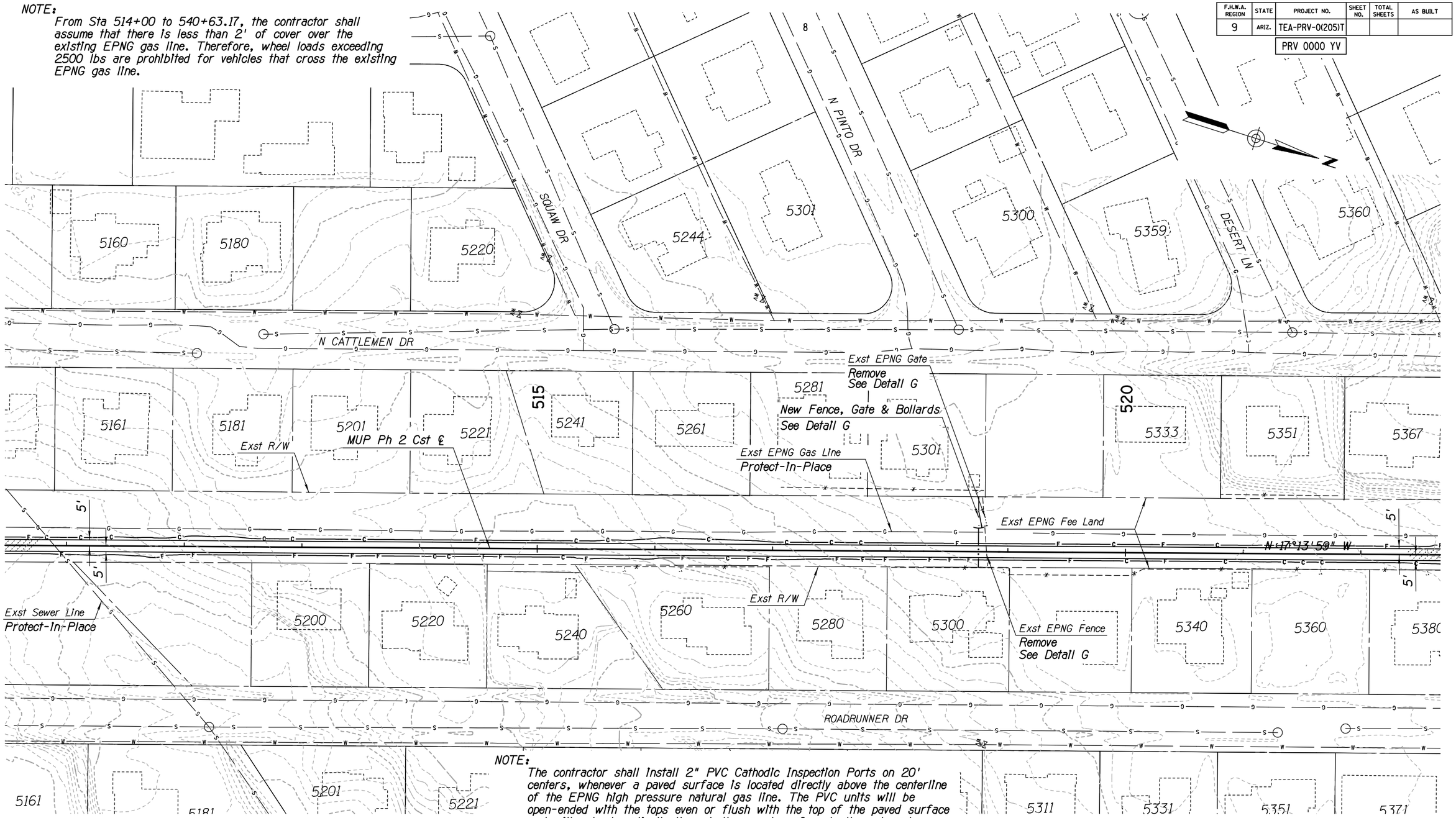

NOTE:
The contractor shall install 2" PVC Cathodic Inspection Ports on 20' centers, whenever a paved surface is located directly above the centerline of the EPNG high pressure natural gas line. The PVC units will be open-ended with the tops even or flush with the top of the paved surface and will extend vertically through the paved surface to the subgrade.

The contractor shall install 1/2" PVC Sniffer Units on 40' centers, whenever a paved surface is located within 10' of the EPNG high pressure natural gas line. The PVC units will be open-ended with the tops even or flush with the top of the paved surface and will extend vertically through the paved surface to the subgrade.

The PVC Sniffer Units and PVC Cathodic Inspection Ports shall be filled with Roadway Embankment Material.

NOTE:
Caution, EPNG high pressure natural gas line present. EPNG Supervisor should be contacted at 928-527-6535 a minimum of 72 hours prior to any construction activities inside EPNG property.

	NAME	DATE
DESIGN	SMG	06/14
DRAWN	CPG	06/14
CHECKED	GPF	06/14

PARSONS BRINCKERHOFF

ARIZONA DEPARTMENT OF TRANSPORTATION
INTERMODAL TRANSPORTATION DIVISION
ROADWAY DESIGN SECTION

PLAN SHEET
Sta 511+00 to Sta 522+20

ROUTE | LOCATION PRESCOTT VALLEY PIPELINE & CENTRAL CORE MULTI-USE PATHS (PIPELINE PHASE 2)

Registered Professional Engineer (Civil) CERTIFICATE NO. 49430 GREGORY PATRICK FLY ARIZONA U.S.A.
Expires 3/31/2015

DWG NO. C2-2.03

TRACS NO. SL680 01C | TEA-PRV-0(205)T | ___ OF ___

F.H.W.A. REGION	STATE	PROJECT NO.	SHEET NO.	TOTAL SHEETS	AS BUILT
9	ARIZ.	TEA-PRV-0(205)T			

PRV 0000 YV

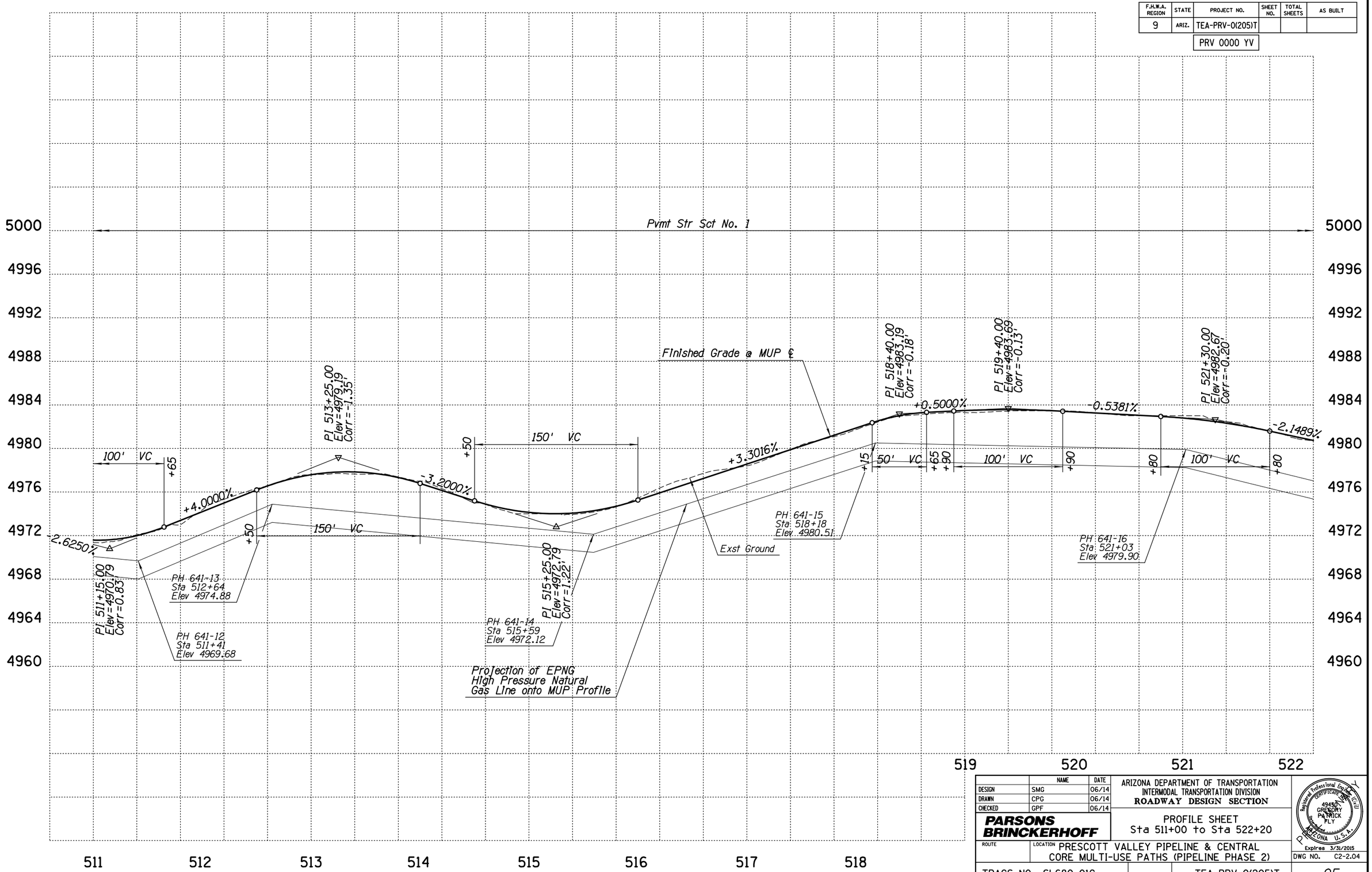

	NAME	DATE
DESIGN	SMG	06/14
DRAWN	CPG	06/14
CHECKED	GPF	06/14

ARIZONA DEPARTMENT OF TRANSPORTATION
INTERMODAL TRANSPORTATION DIVISION
ROADWAY DESIGN SECTION

PARSONS BRINCKERHOFF

PROFILE SHEET
Sta 511+00 to Sta 522+20

ROUTE | LOCATION: PRESCOTT VALLEY PIPELINE & CENTRAL CORE MULTI-USE PATHS (PIPELINE PHASE 2)

Registered Professional Engineer (Civil) CERTIFICATE NO. 49450 GREGORY PATRICK FLY ARIZONA U.S.A. Expires 3/31/2015

DWG NO. C2-2.04

TRACS NO. SL680 01C | TEA-PRV-0(205)T | ____ OF ____

DATE- LOCATION- REVISIONS- FINISHED PLANS- SURVEY NO.

9/12/2014 T:\Prescott_MUP\SL641_ph2\MUP\SL641_prf02.dgn

F.H.W.A. REGION	STATE	PROJECT NO.	SHEET NO.	TOTAL SHEETS	AS BUILT
9	ARIZ.	TEA-PRV-0(205)T			
		PRV 0000 YV			

NOTE:
From Sta 514+00 to 540+63.17, the contractor shall assume that there is less than 2' of cover over the existing EPNG gas line. Therefore, wheel loads exceeding 2500 lbs are prohibited for vehicles that cross the existing EPNG gas line.

NOTE:
The contractor shall install 2" PVC Cathodic Inspection Ports on 20' centers, whenever a paved surface is located directly above the centerline of the EPNG high pressure natural gas line. The PVC units will be open-ended with the tops even or flush with the top of the paved surface and will extend vertically through the paved surface to the subgrade.

The contractor shall install 1/2" PVC Sniffer Units on 40' centers, whenever a paved surface is located within 10' of the EPNG high pressure natural gas line. The PVC units will be open-ended with the tops even or flush with the top of the paved surface and will extend vertically through the paved surface to the subgrade.

The PVC Sniffer Units and PVC Cathodic Inspection Ports shall be filled with Roadway Embankment Material.

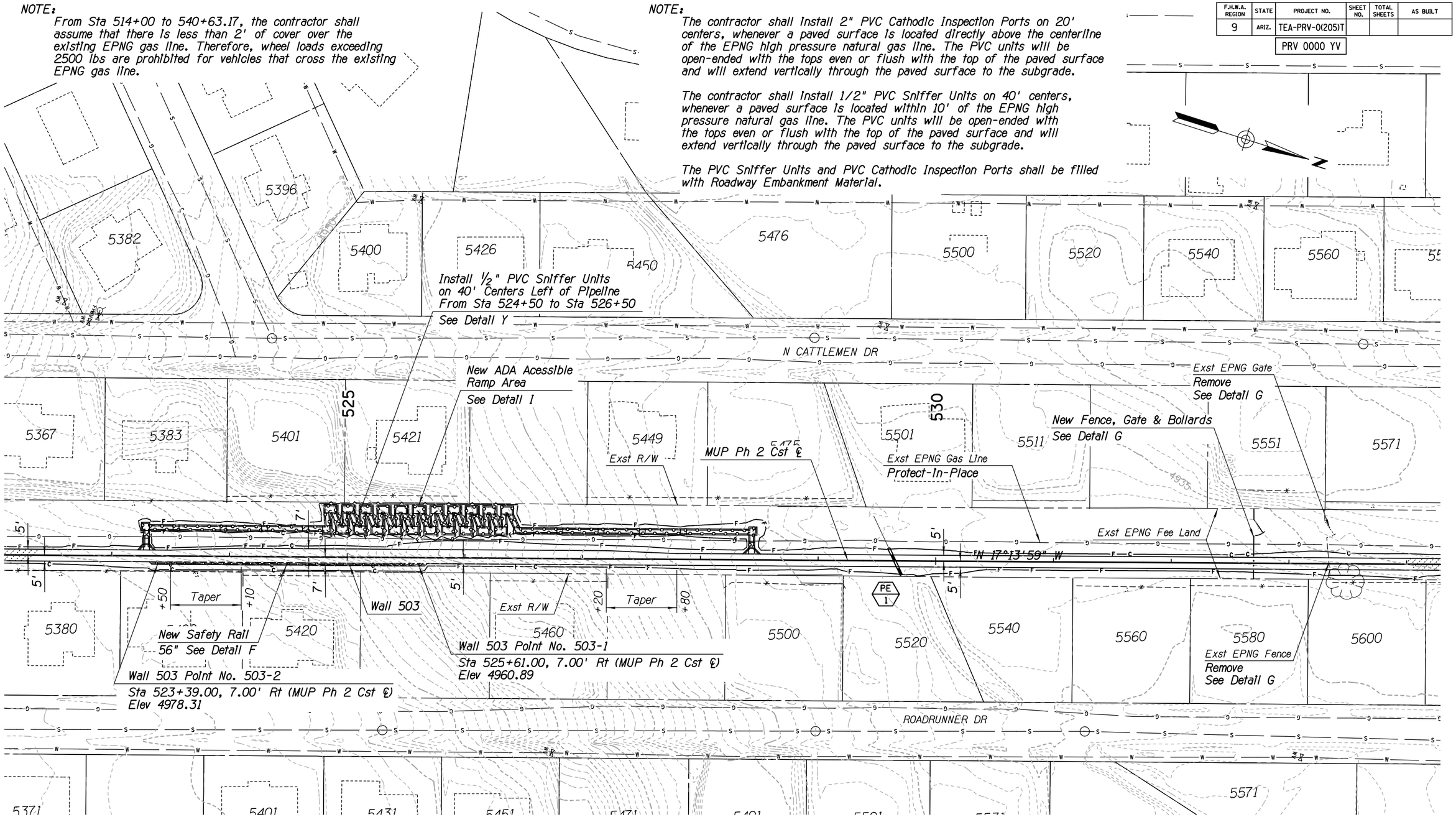

NOTE:
Caution, EPNG high pressure natural gas line present. EPNG Supervisor should be contacted at 928-527-6535 a minimum of 72 hours prior to any construction activities inside EPNG property.

NOTES:

1. For detailed ADA accessible ramp information See Detail I.
2. See DWG NO. S2-1.25 to S2-1.33 for retaining wall information.

	NAME	DATE
DESIGN	SMG	06/14
DRAWN	CPG	06/14
CHECKED	GPF	06/14

PARSONS BRINCKERHOFF

ARIZONA DEPARTMENT OF TRANSPORTATION
INTERMODAL TRANSPORTATION DIVISION
ROADWAY DESIGN SECTION

PLAN SHEET
Sta 522+20 to Sta 533+60

ROUTE | LOCATION PRESCOTT VALLEY PIPELINE & CENTRAL CORE MULTI-USE PATHS (PIPELINE PHASE 2)

Registered Professional Engineer (Civil) CERTIFICATE NO. 49450 GREGORY PATRICK FLY ARIZONA U.S.A.
Expires 3/31/2015

DWG NO. C2-2.05

TRACS NO. SL680 01C | TEA-PRV-0(205)T | ___ OF ___

F.H.W.A. REGION	STATE	PROJECT NO.	SHEET NO.	TOTAL SHEETS	AS BUILT
9	ARIZ.	TEA-PRV-0(205)T			
		PRV 0000 YV			

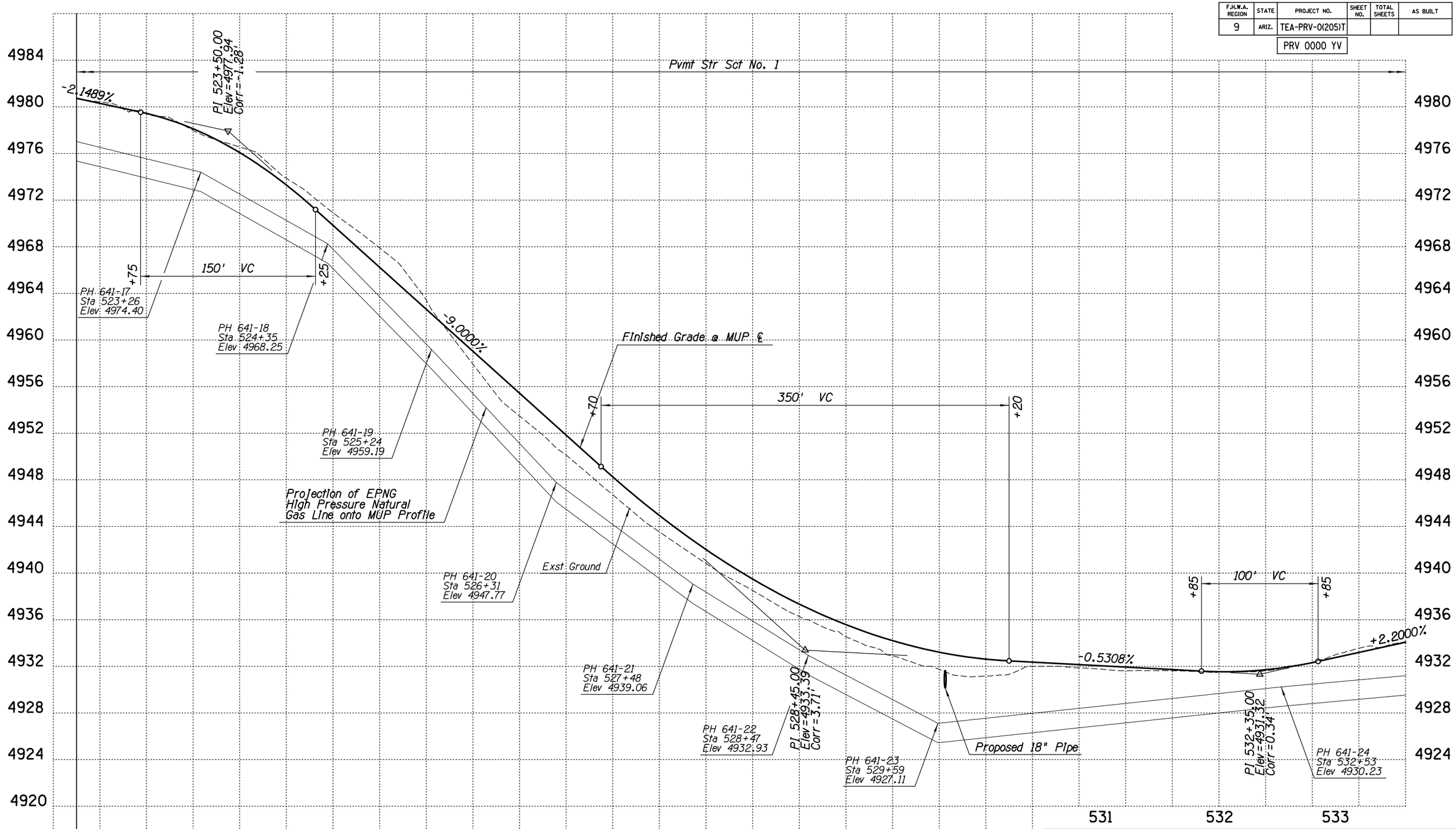

	NAME	DATE
DESIGN	SMG	06/14
DRAWN	CPG	06/14
CHECKED	GPF	06/14

PARSONS BRINCKERHOFF

ARIZONA DEPARTMENT OF TRANSPORTATION
INTERMODAL TRANSPORTATION DIVISION
ROADWAY DESIGN SECTION

PROFILE SHEET
Sta 522+20 to Sta 533+60

ROUTE | LOCATION: PRESCOTT VALLEY PIPELINE & CENTRAL CORE MULTI-USE PATHS (PIPELINE PHASE 2)

Registered Professional Engineer (Civil) CERTIFICATE 49430 GREGORY PATRICK FLY ARIZONA U.S.A.
Expires 3/31/2015

DWG NO. C2-2.06

TRACS NO. SL680 01C | TEA-PRV-0(205)T | ____ OF ____

DATE- LOCATION- REVISIONS- FINISHED PLANS- SURVEY NO.

9/12/2014 T:\Prescott_MUP\SL641_ph2\MUP\SL641_prf03.dgn

F.H.W.A. REGION	STATE	PROJECT NO.	SHEET NO.	TOTAL SHEETS	AS BUILT
9	ARIZ.	TEA-PRV-0(205)T			
		PRV 0000 YV			

NOTE:
The contractor shall install 2" PVC Cathodic Inspection Ports on 20' centers, whenever a paved surface is located directly above the centerline of the EPNG high pressure natural gas line. The PVC units will be open-ended with the tops even or flush with the top of the paved surface and will extend vertically through the paved surface to the subgrade.

The contractor shall install 1/2" PVC Sniffer Units on 40' centers, whenever a paved surface is located within 10' of the EPNG high pressure natural gas line. The PVC units will be open-ended with the tops even or flush with the top of the paved surface and will extend vertically through the paved surface to the subgrade.

The PVC Sniffer Units and PVC Cathodic Inspection Ports shall be filled with Roadway Embankment Material.

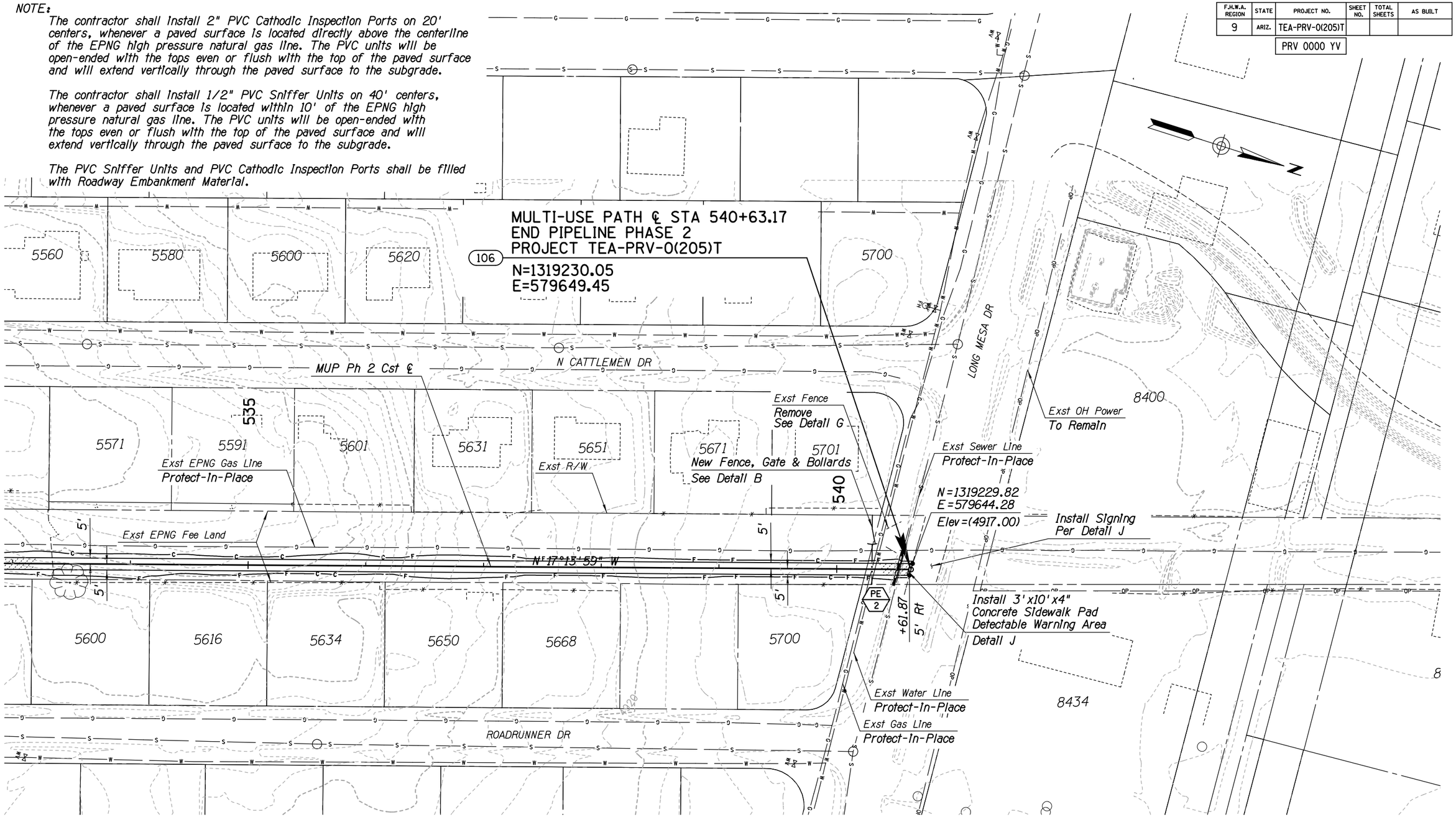

NOTE:
Caution, EPNG high pressure natural gas line present. EPNG Supervisor should be contacted at 928-527-6535 a minimum of 72 hours prior to any construction activities inside EPNG property.

NOTE:
From Sta 514+00 to 540+63.17, the contractor shall assume that there is less than 2' of cover over the existing EPNG gas line. Therefore, wheel loads exceeding 2500 lbs are prohibited for vehicles that cross the existing EPNG gas line.

	NAME	DATE
DESIGN	SMG	06/14
DRAWN	CPG	06/14
CHECKED	GPF	06/14

PARSONS BRINCKERHOFF

ARIZONA DEPARTMENT OF TRANSPORTATION
INTERMODAL TRANSPORTATION DIVISION
ROADWAY DESIGN SECTION

PLAN SHEET
Sta 533+60 to Sta 540+63.17

ROUTE | LOCATION: PRESCOTT VALLEY PIPELINE & CENTRAL CORE MULTI-USE PATHS (PIPELINE PHASE 2)

Registered Professional Engineer (Civil) CERTIFICATE NO. 49430 GREGORY PATRICK FLY ARIZONA U.S.A. Expires 3/31/2015

DWG NO. C2-2.07

TRACS NO. SL680 01C | TEA-PRV-0(205)T | ___ OF ___

DATE- LOCATION- REVISIONS- FINISHED PLANS- SURVEY NO.

9/12/2014 I:\Prescott_MUP\SL641_ph2\MUP\SL641-p104.dgn

F.H.W.A. REGION	STATE	PROJECT NO.	SHEET NO.	TOTAL SHEETS	AS BUILT
9	ARIZ.	TEA-PRV-0(205)T			
		PRV 0000 YV			

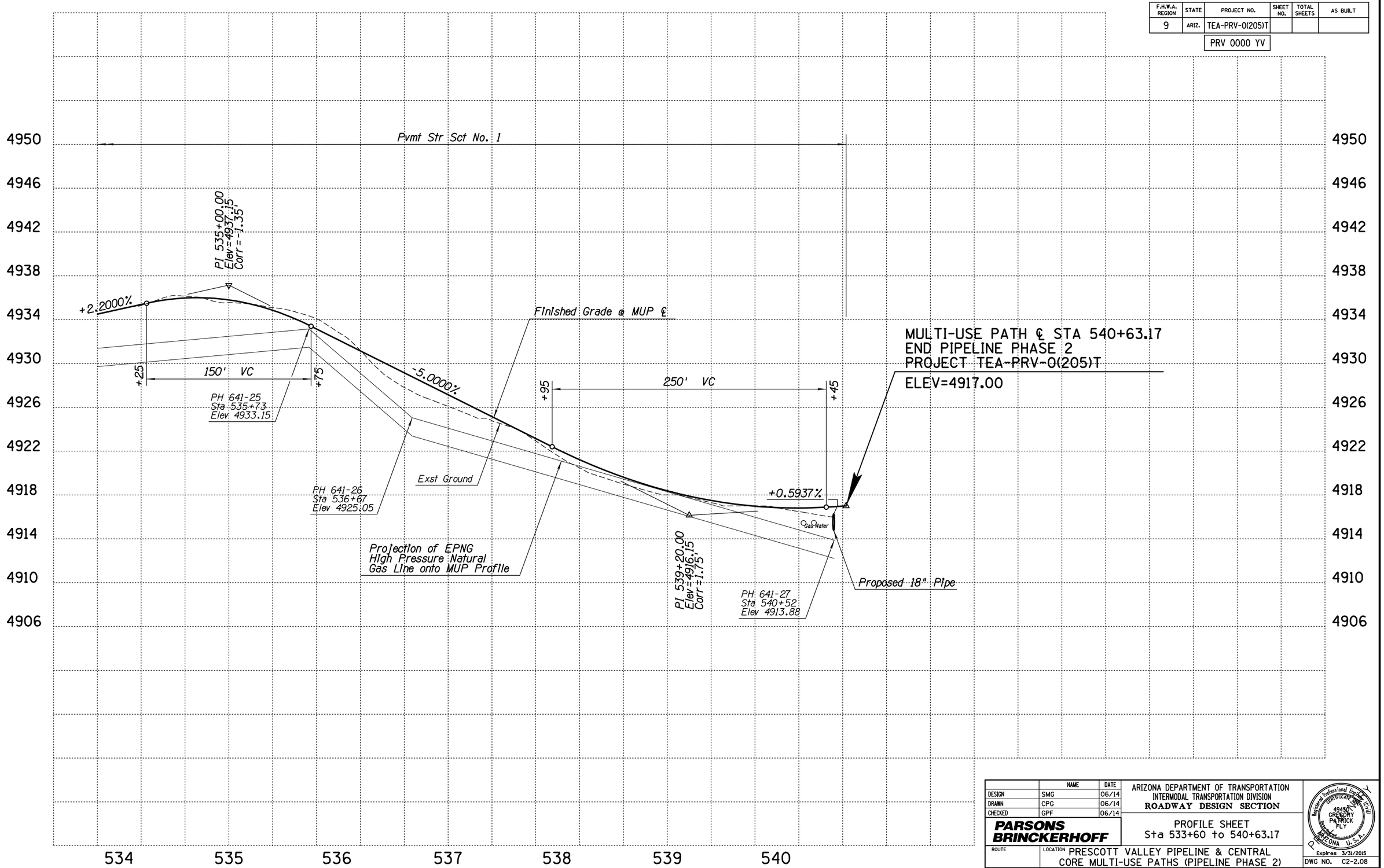

	NAME	DATE
DESIGN	SMG	06/14
DRAWN	CPG	06/14
CHECKED	GPF	06/14

PARSONS BRINCKERHOFF

ARIZONA DEPARTMENT OF TRANSPORTATION
INTERMODAL TRANSPORTATION DIVISION
ROADWAY DESIGN SECTION

PROFILE SHEET
Sta 533+60 to 540+63.17

ROUTE | LOCATION PRESCOTT VALLEY PIPELINE & CENTRAL CORE MULTI-USE PATHS (PIPELINE PHASE 2)

Registered Professional Engineer (Civil) CERTIFICATE 49430 GREGORY PATRICK FLY ARIZONA U.S.A.
Expires 3/31/2015

DWG NO. C2-2.08

TRACS NO. SL680 01C | TEA-PRV-0(205)T | ____ OF ____

DATE- LOCATION- REVISIONS- FINISHED PLANS- SURVEY NO.

9/12/2014 T:\Prescott_MUP\SL641_ph2\MUP\SL641_prf04.dgn

F.H.W.A. REGION	STATE	PROJECT NO.	SHEET NO.	TOTAL SHEETS	AS BUILT
9	ARIZ.	TEA-PRV-0(205)T			
		PRV 0000 YV			

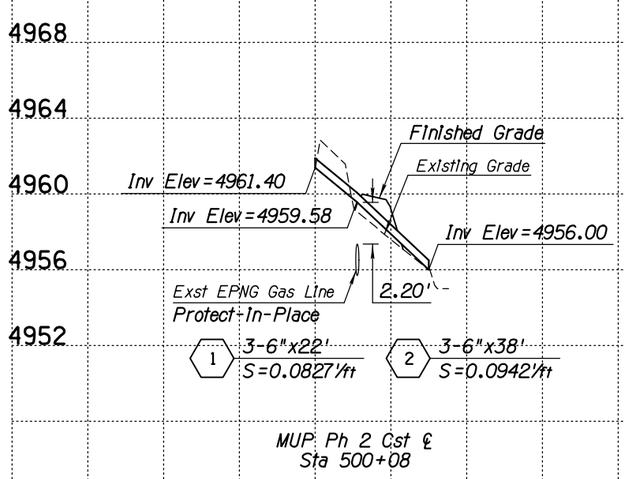

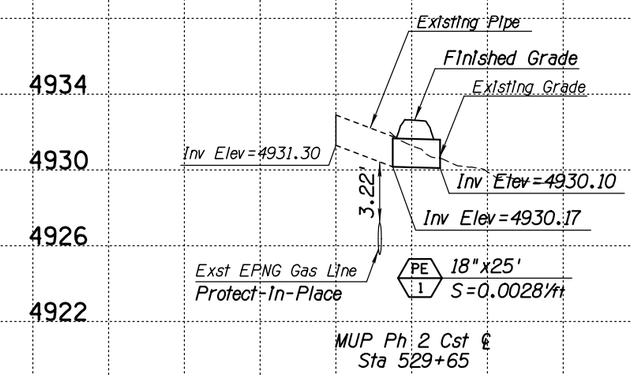

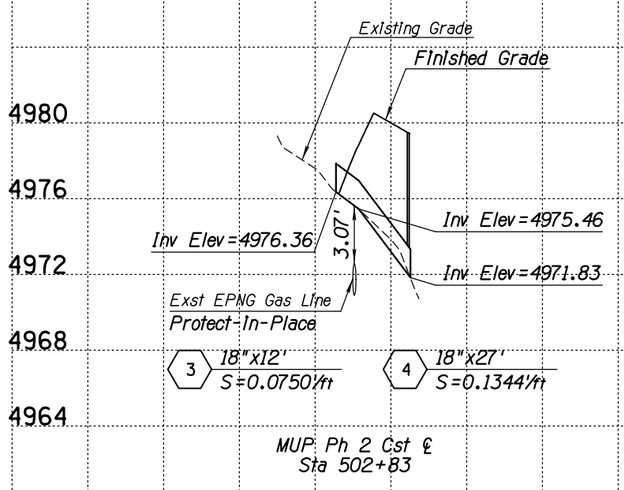

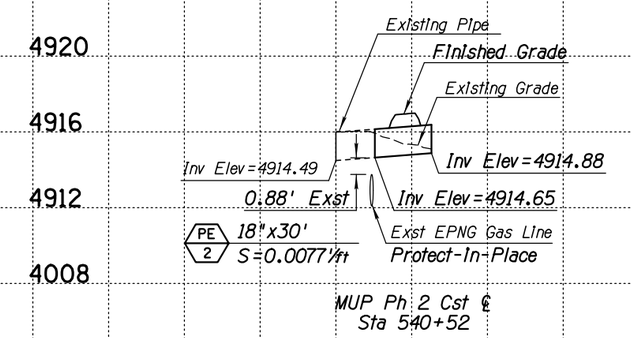

Note:

Contractor shall maintain at least 2' of separation between storm drain pipes and existing EPNG gas line.

	NAME	DATE
DESIGN	SMG	06/14
DRAWN	CPG	06/14
CHECKED	GPF	06/14

PARSONS BRINCKERHOFF

ARIZONA DEPARTMENT OF TRANSPORTATION
INTERMODAL TRANSPORTATION DIVISION
ROADWAY DESIGN SECTION

PIPE PROFILES

Registered Professional Engineer (Civil) CERTIFICATE NO. 49450 GREGORY PATRICK FLY ARIZONA U.S.A. Expires 3/31/2015

ROUTE | LOCATION PRESCOTT VALLEY PIPELINE & CENTRAL CORE MULTI-USE PATHS (PIPELINE PHASE 2)

DWG NO. D2-1.01

TRACS NO. SL680 01C | TEA-PRV-0(205)T | ___ OF ___

DATE- LOCATION- REVISIONS- FINISHED PLANS- SURVEY NO.

F.H.W.A. REGION	STATE	PROJECT NO.	SHEET NO.	TOTAL SHEETS	AS BUILT
9	ARIZ.	TEA-PRV-0(205)T			
		PRV 0000 YV			

SIGNING GENERAL NOTES:

1. ALL SIGNS SHALL BE IN COMPLIANCE WITH THE MANUAL ON UNIFORM TRAFFIC CONTROL DEVICES (MUTCD), THE ADOT SIGNING AND MARKING STANDARD DRAWINGS, THE ADOT TRAFFIC ENGINEERING MANUAL OF APPROVED SIGNS, THESE PLANS, AND THE SPECIAL PROVISIONS.
2. SIGNING MAY BE MODIFIED AS DIRECTED BY THE ENGINEER. THE ENGINEER MAY SHIFT THE LOCATION OF A SIGN TO A MORE FAVORABLE LOCATION IN ACCORDANCE WITH THE STANDARD DRAWINGS.
3. SHOP DRAWINGS OF THE SIGN PANELS ARE NOT REQUIRED.
4. NORMAL OFFSET FOR ALL SIGNS SHALL BE 12 FEET FROM THE NEAR EDGE OF THE SIGN TO THE EDGE OF THE PAVEMENT UNLESS OTHERWISE NOTED ON THE SIGNING SUMMARY SHEET, ON THE PLANS, OR AS DIRECTED BY THE ENGINEER.
5. ALL SIGN LOCATIONS AND POST LENGTHS ARE APPROXIMATE. THE CONTRACTOR SHALL VERIFY ACTUAL SIGN LOCATIONS WITH THE ENGINEER PRIOR TO CONSTRUCTING THE FOUNDATIONS FOR THE SIGN SUPPORTS. THE CONTRACTOR SHALL VERIFY ACTUAL POST LENGTHS AFTER FINAL GRADING.
6. NORMAL MOUNTING HEIGHT FOR THE BOTTOM OF THE LOWEST SIGN ON THE POST SHALL BE SEVEN FEET ABOVE THE NEAREST SHOULDER EDGE OR TOP OF CURB ELEVATION. THE BOTTOM OF THE SIGN SHALL BE AT LEAST 7 FEET ABOVE THE GROUND UNDER THE SIGN.
7. THE CONTRACTOR SHALL REMOVE EXISTING SIGNING WHERE INDICATED ON THE PLAN SHEET. FOUNDATIONS OF EXISTING SIGNS THAT ARE TO BE REMOVED OR RELOCATED SHALL BE REMOVED A MINIMUM OF 2 FEET BELOW FINISHED GRADE.
8. THE CONTRACTOR SHALL INVENTORY ALL SIGNS TO REMAIN OR BE RELOCATED, AND NOTE DAMAGED SIGNS TO THE ENGINEER BEFORE CONSTRUCTION BEGINS. ALL SIGNS SUBSEQUENTLY DAMAGED SHALL BE REPLACED BY THE CONTRACTOR AT NO COST TO THE DEPARTMENT.
9. ALL NEW SIGNS SHALL BE INSTALLED ON NEW SQUARE TUBE POSTS WITH FOUNDATIONS AS INDICATED IN STD DWGS S-1 AND S-3.
10. ALL METAL HARDWARE SHALL BE STAINLESS STEEL, GALVANIZED CADMIUM PLATED OR ALUMINUM TO PREVENT RUST.
11. ALL SIGNS SHALL BE FABRICATED OF FLAT SHEET ALUMINUM PANELS WITH DIRECT APPLIED OR SILK SCREENED COPY PER SECTIONS 608-2.07 AND 608-2.09 OF THE SPECIFICATIONS. ALL SIGNS SHALL MEET THE CRITERIA ESTABLISHED FOR TYPE IX OR XI SHEETING.
12. QUANTITIES ARE APPROXIMATE AND FOR THE CONTRACTOR'S INFORMATION ONLY.
13. ALL DIMENSIONS ARE IN FEET, UNLESS OTHERWISE NOTED.

SIGNING LEGEND:

⊢●	SIGN
⊢	EXISTING SIGN

APPROXIMATE SIGNING QUANTITIES

ITEM DESCRIPTION		UNIT	QUANTITY	ITEM NO.
REGULATORY, WARNING OR MARKER SIGN PANEL	TYPE IX OR XI	SQ FT	64	6080005
PERFORATED SIGN POST	2 S	LF	88	6070054
PERFORATED SIGN POST FOUNDATION	CONCRETE	EACH	8	6070060

	NAME	DATE
DESIGN	SMG	06/14
DRAWN	CPG	06/14
CHECKED	GPF	06/14

PARSONS BRINCKERHOFF

ARIZONA DEPARTMENT OF TRANSPORTATION
INTERMODAL TRANSPORTATION DIVISION
ROADWAY DESIGN SECTION

SIGNING PLAN
GENERAL NOTES

Registered Professional Engineer (Civil) CERTIFICATE NO. 49450 GREGORY PATRICK FLY ARIZONA U.S.A. Expires 3/31/2015

ROUTE | LOCATION PRESCOTT VALLEY PIPELINE & CENTRAL CORE MULTI-USE PATHS (PIPELINE PHASE 2)

DWG NO. T2 - 1.01

TRACS NO. SL680 01C | TEA-PRV-0(205)T | ____ OF ____

SURVEY NO. | FINISHED PLANS- | REVISIONS- | LOCATION- | DATE-

F.H.W.A. REGION	STATE	PROJECT NO.	SHEET NO.	TOTAL SHEETS	AS BUILT
9	ARIZ.	TEA-PRV-0(205)T			
		PRV 0000 YV			

Plan Sht No.	Sign Number	MOAS Sign Code	Work: New	Work: Existing: Replace Panel	Work: Existing: Relocate Panel	Work: Existing: Modify Legend	Work: Existing: Remove	Work: Existing: To Remain	Offset (ft)	Mounting Height (ft)	Background Color	Panel: Legend	Panel: Width (in.)	Panel: Height (in.)	Panel: Area (sq. ft.)	Panel: Type	Panel: Bid Item Number	Ground Mounted: Foundations	Ground Mounted: Posts: Type	Ground Mounted: Posts: Total length (ft)	Ground Mounted: New Slipbases	Ground Mounted: Stringer: Type	Ground Mounted: Stringer: Total Length (ft)	Overhead: Structure Type	Overhead: Number of Lights	Remarks
C2-2.01	1	R5-3	X							7	WH	NO MOTOR VEHICLES	24	24	4	RWM	6080005	1	2S	11						BACK TO BACK, SEE DETAIL J
	2	R1-2	X								WH	YIELD	18	15.6	1	RWM	6080005									MANLEY DR
C2-2.01	3	W11-15	X							7	YL	TRAIL CROSSING	30	30	7	RWM	6080005	1	2S	11						SEE DETAIL J, MANLEY DR
	4	W11-15P	X								YL	TRAIL CROSSING (PLAQUE)	24	12	2	RWM	6080005									
	5	W16-7P	X								YL	DOWNWARD DIRECTIONAL ARROW	24	12	2	RWM	6080005									
C2-2.01	6	R5-3	X							7	WH	NO MOTOR VEHICLES	24	24	4	RWM	6080005	1	2S	11						BACK TO BACK, SEE DETAIL J
	7	R1-2	X								WH	YIELD	18	15.6	1	RWM	6080005									MANLEY DR
C2-2.01	8	W11-15	X							7	YL	TRAIL CROSSING	30	30	7	RWM	6080005	1	2S	11						SEE DETAIL J, MANLEY DR
	9	W11-15P	X								YL	TRAIL CROSSING (PLAQUE)	24	12	2	RWM	6080005									
	10	W16-7P	X								YL	DOWNWARD DIRECTIONAL ARROW	24	12	2	RWM	6080005									
C2-2.07	1	R5-3	X							7	WH	NO MOTOR VEHICLES	24	24	4	RWM	6080005	1	2S	11						BACK TO BACK, SEE DETAIL J
	2	R1-2	X								WH	YIELD	18	15.6	1	RWM	6080005									LONG MESA DR
C2-2.07	3	W11-15	X							7	YL	TRAIL CROSSING	30	30	7	RWM	6080005	1	2S	11						SEE DETAIL J, LONG MESA DR
	4	W11-15P	X								YL	TRAIL CROSSING (PLAQUE)	24	12	2	RWM	6080005									
	5	W16-7P	X								YL	DOWNWARD DIRECTIONAL ARROW	24	12	2	RWM	6080005									
C2-2.07	6	R5-3	X							7	WH	NO MOTOR VEHICLES	24	24	4	RWM	6080005	1	2S	11						BACK TO BACK, SEE DETAIL J
	7	R1-2	X								WH	YIELD	18	15.6	1	RWM	6080005									LONG MESA DR
C2-2.07	8	W11-15	X							7	YL	TRAIL CROSSING	30	30	7	RWM	6080005	1	2S	11						SEE DETAIL J, LONG MESA DR
	9	W11-15P	X								YL	TRAIL CROSSING (PLAQUE)	24	12	2	RWM	6080005									
	10	W16-7P	X								YL	DOWNWARD DIRECTIONAL ARROW	24	12	2	RWM	6080005									

Notes:

1. The Engineer shall verify post lengths and elevations.
2. The Engineer may shift a sign in order to achieve a more desirable location.
3. Quantities are approximate and for the contractor's information only.

Panel Types:

RWM: Regulatory, Warning or Marker
F-DA: Flat-sheet aluminum with direct applied or silk-screened characters
F-Dem: Flat-sheet aluminum with demountable characters
Ext: Aluminum extrusions

Sheeting Type:
See Special Provisions Section 1007

Stringer Types:
P:Square-tube post
T:T-Section

Post Types:
2S-2" Single
2T-2" Telescoping
2 1/2S-2½" Single
2 1/2T-2½" Telescoping

	NAME	DATE
DESIGN	JKF	06/14
DRAWN	CPG	06/14
CHECKED	GPF	06/14

PARSONS BRINCKERHOFF

ARIZONA DEPARTMENT OF TRANSPORTATION
INTERMODAL TRANSPORTATION DIVISION

SIGN SUMMARY SHEET

ROUTE | LOCATION: PRESCOTT VALLEY PIPELINE & CENTRAL CORE MULTI-USE PATHS (PIPELINE PHASE 2)

Registered Professional Engineer (Civil) CERTIFICATE NO. 49430 GREGORY PATRICK FLY ARIZONA U.S.A. Expires 3/31/2015

DWG NO. T2-2.01

TRACS NO. SL680 01C | TEA-PRV-0(205)T | ___ OF ___

$DATE$ 9/12/2014 I:\Prescott_MUP\SL641_ph2\Pvmk-Sign-MUT\SL641_ssum01.dgn

F.H.W.A. REGION	STATE	PROJECT NO.	SHEET NO.	TOTAL SHEETS	AS BUILT
9	ARIZ.	TEA-PRV-0(205)T			
		PRV 0000 YV			

TRAFFIC CONTROL GENERAL NOTES:

1. THE TRAFFIC CONTROL PLANS REPRESENT A SUGGESTED METHOD FOR TRAFFIC CONTROL DURING CONSTRUCTION. THE CONTRACTOR SHALL PREPARE TRAFFIC CONTROL PLANS IN ACCORDANCE WITH SECTION 701 OF THE SPECIFICATIONS. ALL TRAFFIC CONTROL PLANS ARE SUBJECT TO THE APPROVAL OF THE ENGINEER BEFORE BEGINNING CONSTRUCTION.
2. ADJUSTMENTS TO THE DETAILS PROVIDED OF THESE TRAFFIC CONTROL PLANS AND REQUIREMENTS MAY BE NECESSARY DUE TO CONSTRUCTION ACTIVITIES, AS DIRECTED BY THE ENGINEER.
3. THE CONTRACTOR SHALL MAINTAIN TWO-WAY TRAFFIC ON ALL STREETS AT ALL TIMES OR AS DIRECTED BY THE ENGINEER.
4. THE CONTRACTOR SHALL MAINTAIN ACCESS TO ALL LOCAL BUSINESSES.
5. THE CONTRACTOR SHALL MAINTAIN TRAFFIC ON A PAVED SURFACE AT ALL TIMES.
6. ALL EXISTING REGULATORY, WARNING AND MARKING SIGNS IN CONFLICT WITH THE TRAFFIC CONTROL SIGNS SHALL BE REMOVED, RELOCATED OR COVERED IN PLACE, AS DIRECTED BY THE ENGINEER. THE CONTRACTOR SHALL STORE AND REINSTALL ITEMS WHICH HAVE BEEN REMOVED OR RELOCATED IN A MANNER APPROVED BY THE ENGINEER AT NO ADDITIONAL COST TO THE DEPARTMENT.
7. SPEED LIMIT SIGNING IS PRELIMINARY AND IS SUBJECT TO REVIEW AND CHANGE BY THE ENGINEER AS DICTATED BY FIELD CONDITIONS.
8. USE DOUBLE FINES SIGNING WHEN WORKERS ARE PRESENT. SEE FIGURE SA-12 OF THE ADOT TRAFFIC CONTROL DESIGN GUIDELINES 2010.
9. THE RETROREFLECTIVE SHEETING ON ALL CONSTRUCTION SIGNS SHALL MEET THE MINIMUM CRITERIA ESTABLISHED IN SECTION 1007 OF THE SPECIFICATIONS.
10. ALL CONSTRUCTION SIGNS SHALL HAVE BLACK LETTERS ON AN ORANGE BACKGROUND.
11. CONSTRUCTION SIGNS SHALL NOT BE DISPLAYED TO TRAFFIC MORE THAN 24 HOURS PRIOR TO THE ACTUAL START OF CONSTRUCTION. THESE SIGNS MAY BE INSTALLED SOONER BUT THEY MUST BE COVERED OR TURNED AWAY FROM TRAFFIC. THE COST FOR COVERING OR TURNING THEM SHALL BE CONSIDERED PART OF THE SIGN INSTALLATION COST. NO FURTHER COMPENSATION WILL BE MADE. THESE SIGNS SHALL BE REMOVED WITHIN 24 HOURS AFTER COMPLETION OF THE CONSTRUCTION ACTIVITIES.
12. WHEN TRAFFIC CONTROL DEVICES ARE NOT IN USE, THEY SHALL BE MOVED AT LEAST 30 FEET FROM THE ROADWAY, IF POSSIBLE. OTHERWISE THEY SHALL BE COVERED OR TURNED AWAY FROM TRAFFIC.
13. DRUMS, TYPE II BARRICADES AND VERTICAL PANELS SHALL BE PLACED 20 FEET ON CENTER IN TAPERS AND 40 FEET ON CENTER IN TANGENTS.
14. THE CONTRACTOR MAY SUBSTITUTE TYPE I BARRICADES FOR TYPE II BARRICADES AS LONG AS THE REFLECTIVE AREA ON THE TOP PANEL OF THE TYPE I BARRICADE IS EQUIVALENT OR GREATER THAN THE REFLECTIVE AREA OF A TYPE II BARRICADE.
15. FOR TRAFFIC CONTROL LEFT IN PLACE OVER NIGHT, A TYPE C STEADY-BURNING YELLOW LIGHT SHALL BE MOUNTED ON EVERY DRUM, TYPE II BARRICADE, AND VERTICAL PANEL IN TAPERS; AND ON ALTERNATING DRUMS, TYPE II BARRICADES, OR VERTICAL PANELS IN TANGENTS.
16. DURING NIGHTTIME THE CONTRACTOR SHALL NOT UTILIZE CONES FOR CHANNELIZATION DEVICES UNLESS OTHERWISE DIRECTED BY THE ENGINEER.

DESIGN REFERENCES:

MUTCD - MANUAL ON UNIFORM TRAFFIC CONTROL DEVICES PART 6, TEMPORARY TRAFFIC CONTROL, 2009 EDITION AS AMENDED BY THE JANUARY, 2012 ADOT SUPPLEMENT.

TCDG - ADOT TRAFFIC CONTROL DESIGN GUIDELINES, 2010.

	NAME	DATE
DESIGN	SMG	06/14
DRAWN	CPG	06/14
CHECKED	GPF	06/14

PARSONS BRINCKERHOFF

ARIZONA DEPARTMENT OF TRANSPORTATION
INTERMODAL TRANSPORTATION DIVISION
ROADWAY DESIGN SECTION

TRAFFIC CONTROL
GENERAL NOTES

ROUTE | LOCATION PRESCOTT VALLEY PIPELINE & CENTRAL CORE MULTI-USE PATHS (PIPELINE PHASE 2)

Registered Professional Engineer (Civil) CERTIFICATE NO. 49450 GREGORY PATRICK FLY ARIZONA U.S.A.
Expires 3/31/2015

DWG NO. T2 - 3.01

TRACS NO. SL680 01C | TEA-PRV-0(205)T | ____ OF ____

F.H.W.A. REGION	STATE	PROJECT NO.	SHEET NO.	TOTAL SHEETS	AS BUILT
9	ARIZ.	TEA-PRV-0(205)T			
		PRV 0000 YV			

APPROXIMATE TRAFFIC CONTROL QUANTITIES

ITEM NO.	BID ITEM DESCRIPTION	UNITS	CONSTRUCTION ACTIVITIES				
			PHASE 1	PHASE 2	PHASE 3A	PHASE 3B	TOTALS
	DURATION (CALENDAR DAYS)	DAYS	70	50	20	20	70
7016030	BARRICADE (VERTICAL PANELS, TYPE II)	EACH-DAY	0	0	500	500	1,000
7016032	PORTABLE SIGN STANDS (RIGID)	EACH-DAY	840	0	40	40	920
7016037	WARNING LIGHTS (TYPE C)	EACH-DAY	0	0	500	500	1,000
7016051	TEMPORARY SIGN (LESS THAN 10 S.F.)	EACH-DAY	840	0	40	40	920

	NAME	DATE
DESIGN	SMG	06/14
DRAWN	CPG	06/14
CHECKED	GPF	06/14

PARSONS BRINCKERHOFF

ARIZONA DEPARTMENT OF TRANSPORTATION
INTERMODAL TRANSPORTATION DIVISION
ROADWAY DESIGN SECTION

TRAFFIC CONTROL PLAN
APPROXIMATE QUANTITIES

Registered Professional Engineer (Civil) CERTIFICATE NO. 49430 GREGORY PATRICK FLY ARIZONA U.S.A.
Expires 3/31/2015

ROUTE | LOCATION PRESCOTT VALLEY PIPELINE & CENTRAL CORE MULTI-USE PATHS (PIPELINE PHASE 2)

DWG NO. T2-3.03

TRACS NO. SL680 01C | TEA-PRV-0(205)T | ____ OF ____

DATE- | LOCATION- | REVISIONS- | FINISHED PLANS- | SURVEY NO.

F.H.W.A. REGION	STATE	PROJECT NO.	SHEET NO.	TOTAL SHEETS	AS BUILT
9	ARIZ.	TEA-PRV-0(205)T			
		PRV 0000 YV			

MAINTENANCE OF TRAFFIC

ACTIVITY NO	CONSTRUCTION ACTIVITY	TRAFFIC CONTROL	COMMENTS
1	PHASE 1 ESTABLISH WORK ZONE AT CROSSROADS ADVANCE SIGNING	OPERATION PER MUTCD TYPICAL APPLICATION 1 (TA-1). SETUP PER TA-1 IN EACH TRAVEL DIRECTION IN ADVANCE OF ROADWAY CROSSINGS AND WORK ZONES.	SIGNS ARE TO REMAIN IN PLACE FOR THE DURATION OF THE PIPELINE PHASE 2 PROJECT.
2	PHASE 2 CONSTRUCT MULTI-USE PATH NOT ADJACENT TO EXISTING ROADWAYS	WORK PERFORMED IS NOT LOCATED NEAR EXISTING ROADWAYS. NO ADDITIONAL TRAFFIC CONTROL IS REQUIRED. TRAFFIC CONTROL FOR ACTIVITY 2 IS THE SAME AS PROVIDED UNDER ACTIVITY 1.	WORK SHALL BE COMPLETED FROM 7A TO 7P, MONDAY THRU FRIDAY ONLY. NO NIGHT WORK IS PERMITTED.
3	PHASE 3A CONSTRUCT MULTI-USE PATH INSTALL SIGNAGE AT MANLEY DR	OPERATION PER MUTCD TYPICAL APPLICATION 1 (TA-1) OR 6 (TA-6). SETUP PER TA-1 OR TA-6 IN EACH TRAVEL DIRECTION IN ADVANCE OF ROADWAY CROSSINGS AND WORK ZONES.	WORK SHALL BE COMPLETED FROM 7A TO 7P, MONDAY THRU FRIDAY ONLY. NO NIGHT WORK IS PERMITTED.
	PHASE 3B CONSTRUCT MULTI-USE PATH INSTALL SIGNAGE AT LONG MESA DR	OPERATION PER MUTCD TYPICAL APPLICATION 1 (TA-1) OR 6 (TA-6). SETUP PER TA-1 OR TA-6 IN EACH TRAVEL DIRECTION IN ADVANCE OF ROADWAY CROSSINGS AND WORK ZONES.	WORK SHALL BE COMPLETED FROM 7A TO 7P, MONDAY THRU FRIDAY ONLY. NO NIGHT WORK IS PERMITTED.

NOTE:

THE ORDER OF CONSTRUCTION ACTIVITIES DOES NOT CONSTITUTE A SEQUENCE OF CONSTRUCTION. THE CONTRACTOR SHALL PERFORM THE WORK IN THE MOST EXPEDITIOUS MANNER CONSISTENT WITH THE PLANS AND SPECIAL PROVISIONS WITH THE APPROVAL OF THE ENGINEER. ANY MODIFICATIONS TO THE ORDER OF CONSTRUCTION ACTIVITIES SHALL REQUIRE REVIEW AND APPROVAL BY THE ENGINEER.

	NAME	DATE
DESIGN	SMG	06/14
DRAWN	CPG	06/14
CHECKED	GPF	06/14

PARSONS BRINCKERHOFF

ARIZONA DEPARTMENT OF TRANSPORTATION
INTERMODAL TRANSPORTATION DIVISION
ROADWAY DESIGN SECTION

TRAFFIC CONTROL PLAN
MAINTENANCE OF TRAFFIC

Registered Professional Engineer (Civil) CERTIFICATE NO. 49430 GREGORY PATRICK FLY ARIZONA U.S.A.
Expires 3/31/2015

ROUTE | LOCATION PRESCOTT VALLEY PIPELINE & CENTRAL CORE MULTI-USE PATHS (PIPELINE PHASE 2)

DWG NO. T2 - 3.02

TRACS NO. SL680 01C | TEA-PRV-0(205)T | ____ OF ____

SURVEY NO. | FINISHED PLANS- | REVISIONS- | LOCATION- | DATE-

F.H.W.A. REGION	STATE	PROJECT NO.	SHEET NO.	TOTAL SHEETS	AS BUILT
9	ARIZ.	TEA-PRV-0(205)T			
		PRV 0000 YV			

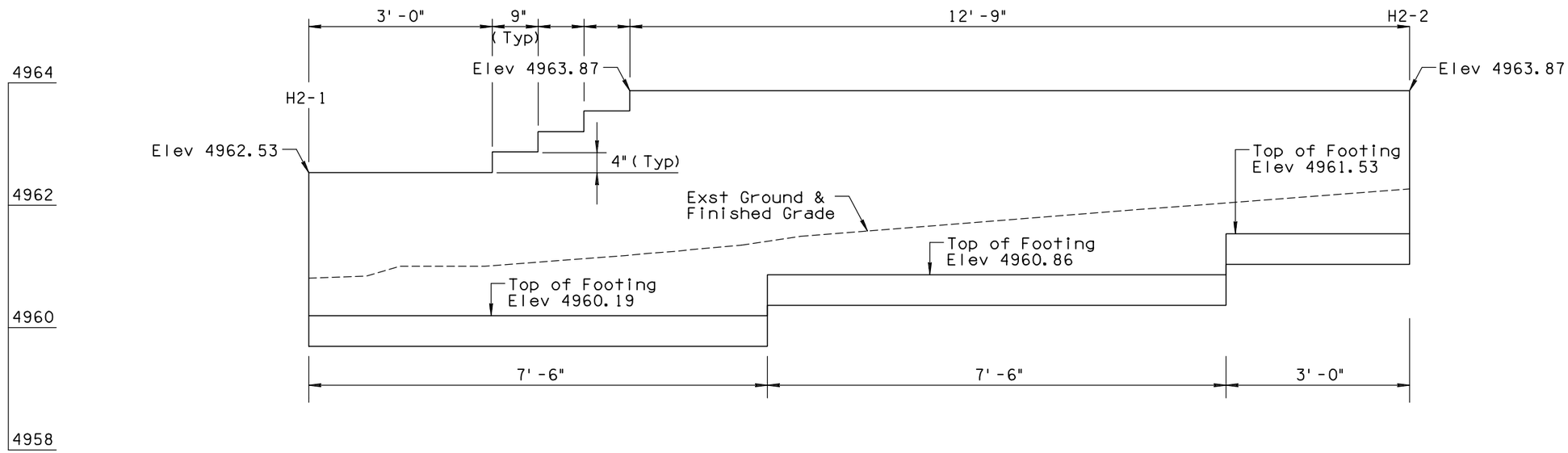

WALL H2

Scale: 1"=1'
Length: 18'-0"
Area: 51.68 sq ft

NOTE:

1. See Detail H for Horizontal Control.
2. See Detail X for Additional Wall Information.
3. Minimum 1 foot of cover over the Wall Footing.

	NAME	DATE
DESIGN	SMG	06/14
DRAWN	CPG	06/14
CHECKED	GPF	06/14

PARSONS BRINCKERHOFF

ARIZONA DEPARTMENT OF TRANSPORTATION
INTERMODAL TRANSPORTATION DIVISION
ROADWAY DESIGN SECTION

RETAINING WALLS

Registered Professional Engineer (Civil) CERTIFICATE NO. 49430 GREGORY PATRICK FLY ARIZONA U.S.A.
Expires 3/31/2015

ROUTE | LOCATION PRESCOTT VALLEY PIPELINE & CENTRAL CORE MULTI-USE PATHS (PIPELINE PHASE 2)

DWG NO. S2-1.01

TRACS NO. SL680 01C | TEA-PRV-0(205)T | ____ OF ____

DATE- LOCATION- REVISIONS- FINISHED PLANS- SURVEY NO.

F.H.W.A. REGION	STATE	PROJECT NO.	SHEET NO.	TOTAL SHEETS	AS BUILT
9	ARIZ.	TEA-PRV-0(205)T			
		PRV 0000 YV			

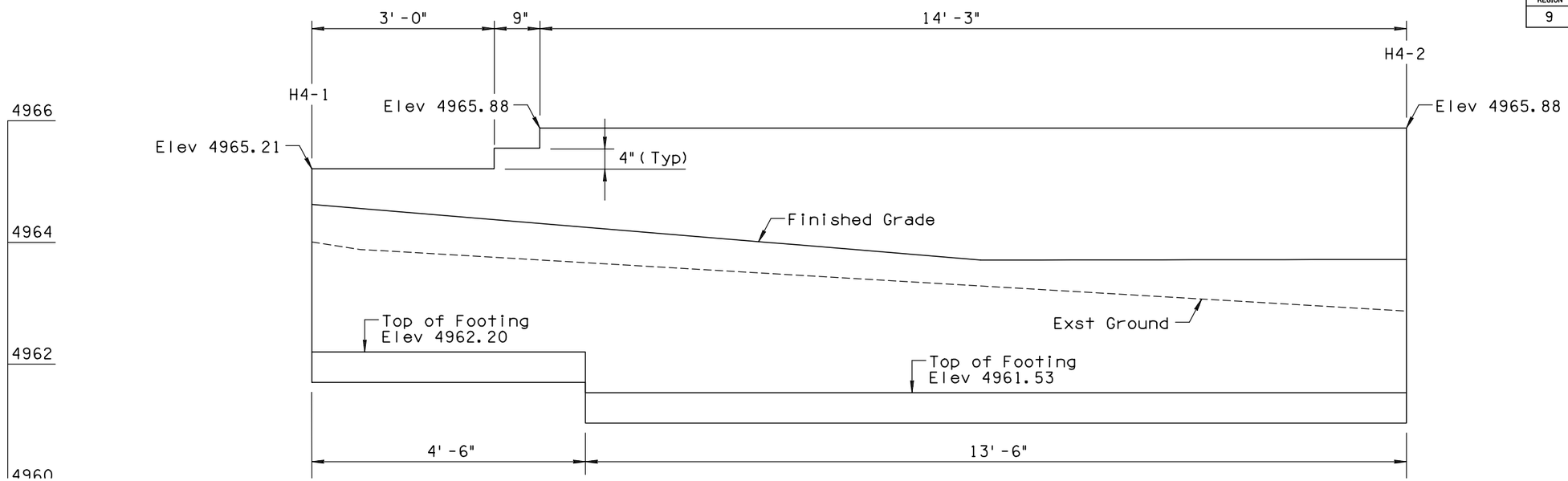

WALL H4

Scale: 1"=1'
Length: 18'-0"
Area: 73.03 sq ft

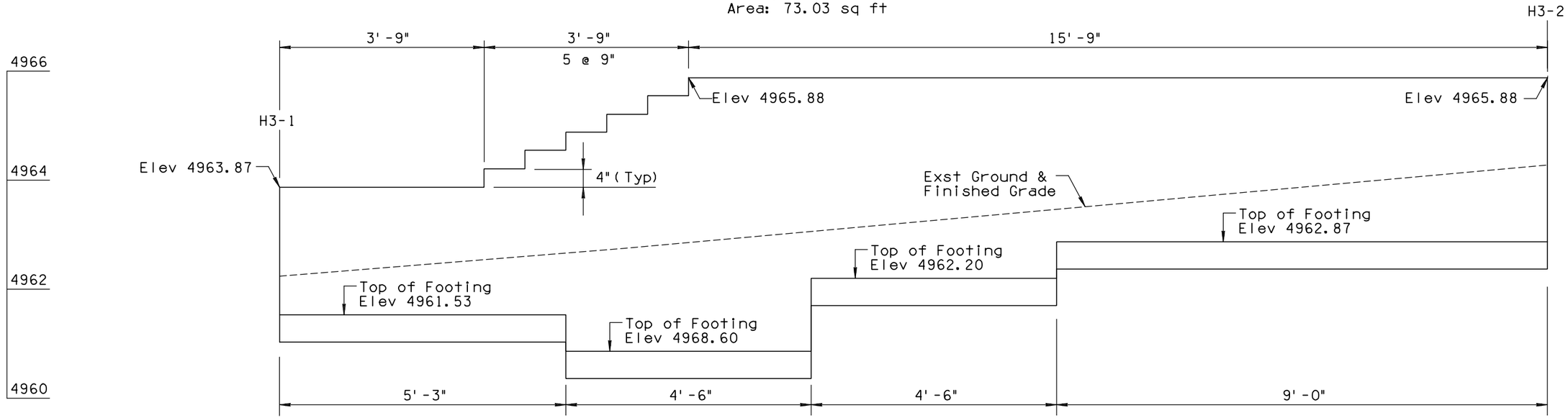

NOTE:

1. See Detail H for Horizontal Control.
2. See Detail X for Additional Wall Information.
3. Minimum 1 foot of cover over the Wall Footing.

WALL H3

Scale: 1"=1'
Length: 23'-3"
Area: 77.79 sq ft

	NAME	DATE
DESIGN	SMG	06/14
DRAWN	CPG	06/14
CHECKED	GPF	06/14

PARSONS BRINCKERHOFF

ARIZONA DEPARTMENT OF TRANSPORTATION
INTERMODAL TRANSPORTATION DIVISION
ROADWAY DESIGN SECTION

RETAINING WALLS

ROUTE | LOCATION PRESCOTT VALLEY PIPELINE & CENTRAL CORE MULTI-USE PATHS (PIPELINE PHASE 2)

Registered Professional Engineer (Civil) CERTIFICATE NO. 49450 GREGORY PATRICK FLY ARIZONA U.S.A.
Expires 3/31/2015

DWG NO. S2-1.02

TRACS NO. SL680 01C | TEA-PRV-0(205)T | ___ OF ___

DATE- LOCATION- REVISIONS- FINISHED PLANS- SURVEY NO.

9/12/2014 T:\Prescott_MUP\SL641_ph2\Structures\SL641_wpln02.dgn

F.H.W.A. REGION	STATE	PROJECT NO.	SHEET NO.	TOTAL SHEETS	AS BUILT
9	ARIZ.	TEA-PRV-0(205)T			
		PRV 0000 YV			

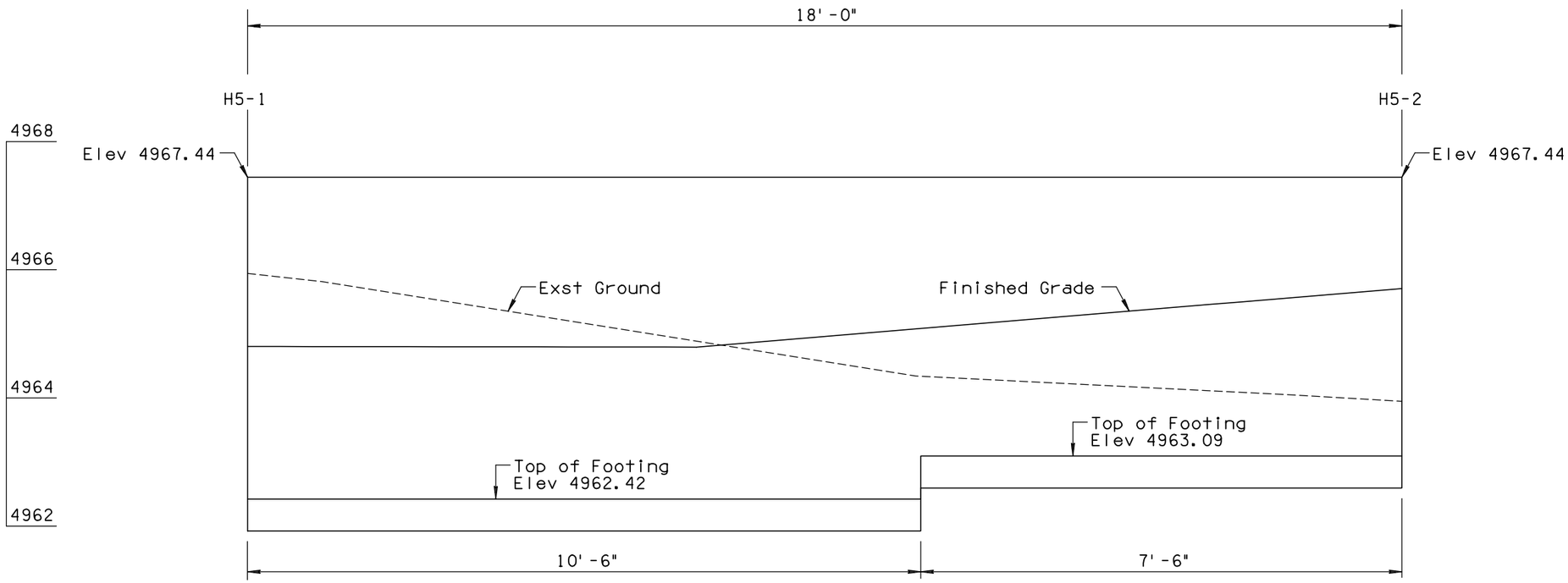

WALL H5

Scale: 1"=1'
Length: 18'-0"
Area: 85.33 sq ft

NOTE:

1. See Detail H for Horizontal Control.
2. See Detail X for Additional Wall Information.
3. Minimum 1 foot of cover over the Wall Footing.

	NAME	DATE
DESIGN	SMG	06/14
DRAWN	CPG	06/14
CHECKED	GPF	06/14

PARSONS BRINCKERHOFF

ARIZONA DEPARTMENT OF TRANSPORTATION
INTERMODAL TRANSPORTATION DIVISION
ROADWAY DESIGN SECTION

RETAINING WALLS

ROUTE | LOCATION PRESCOTT VALLEY PIPELINE & CENTRAL CORE MULTI-USE PATHS (PIPELINE PHASE 2)

Registered Professional Engineer (Civil) CERTIFICATE 49430 GREGORY PATRICK FLY ARIZONA U.S.A.
Expires 3/31/2015

DWG NO. S2-1.03

TRACS NO. SL680 01C | TEA-PRV-0(205)T | ___ OF ___

DATE- LOCATION- REVISIONS- FINISHED PLANS- SURVEY NO.

F.H.W.A. REGION	STATE	PROJECT NO.	SHEET NO.	TOTAL SHEETS	AS BUILT
9	ARIZ.	TEA-PRV-0(205)T			
		PRV 0000 YV			

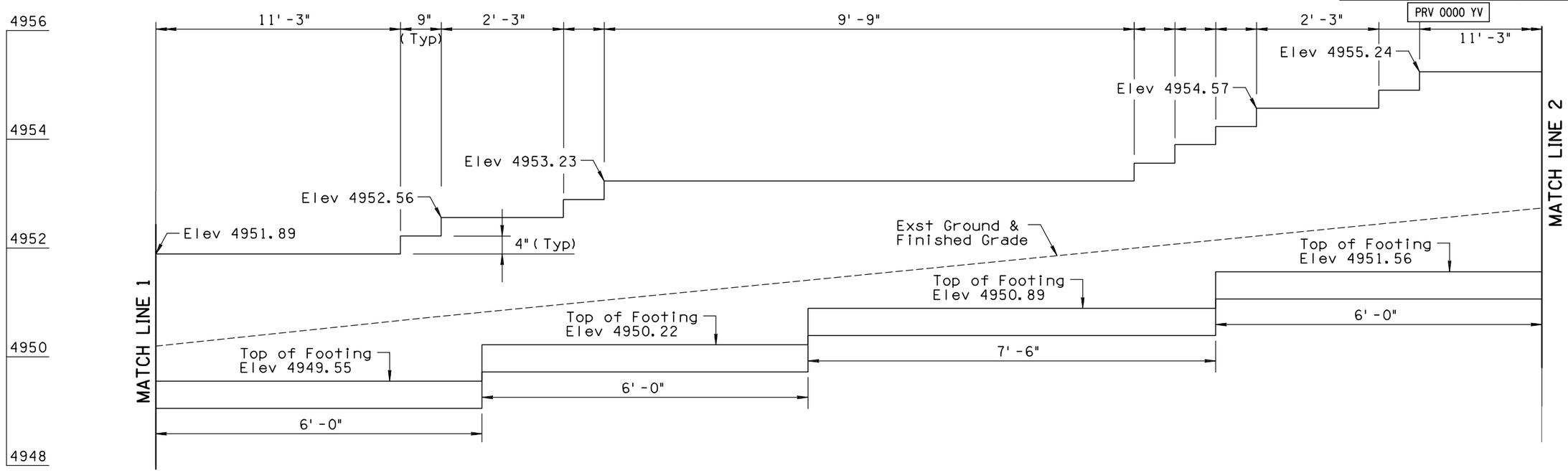

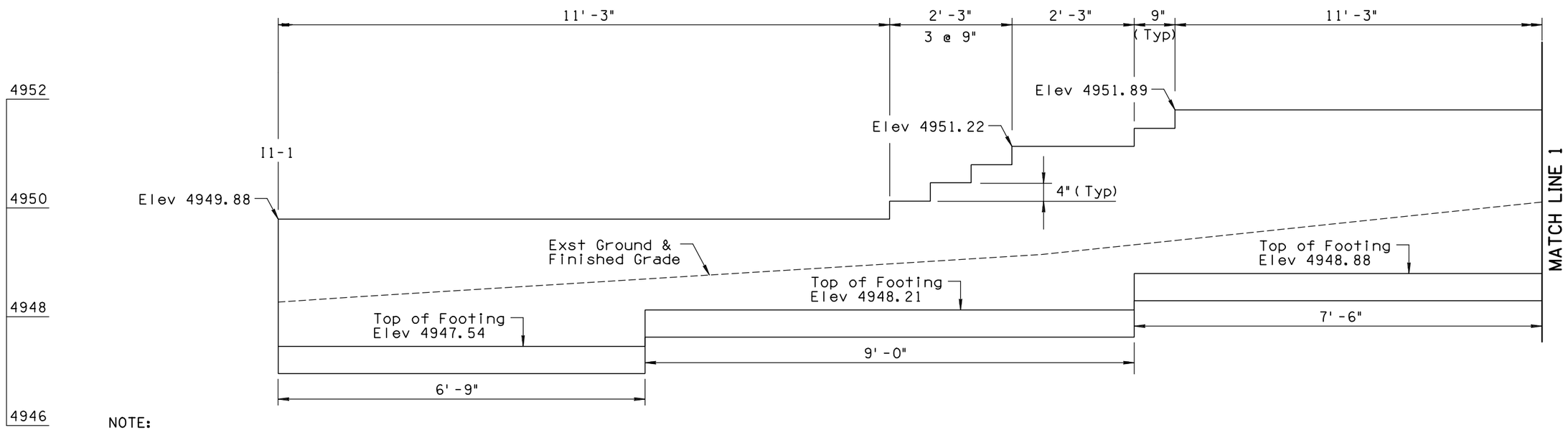

NOTE:

1. See Detail I for Horizontal Control.
2. See Detail X for Additional Wall Information.
3. Minimum 1 foot of cover over the Wall Footing.

WALL I1

Scale: 1" = 1'
Length: 168' -9"

	NAME	DATE
DESIGN	SMG	06/14
DRAWN	CPG	06/14
CHECKED	GPF	06/14

PARSONS BRINCKERHOFF

ARIZONA DEPARTMENT OF TRANSPORTATION
INTERMODAL TRANSPORTATION DIVISION
ROADWAY DESIGN SECTION

RETAINING WALLS

ROUTE | LOCATION PRESCOTT VALLEY PIPELINE & CENTRAL CORE MULTI-USE PATHS (PIPELINE PHASE 2)

Registered Professional Engineer (Civil) CERTIFICATE NO. 49430 GREGORY PATRICK FLY ARIZONA U.S.A.
Expires 3/31/2015

DWG NO. S2-1.04

TRACS NO. SL680 01C | TEA-PRV-0(205)T | ___ OF ___

DATE- LOCATION- REVISIONS- FINISHED PLANS- SURVEY NO.

9/12/2014 T:\Prescott_MUP\SL641_ph2\Structures\SL641_wpln04.dgn

F.H.W.A. REGION	STATE	PROJECT NO.	SHEET NO.	TOTAL SHEETS	AS BUILT
9	ARIZ.	TEA-PRV-0(205)T			
		PRV 0000 YV			

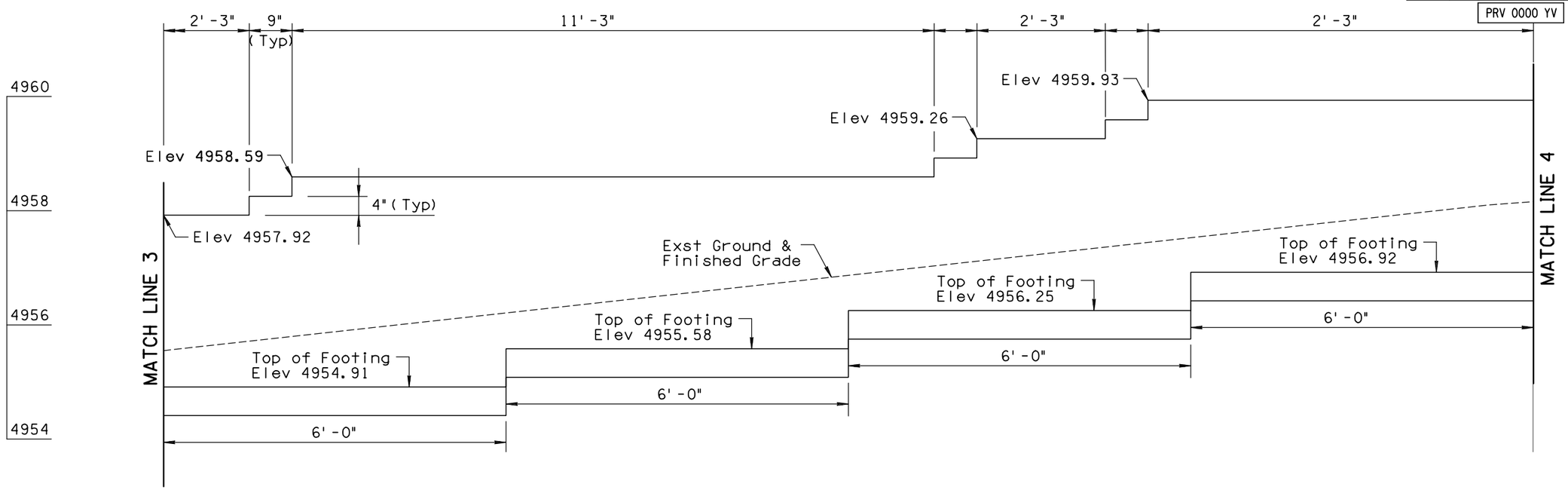

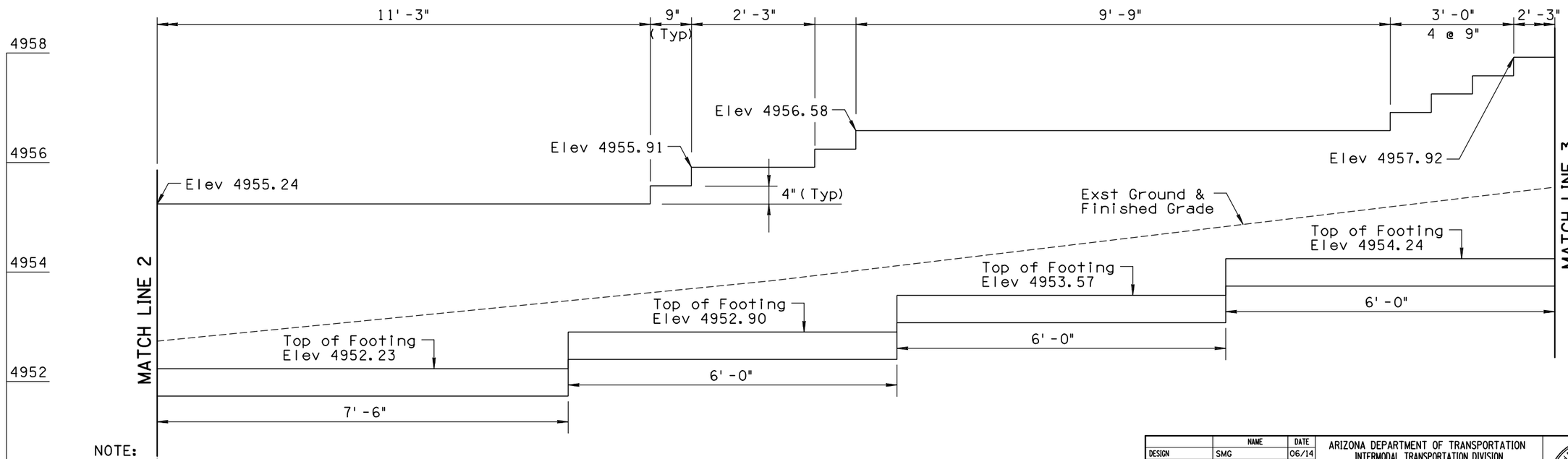

NOTE:

1. See Detail I for Horizontal Control.
2. See Detail X for Additional Wall Information.
3. Minimum 1 foot of cover over the Wall Footing.

WALL I1

Scale: 1" = 1'
Length: 168' -9"

	NAME	DATE
DESIGN	SMG	06/14
DRAWN	CPG	06/14
CHECKED	GPF	06/14

PARSONS BRINCKERHOFF

ARIZONA DEPARTMENT OF TRANSPORTATION
INTERMODAL TRANSPORTATION DIVISION
ROADWAY DESIGN SECTION

RETAINING WALLS

ROUTE | LOCATION PRESCOTT VALLEY PIPELINE & CENTRAL CORE MULTI-USE PATHS (PIPELINE PHASE 2)

Registered Professional Engineer (Civil) CERTIFICATE NO. 49430 GREGORY PATRICK FLY ARIZONA U.S.A.
Expires 3/31/2015

DWG NO. S2-1.05

TRACS NO. SL680 01C | TEA-PRV-0(205)T | ___ OF ___

DATE- LOCATION- REVISIONS- FINISHED PLANS- SURVEY NO.

9/12/2014 T:\Prescott_MUP\SL641_ph2\Structures\SL641_wpln05.dgn

F.H.W.A. REGION	STATE	PROJECT NO.	SHEET NO.	TOTAL SHEETS	AS BUILT
9	ARIZ.	TEA-PRV-0(205)T			
		PRV 0000 YV			

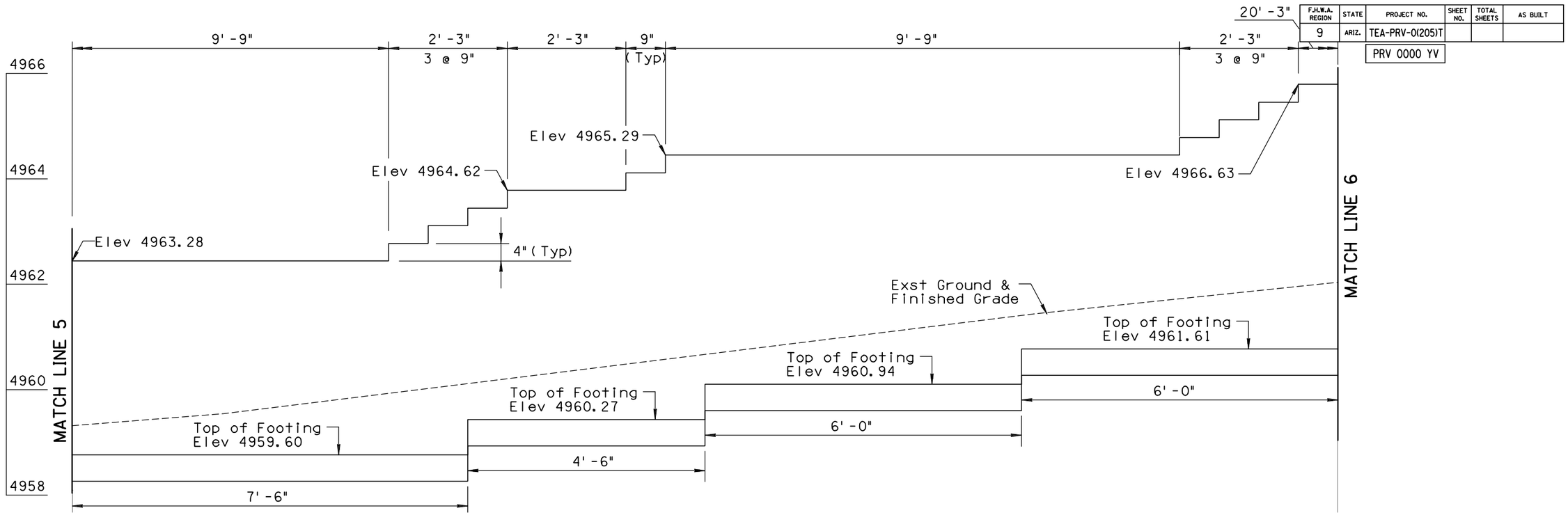

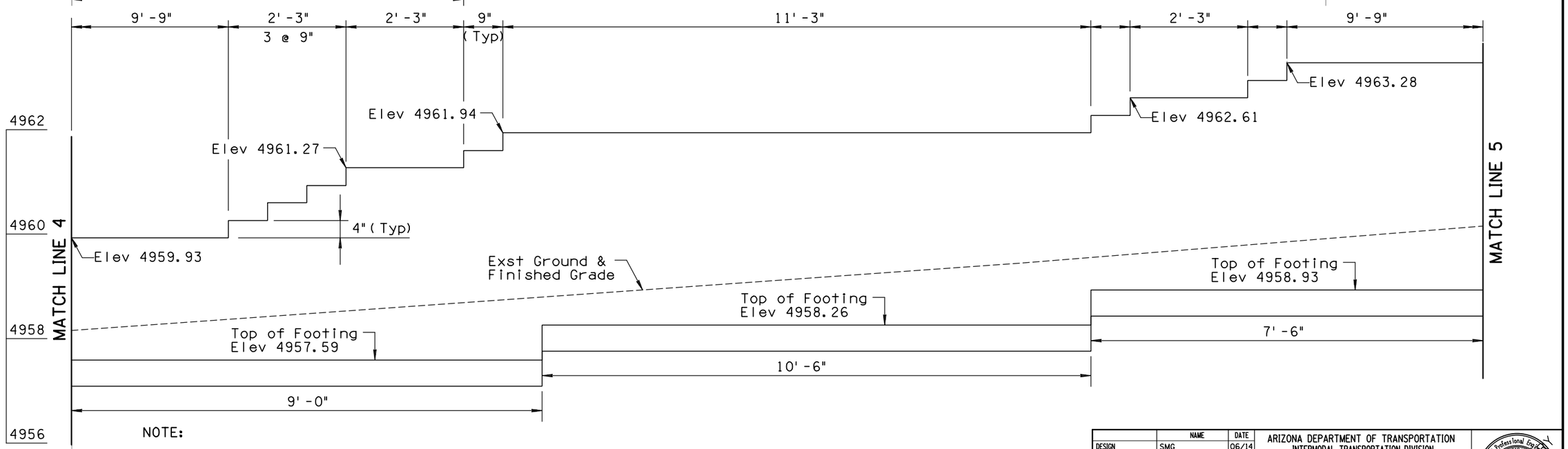

NOTE:

1. See Detail I for Horizontal Control.
2. See Detail X for Additional Wall Information.
3. Minimum 1 foot of cover over the Wall Footing.

WALL I1

Scale: 1" = 1'
Length: 168' -9"

	NAME	DATE
DESIGN	SMG	06/14
DRAWN	CPG	06/14
CHECKED	GPF	06/14

PARSONS BRINCKERHOFF

ARIZONA DEPARTMENT OF TRANSPORTATION
INTERMODAL TRANSPORTATION DIVISION
ROADWAY DESIGN SECTION

RETAINING WALLS

ROUTE | LOCATION: PRESCOTT VALLEY PIPELINE & CENTRAL CORE MULTI-USE PATHS (PIPELINE PHASE 2)

Registered Professional Engineer (Civil) CERTIFICATE NO. 49430 GREGORY PATRICK FLY ARIZONA U.S.A.
Expires 3/31/2015

DWG NO. S-1.06

TRACS NO. SL680 01C | TEA-PRV-0(205)T | ___ OF ___

DATE- | LOCATION- | REVISIONS- | FINISHED PLANS- | SURVEY NO.

9/12/2014 T:\Prescott_MUP\SL641_ph2\Structures\SL641_wpln06.dgn

F.H.W.A. REGION	STATE	PROJECT NO.	SHEET NO.	TOTAL SHEETS	AS BUILT
9	ARIZ.	TEA-PRV-0(205)T			
		PRV 0000 YV			

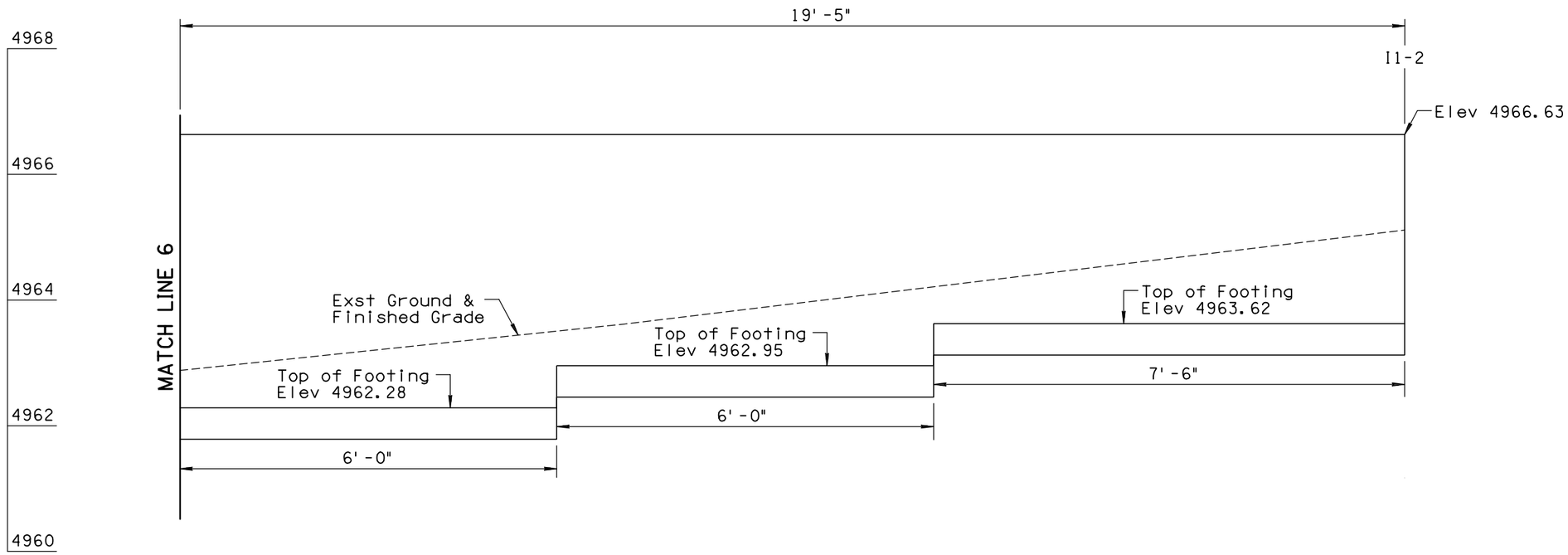

WALL I1

Scale: 1" = 1'
Length: 168' -9"
Area: 543.27 sq ft

NOTE:

1. See Detail I for Horizontal Control.
2. See Detail X for Additional Wall Information.
3. Minimum 1 foot of cover over the Wall Footing.

	NAME	DATE
DESIGN	SMG	06/14
DRAWN	CPG	06/14
CHECKED	GPF	06/14

PARSONS BRINCKERHOFF

ARIZONA DEPARTMENT OF TRANSPORTATION
INTERMODAL TRANSPORTATION DIVISION
ROADWAY DESIGN SECTION

RETAINING WALLS

ROUTE | LOCATION PRESCOTT VALLEY PIPELINE & CENTRAL CORE MULTI-USE PATHS (PIPELINE PHASE 2)

Registered Professional Engineer (Civil) CERTIFICATE NO. 49430 GREGORY PATRICK FLY ARIZONA U.S.A.
Expires 3/31/2015

DWG NO. S2-1.07

TRACS NO. SL680 01C | TEA-PRV-0(205)T | ___ OF ___

DATE- | LOCATION- | REVISIONS- | FINISHED PLANS- | SURVEY NO.

F.H.W.A. REGION	STATE	PROJECT NO.	SHEET NO.	TOTAL SHEETS	AS BUILT
9	ARIZ.	TEA-PRV-0(205)T			
		PRV 0000 YV			

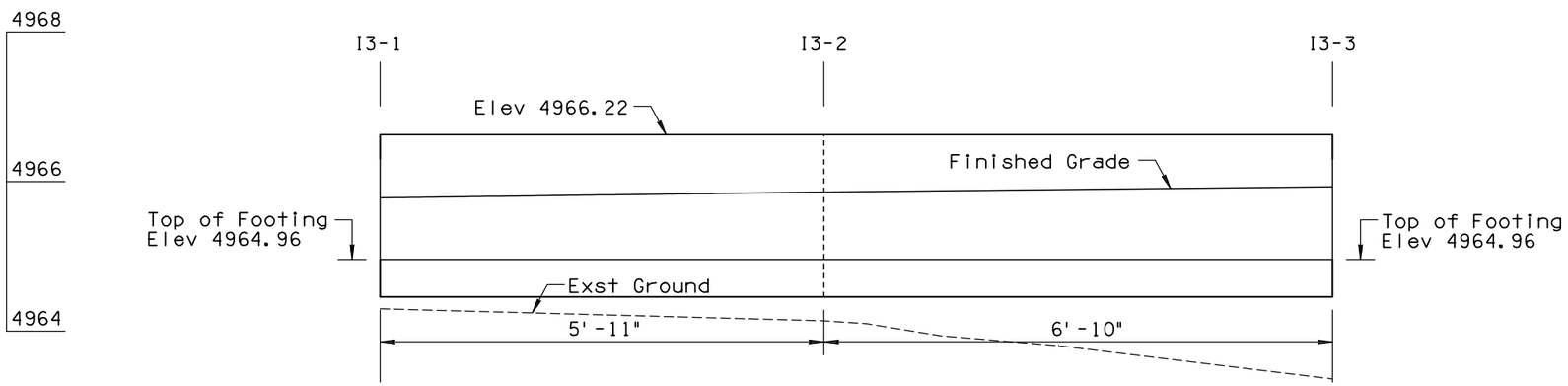

WALL I3

Scale: 1"=1'
Length: 12'-9"
Area: 21.29 sq ft

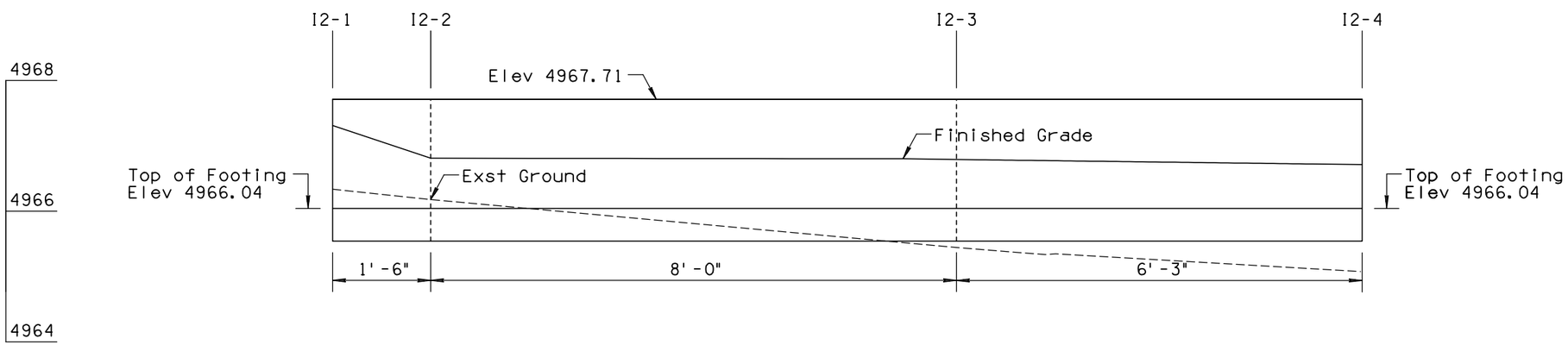

WALL I2

Scale: 1"=1'
Length: 15'-9"
Area: 26.31 sq ft

NOTE:

1. See Detail I for Horizontal Control.
2. See Detail X for Additional Wall Information.
3. Minimum 1 foot of cover over the Wall Footing.

	NAME	DATE
DESIGN	SMG	06/14
DRAWN	CPG	06/14
CHECKED	GPF	06/14

PARSONS BRINCKERHOFF

ARIZONA DEPARTMENT OF TRANSPORTATION
INTERMODAL TRANSPORTATION DIVISION
ROADWAY DESIGN SECTION

RETAINING WALLS

ROUTE | LOCATION PRESCOTT VALLEY PIPELINE & CENTRAL CORE MULTI-USE PATHS (PIPELINE PHASE 2)

Registered Professional Engineer (Civil) CERTIFICATE NO. 49430 GREGORY PATRICK FLY ARIZONA U.S.A.
Expires 3/31/2015

DWG NO. S2-1.08

TRACS NO. SL680 01C | TEA-PRV-0(205)T | ___ OF ___

F.H.W.A. REGION	STATE	PROJECT NO.	SHEET NO.	TOTAL SHEETS	AS BUILT
9	ARIZ.	TEA-PRV-0(205)T			
		PRV 0000 YV			

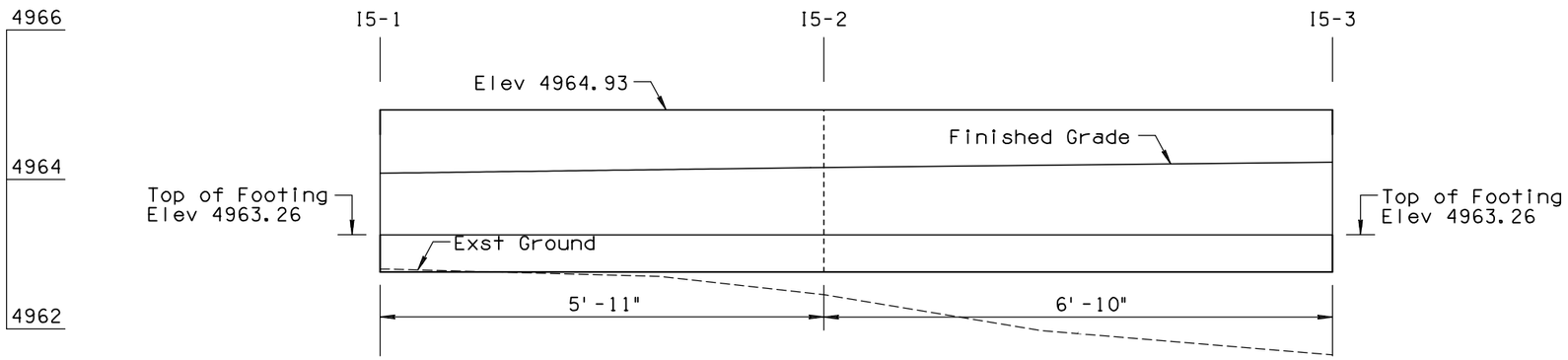

WALL I5

Scale: 1"=1'
Length: 12'-9"
Area: 21.29 sq ft

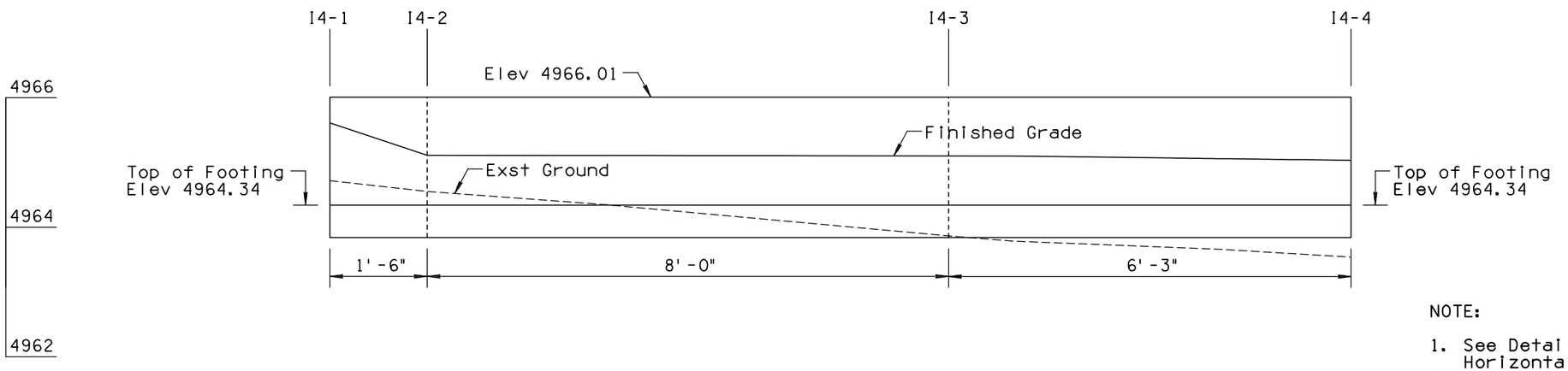

WALL I4

Scale: 1"=1'
Length: 15'-9"
Area: 26.31 sq ft

NOTE:

1. See Detail I for Horizontal Control.
2. See Detail X for Additional Wall Information.
3. Minimum 1 foot of cover over the Wall Footing.

	NAME	DATE
DESIGN	SMG	06/14
DRAWN	CPG	06/14
CHECKED	GPF	06/14

PARSONS BRINCKERHOFF

ARIZONA DEPARTMENT OF TRANSPORTATION
INTERMODAL TRANSPORTATION DIVISION
ROADWAY DESIGN SECTION

RETAINING WALLS

ROUTE | LOCATION PRESCOTT VALLEY PIPELINE & CENTRAL CORE MULTI-USE PATHS (PIPELINE PHASE 2)

Registered Professional Engineer (Civil) CERTIFICATE NO. 49430 GREGORY PATRICK FLY ARIZONA U.S.A.
Expires 3/31/2015

DWG NO. S2-1.09

TRACS NO. SL680 01C | TEA-PRV-0(205)T | ____ OF ____

DATE- LOCATION- REVISIONS- FINISHED PLANS- SURVEY NO.

F.H.W.A. REGION	STATE	PROJECT NO.	SHEET NO.	TOTAL SHEETS	AS BUILT
9	ARIZ.	TEA-PRV-0(205)T			
		PRV 0000 YV			

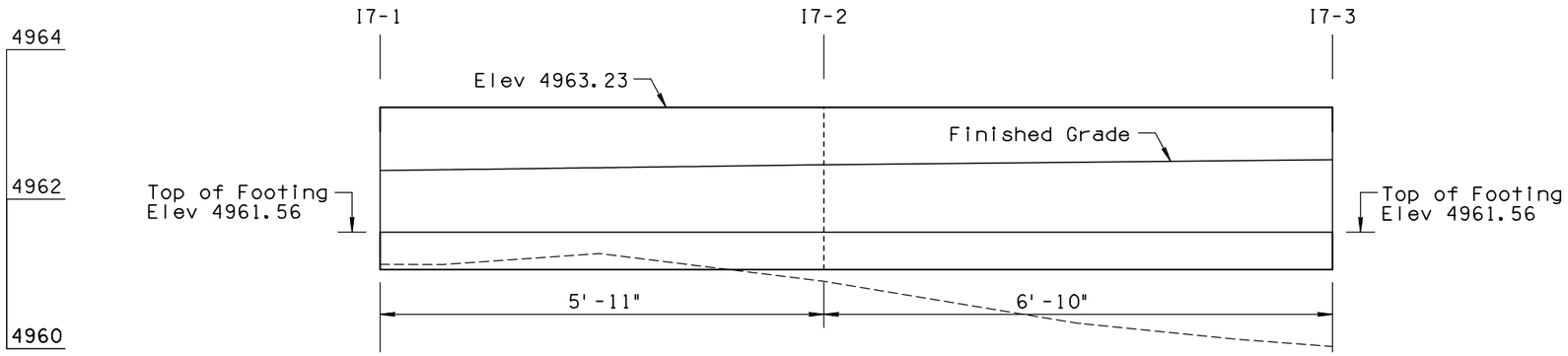

WALL I7

Scale: 1"=1'
Length: 12'-9"
Area: 21.29 sq ft

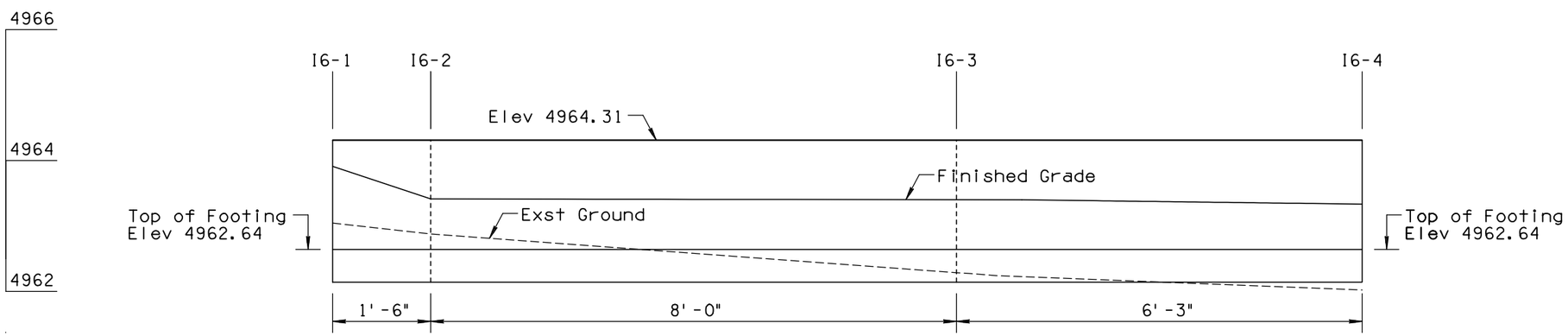

NOTE:

1. See Detail I for Horizontal Control.
2. See Detail X for Additional Wall Information.
3. Minimum 1 foot of cover over the Wall Footing.

WALL I6

Scale: 1"=1'
Length: 15'-9"
Area: 26.31 sq ft

	NAME	DATE
DESIGN	SMG	06/14
DRAWN	CPG	06/14
CHECKED	GPF	06/14

PARSONS BRINCKERHOFF

ARIZONA DEPARTMENT OF TRANSPORTATION
INTERMODAL TRANSPORTATION DIVISION
ROADWAY DESIGN SECTION

RETAINING WALLS

ROUTE | LOCATION PRESCOTT VALLEY PIPELINE & CENTRAL CORE MULTI-USE PATHS (PIPELINE PHASE 2)

Registered Professional Engineer (Civil) CERTIFICATE NO. 49430 GREGORY PATRICK FLY ARIZONA U.S.A.
Expires 3/31/2015

DWG NO. S2-1.10

TRACS NO. SL680 01C | TEA-PRV-0(205)T | ____ OF ____

DATE- LOCATION- REVISIONS- FINISHED PLANS- SURVEY NO.

F.H.W.A. REGION	STATE	PROJECT NO.	SHEET NO.	TOTAL SHEETS	AS BUILT
9	ARIZ.	TEA-PRV-0(205)T			
		PRV 0000 YV			

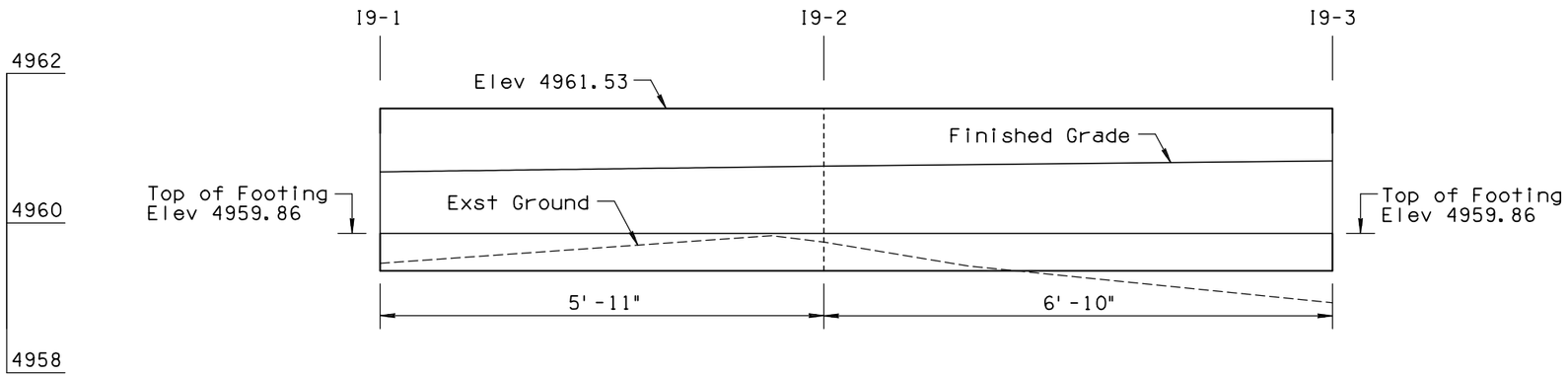

WALL I9

Scale: 1"=1'
Length: 12'-9"
Area: 21.29 sq ft

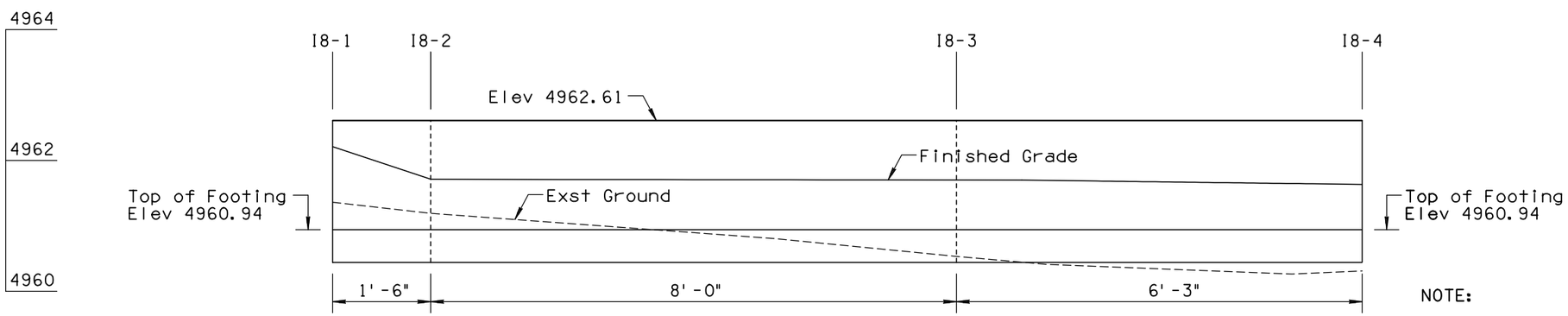

WALL I8

Scale: 1"=1'
Length: 15'-9"
Area: 26.31 sq ft

NOTE:

1. See Detail I for Horizontal Control.
2. See Detail X for Additional Wall Information.
3. Minimum 1 foot of cover over the Wall Footing.

	NAME	DATE
DESIGN	SMG	06/14
DRAWN	CPG	06/14
CHECKED	GPF	06/14

PARSONS BRINCKERHOFF

ARIZONA DEPARTMENT OF TRANSPORTATION
INTERMODAL TRANSPORTATION DIVISION
ROADWAY DESIGN SECTION

RETAINING WALLS

ROUTE | LOCATION PRESCOTT VALLEY PIPELINE & CENTRAL CORE MULTI-USE PATHS (PIPELINE PHASE 2)

Registered Professional Engineer (Civil) CERTIFICATE NO. 49430 GREGORY PATRICK FLY ARIZONA U.S.A.
Expires 3/31/2015

DWG NO. S2-1.11

TRACS NO. SL680 01C | TEA-PRV-0(205)T | ____ OF ____

DATE- LOCATION- REVISIONS- FINISHED PLANS- SURVEY NO.

F.H.W.A. REGION	STATE	PROJECT NO.	SHEET NO.	TOTAL SHEETS	AS BUILT
9	ARIZ.	TEA-PRV-0(205)T			
		PRV 0000 YV			

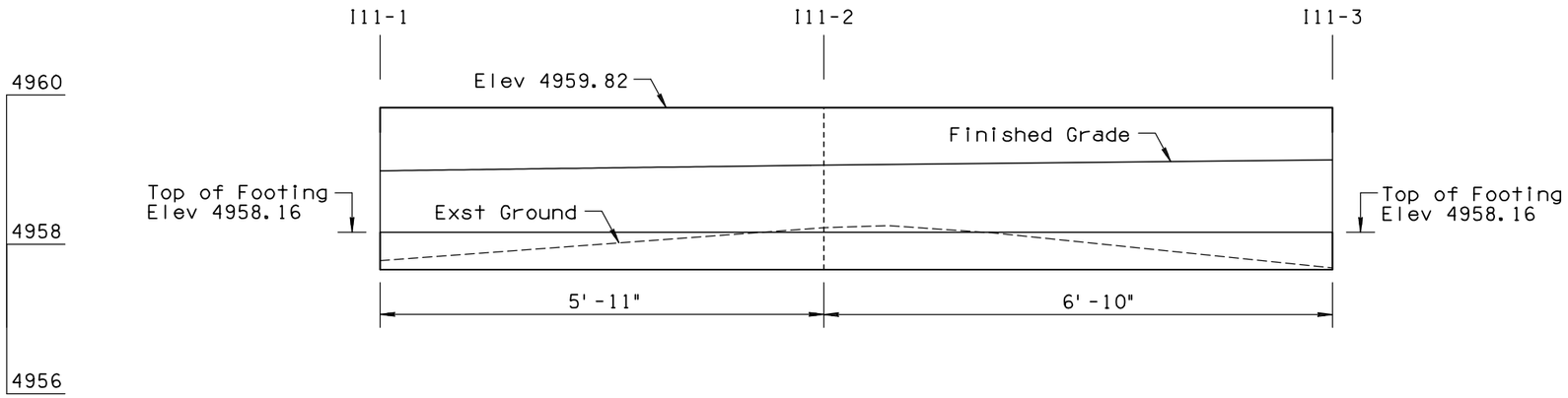

WALL I11

Scale: 1"=1'
Length: 12'-9"
Area: 21.29 sq ft

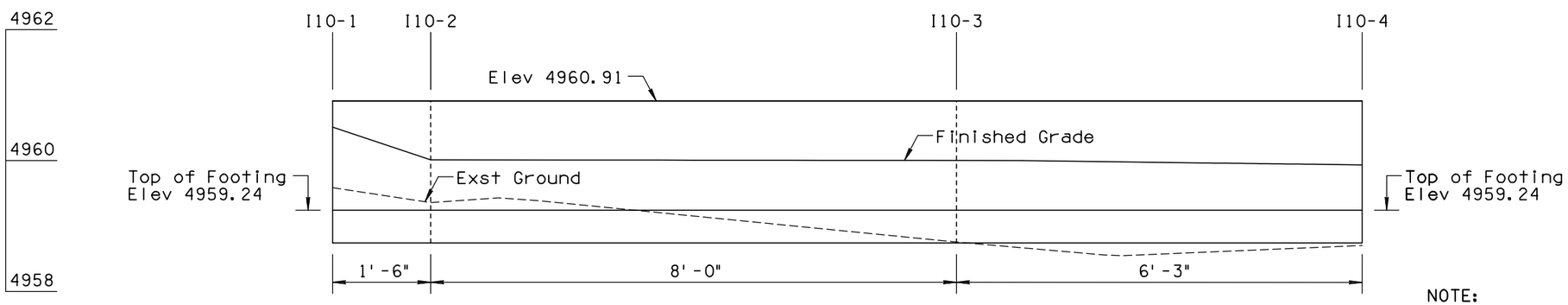

WALL I10

Scale: 1"=1'
Length: 15'-9"
Area: 26.31 sq ft

NOTE:

1. See Detail I for Horizontal Control.
2. See Detail X for Additional Wall Information.
3. Minimum 1 foot of cover over the Wall Footing.

	NAME	DATE
DESIGN	SMG	06/14
DRAWN	CPG	06/14
CHECKED	GPF	06/14

PARSONS BRINCKERHOFF

ARIZONA DEPARTMENT OF TRANSPORTATION
INTERMODAL TRANSPORTATION DIVISION
ROADWAY DESIGN SECTION

RETAINING WALLS

ROUTE | LOCATION PRESCOTT VALLEY PIPELINE & CENTRAL CORE MULTI-USE PATHS (PIPELINE PHASE 2)

Registered Professional Engineer (Civil) CERTIFICATE NO. 49430 GREGORY PATRICK FLY ARIZONA U.S.A.
Expires 3/31/2015

DWG NO. S2-1.12

TRACS NO. SL680 01C | TEA-PRV-0(205)T | ____ OF ____

SURVEY NO. | FINISHED PLANS- | REVISIONS- | LOCATION- | DATE-

F.H.W.A. REGION	STATE	PROJECT NO.	SHEET NO.	TOTAL SHEETS	AS BUILT
9	ARIZ.	TEA-PRV-0(205)T			
		PRV 0000 YV			

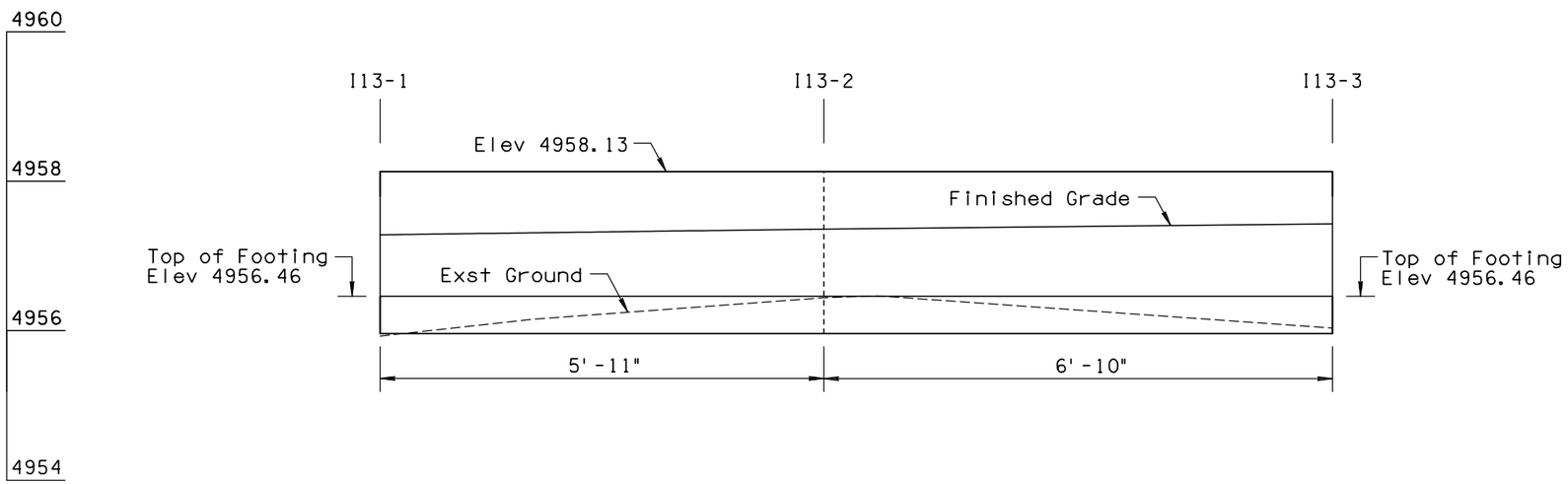

WALL I13

Scale: 1"=1'
Length: 12'-9"
Area: 21.29 sq ft

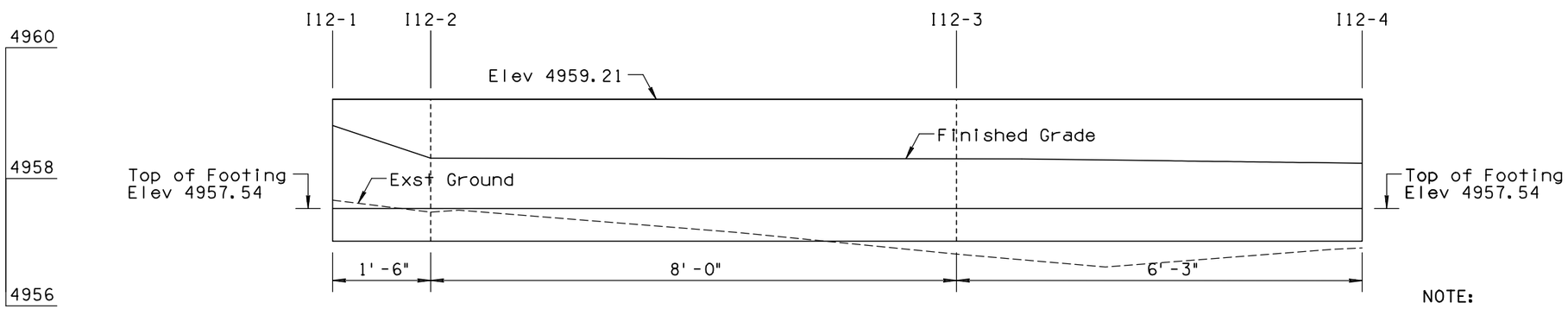

WALL I12

Scale: 1"=1'
Length: 15'-9"
Area: 26.31 sq ft

NOTE:

1. See Detail I for Horizontal Control.
2. See Detail X for Additional Wall Information.
3. Minimum 1 foot of cover over the Wall Footing.

	NAME	DATE
DESIGN	SMG	06/14
DRAWN	CPG	06/14
CHECKED	GPF	06/14

PARSONS BRINCKERHOFF

ARIZONA DEPARTMENT OF TRANSPORTATION
INTERMODAL TRANSPORTATION DIVISION
ROADWAY DESIGN SECTION

RETAINING WALLS

ROUTE | LOCATION PRESCOTT VALLEY PIPELINE & CENTRAL CORE MULTI-USE PATHS (PIPELINE PHASE 2)

Registered Professional Engineer (Civil) CERTIFICATE NO. 49430 GREGORY PATRICK FLY ARIZONA U.S.A. Expires 3/31/2015

DWG NO. S2-1.13

TRACS NO. SL680 01C | TEA-PRV-0(205)T | ____ OF ____

DATE- LOCATION- REVISIONS- FINISHED PLANS- SURVEY NO.

F.H.W.A. REGION	STATE	PROJECT NO.	SHEET NO.	TOTAL SHEETS	AS BUILT
9	ARIZ.	TEA-PRV-0(205)T			
		PRV 0000 YV			

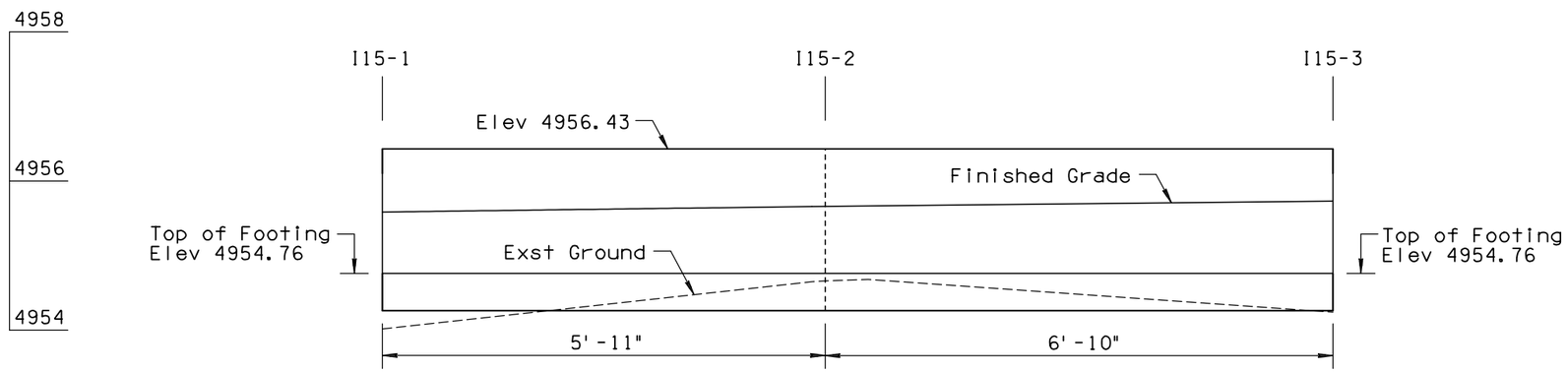

WALL I15

Scale: 1"=1'
Length: 12'-9"
Area: 21.29 sq ft

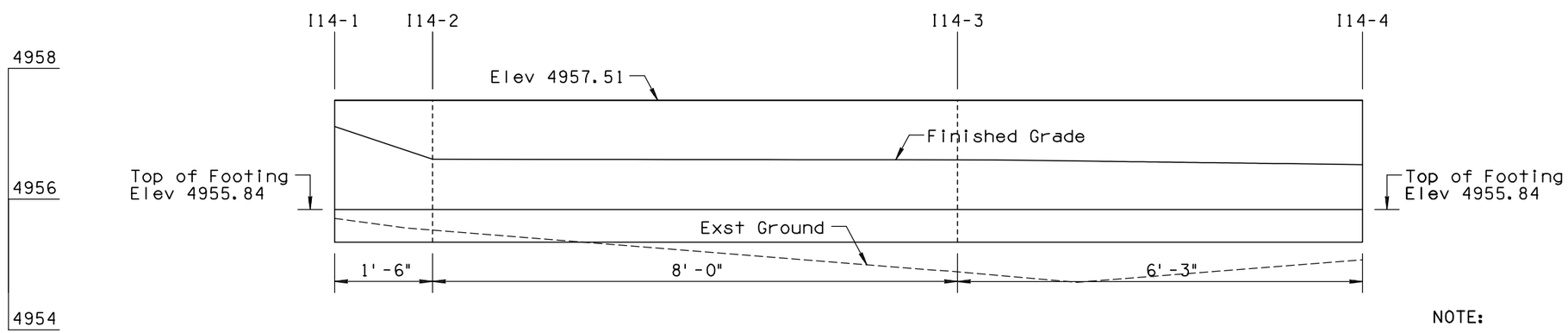

WALL I14

Scale: 1"=1'
Length: 15'-9"
Area: 26.31 sq ft

NOTE:

1. See Detail I for Horizontal Control.
2. See Detail X for Additional Wall Information.
3. Minimum 1 foot of cover over the Wall Footing.

	NAME	DATE
DESIGN	SMG	06/14
DRAWN	CPG	06/14
CHECKED	GPF	06/14

PARSONS BRINCKERHOFF

ARIZONA DEPARTMENT OF TRANSPORTATION
INTERMODAL TRANSPORTATION DIVISION
ROADWAY DESIGN SECTION

RETAINING WALLS

ROUTE | LOCATION PRESCOTT VALLEY PIPELINE & CENTRAL CORE MULTI-USE PATHS (PIPELINE PHASE 2)

Registered Professional Engineer (Civil) CERTIFICATE NO. 49430 GREGORY PATRICK FLY ARIZONA U.S.A.
Expires 3/31/2015

DWG NO. S2-1.14

TRACS NO. SL680 01C | TEA-PRV-0(205)T | ____ OF ____

DATE- LOCATION- REVISIONS- FINISHED PLANS- SURVEY NO.

F.H.W.A. REGION	STATE	PROJECT NO.	SHEET NO.	TOTAL SHEETS	AS BUILT
9	ARIZ.	TEA-PRV-0(205)T			
		PRV 0000 YV			

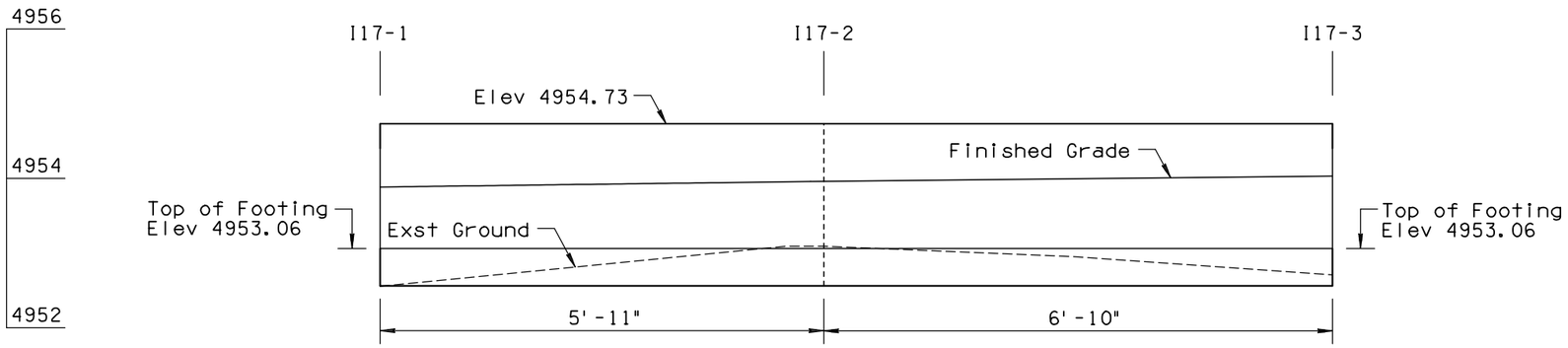

WALL I17

Scale: 1"=1'
Length: 12'-9"
Area: 21.29 sq ft

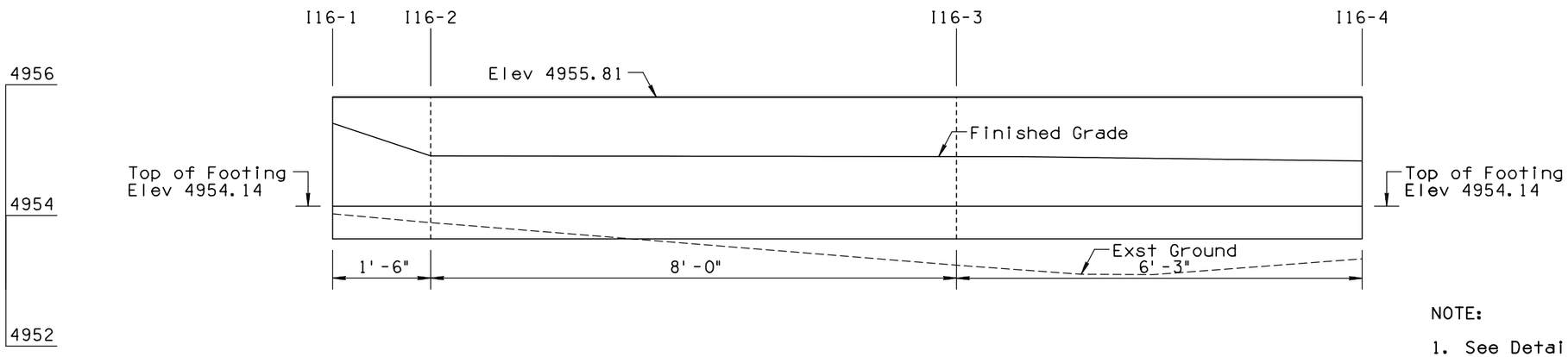

NOTE:

1. See Detail I for Horizontal Control.
2. See Detail X for Additional Wall Information.
3. Minimum 1 foot of cover over the Wall Footing.

WALL I16

Scale: 1"=1'
Length: 15'-9"
Area: 26.31 sq ft

	NAME	DATE
DESIGN	SMG	06/14
DRAWN	CPG	06/14
CHECKED	GPF	06/14

PARSONS BRINCKERHOFF

ARIZONA DEPARTMENT OF TRANSPORTATION
INTERMODAL TRANSPORTATION DIVISION
ROADWAY DESIGN SECTION

RETAINING WALLS

ROUTE | LOCATION PRESCOTT VALLEY PIPELINE & CENTRAL CORE MULTI-USE PATHS (PIPELINE PHASE 2)

Registered Professional Engineer (Civil) CERTIFICATE NO. 49430 GREGORY PATRICK FLY ARIZONA U.S.A.
Expires 3/31/2015

DWG NO. S2-1.15

TRACS NO. SL680 01C | TEA-PRV-0(205)T | ____ OF ____

DATE- LOCATION- REVISIONS- FINISHED PLANS- SURVEY NO.

F.H.W.A. REGION	STATE	PROJECT NO.	SHEET NO.	TOTAL SHEETS	AS BUILT
9	ARIZ.	TEA-PRV-0(205)T			
		PRV 0000 YV			

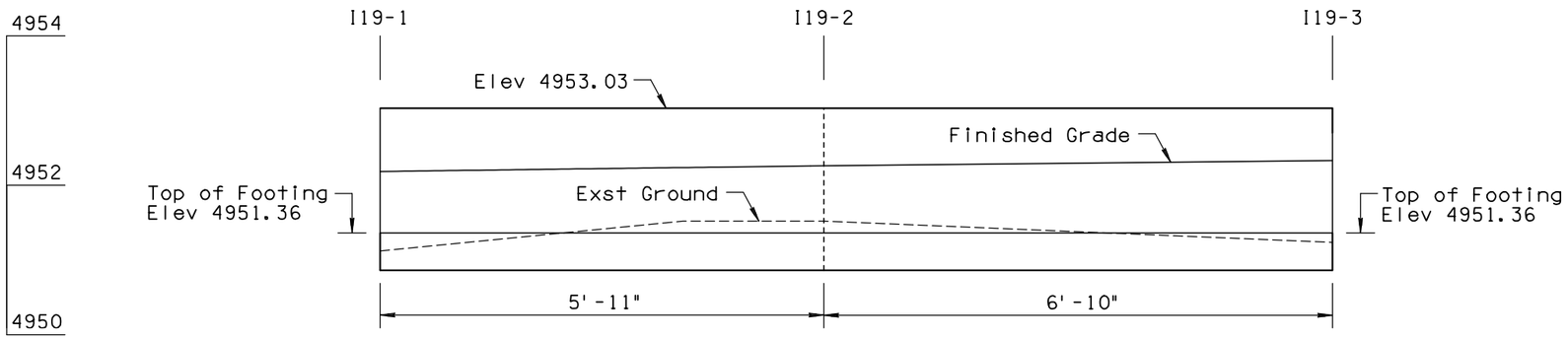

WALL I19

Scale: 1"=1'
Length: 12'-9"
Area: 21.29 sq ft

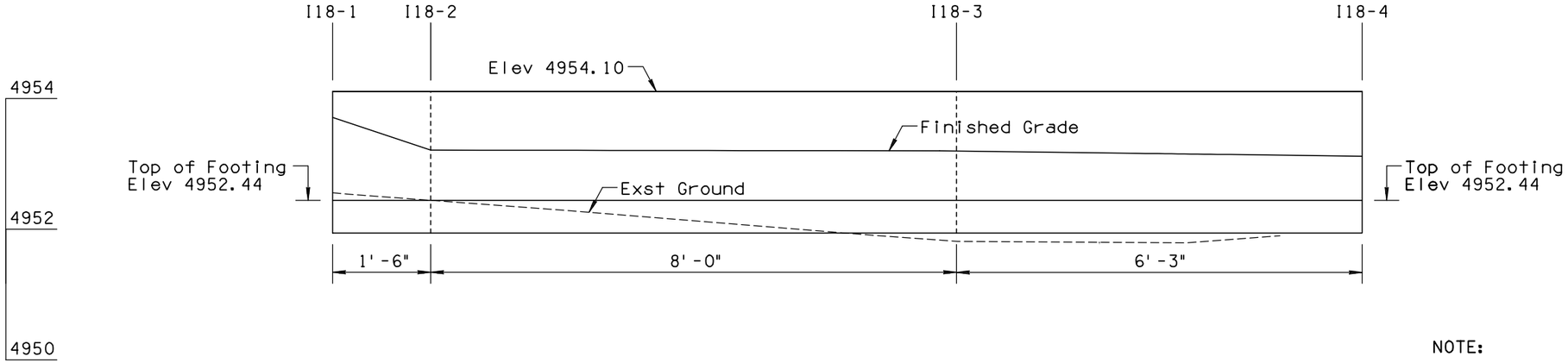

WALL I18

Scale: 1"=1'
Length: 15'-9"
Area: 26.31 sq ft

NOTE:

1. See Detail I for Horizontal Control.
2. See Detail X for Additional Wall Information.
3. Minimum 1 foot of cover over the Wall Footing.

	NAME	DATE
DESIGN	SMG	06/14
DRAWN	CPG	06/14
CHECKED	GPF	06/14

PARSONS BRINCKERHOFF

ARIZONA DEPARTMENT OF TRANSPORTATION
INTERMODAL TRANSPORTATION DIVISION
ROADWAY DESIGN SECTION

RETAINING WALLS

ROUTE | LOCATION PRESCOTT VALLEY PIPELINE & CENTRAL CORE MULTI-USE PATHS (PIPELINE PHASE 2)

Registered Professional Engineer (Civil) CERTIFICATE NO. 49430 GREGORY PATRICK FLY ARIZONA U.S.A.
Expires 3/31/2015

DWG NO. S2-1.16

TRACS NO. SL680 01C | TEA-PRV-0(205)T | ____ OF ____

DATE- LOCATION- REVISIONS- FINISHED PLANS- SURVEY NO.

F.H.W.A. REGION	STATE	PROJECT NO.	SHEET NO.	TOTAL SHEETS	AS BUILT
9	ARIZ.	TEA-PRV-0(205)T			
		PRV 0000 YV			

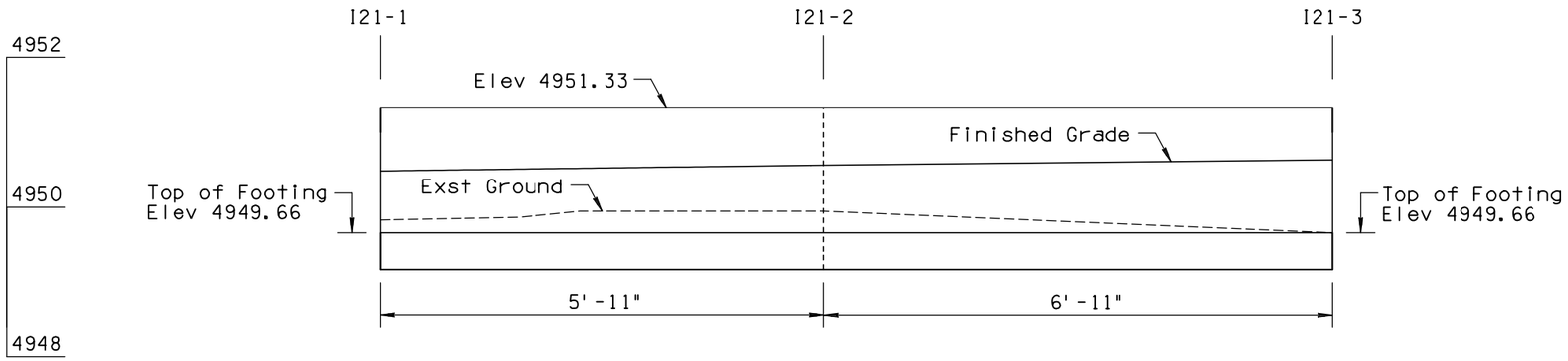

WALL I21

Scale: 1"=1'
Length: 12'-9"
Area: 21.29 sq ft

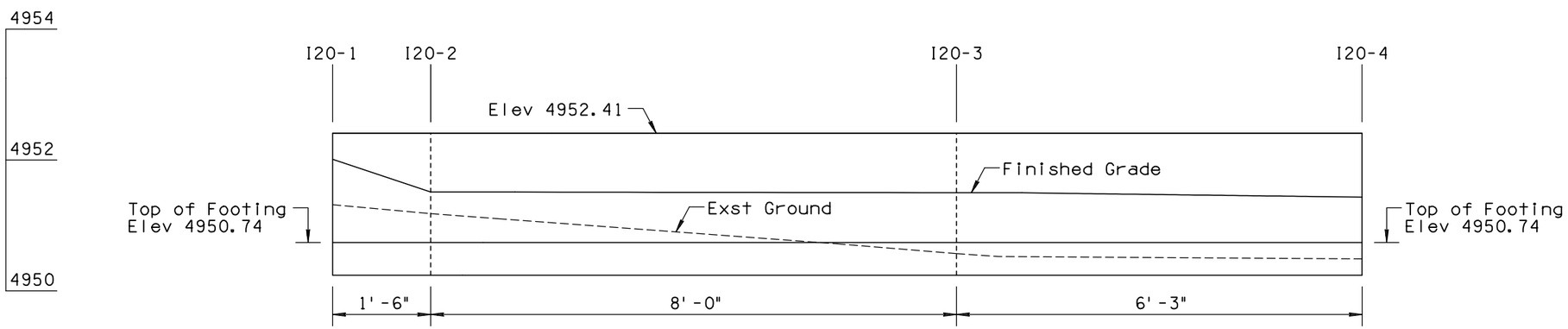

WALL I20

Scale: 1"=1'
Length: 15'-9"
Area: 26.31 sq ft

NOTE:

1. See Detail I for Wall Horizontal Control.
2. See Detail X for Additional Wall Information.
3. Minimum 1 foot of cover over the Wall Footing.

	NAME	DATE
DESIGN	SMG	06/14
DRAWN	CPG	06/14
CHECKED	GPF	06/14

PARSONS BRINCKERHOFF

ARIZONA DEPARTMENT OF TRANSPORTATION
INTERMODAL TRANSPORTATION DIVISION
ROADWAY DESIGN SECTION

RETAINING WALLS

ROUTE | LOCATION PRESCOTT VALLEY PIPELINE & CENTRAL CORE MULTI-USE PATHS (PIPELINE PHASE 2)

Registered Professional Engineer (Civil) CERTIFICATE NO. 49430 GREGORY PATRICK FLY ARIZONA U.S.A.
Expires 3/31/2015

DWG NO. S2-1.17

TRACS NO. SL680 01C | TEA-PRV-0(205)T | ____ OF ____

F.H.W.A. REGION	STATE	PROJECT NO.	SHEET NO.	TOTAL SHEETS	AS BUILT
9	ARIZ.	TEA-PRV-0(205)T			
		PRV 0000 YV			

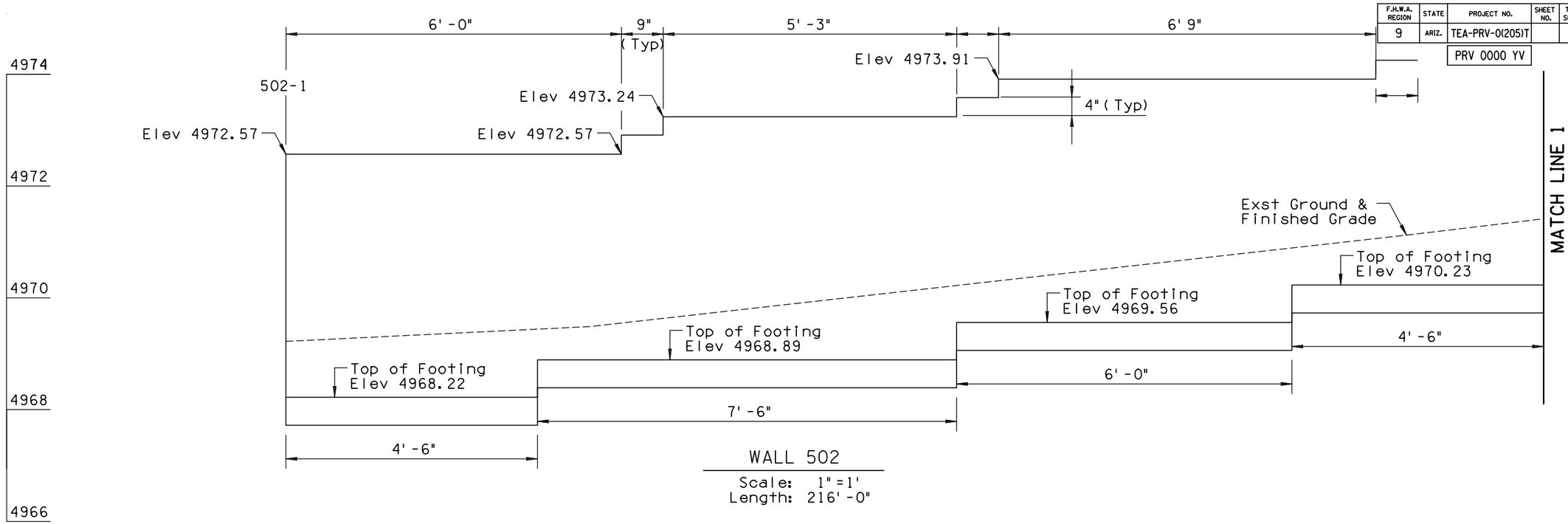

WALL 502

Scale: 1" = 1'
Length: 216'-0"

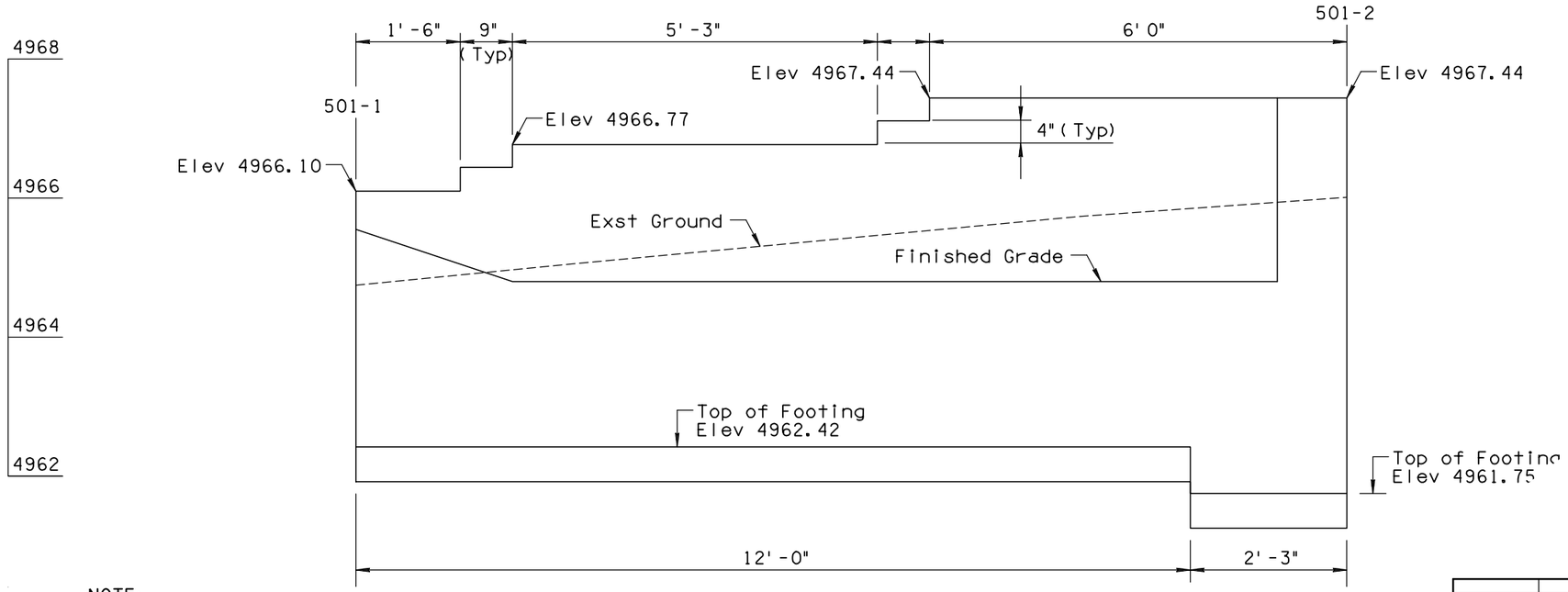

NOTE:

1. See Plans for Horizontal Locations
2. See Detail X for Additional Wall Information.
3. Minimum 1 foot of cover over the Wall Footing.

WALL 501

Scale: 1" = 1'
Length: 14'-3"
Area: 66.52 sq ft

	NAME	DATE
DESIGN	SMG	06/14
DRAWN	CPG	06/14
CHECKED	GPF	06/14

PARSONS BRINCKERHOFF

ARIZONA DEPARTMENT OF TRANSPORTATION
INTERMODAL TRANSPORTATION DIVISION
ROADWAY DESIGN SECTION

RETAINING WALLS

ROUTE | LOCATION PRESCOTT VALLEY PIPELINE & CENTRAL CORE MULTI-USE PATHS (PIPELINE PHASE 2)

Registered Professional Engineer (Civil) CERTIFICATE NO. 49430 GREGORY PATRICK FLY ARIZONA U.S.A.
Expires 3/31/2015

DWG NO. S2-1.18

TRACS NO. SL680 01C | TEA-PRV-0(205)T | ___ OF ___

DATE- LOCATION- REVISIONS- FINISHED PLANS- SURVEY NO.

9/12/2014 T:\Prescott_MUP\SL641_ph2\Structures\SL641_wpln18.dgn

F.H.W.A. REGION	STATE	PROJECT NO.	SHEET NO.	TOTAL SHEETS	AS BUILT
9	ARIZ.	TEA-PRV-0(205)T			
		PRV 0000 YV			

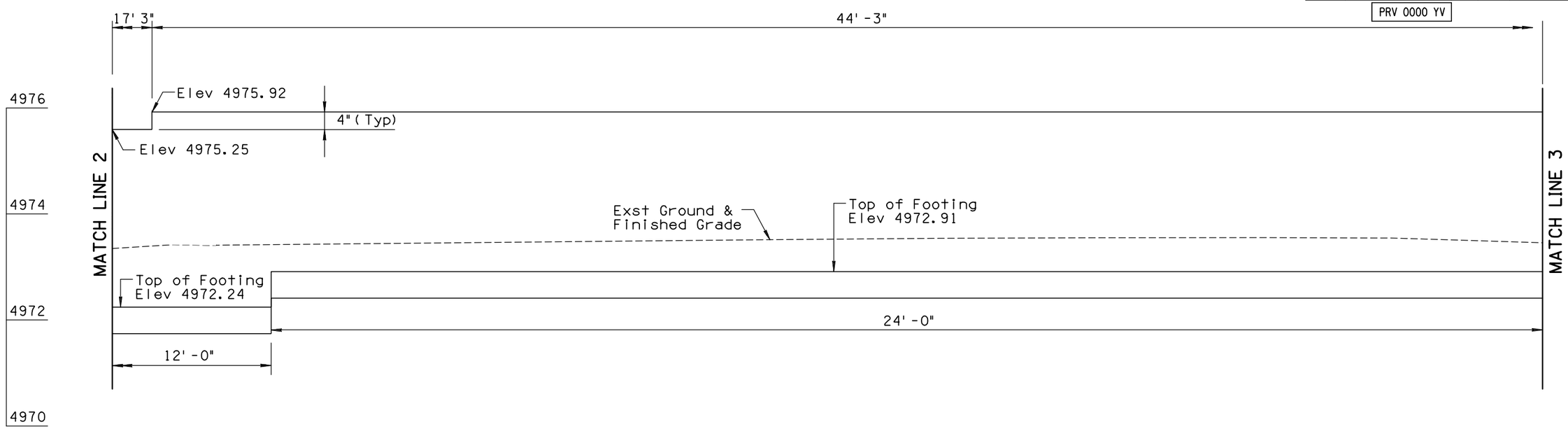

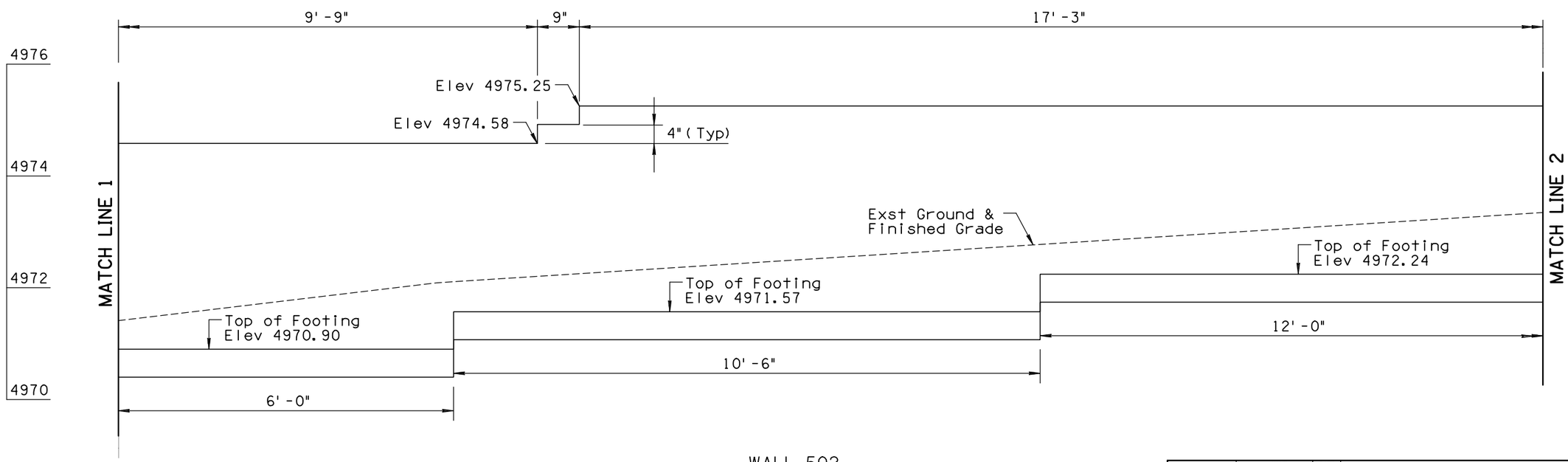

NOTE:

1. See Plans for Horizontal Locations
2. See Detail X for Additional Wall Information.
3. Minimum 1 foot of cover over the Wall Footing.

WALL 502

Scale: 1" = 1'
Length: 216' -0"

	NAME	DATE
DESIGN	SMG	06/14
DRAWN	CPG	06/14
CHECKED	GPF	06/14

PARSONS BRINCKERHOFF

ARIZONA DEPARTMENT OF TRANSPORTATION
INTERMODAL TRANSPORTATION DIVISION
ROADWAY DESIGN SECTION

RETAINING WALLS

ROUTE | LOCATION: PRESCOTT VALLEY PIPELINE & CENTRAL CORE MULTI-USE PATHS (PIPELINE PHASE 2)

Registered Professional Engineer (Civil) CERTIFICATE NO. 49430 GREGORY PATRICK FLY ARIZONA U.S.A.
Expires 3/31/2015

DWG NO. S2-1.19

TRACS NO. SL680 01C | TEA-PRV-0(205)T | ___ OF ___

DATE- LOCATION- REVISIONS- FINISHED PLANS- SURVEY NO.

F.H.W.A. REGION	STATE	PROJECT NO.	SHEET NO.	TOTAL SHEETS	AS BUILT
9	ARIZ.	TEA-PRV-0(205)T			
		PRV 0000 YV			

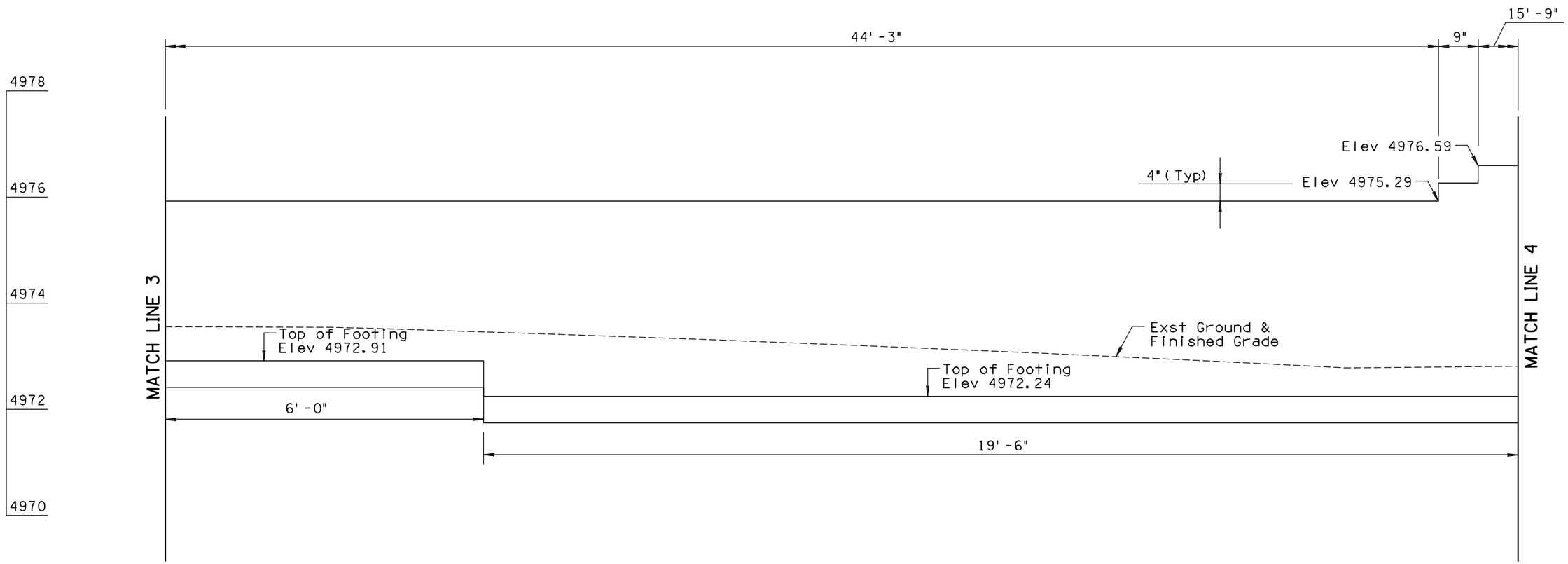

WALL 502

Scale: 1" = 1'
Length: 216' -0"

NOTE:

1. See Plans for Horizontal Locations
2. See Detail X for Additional Wall Information.
3. Minimum 1 foot of cover over the Wall Footing.

	NAME	DATE
DESIGN	SMG	06/14
DRAWN	CPG	06/14
CHECKED	GPF	06/14

PARSONS BRINCKERHOFF

ARIZONA DEPARTMENT OF TRANSPORTATION
INTERMODAL TRANSPORTATION DIVISION
ROADWAY DESIGN SECTION

RETAINING WALLS

ROUTE | LOCATION PRESCOTT VALLEY PIPELINE & CENTRAL CORE MULTI-USE PATHS (PIPELINE PHASE 2)

Registered Professional Engineer (Civil) CERTIFICATE NO. 49450 GREGORY PATRICK FLY ARIZONA U.S.A.
Expires 3/31/2015

DWG NO. S2-1.20

TRACS NO. SL680 01C | TEA-PRV-0(205)T | ___ OF ___

F.H.W.A. REGION	STATE	PROJECT NO.	SHEET NO.	TOTAL SHEETS	AS BUILT
9	ARIZ.	TEA-PRV-0(205)T			
		PRV 0000 YV			

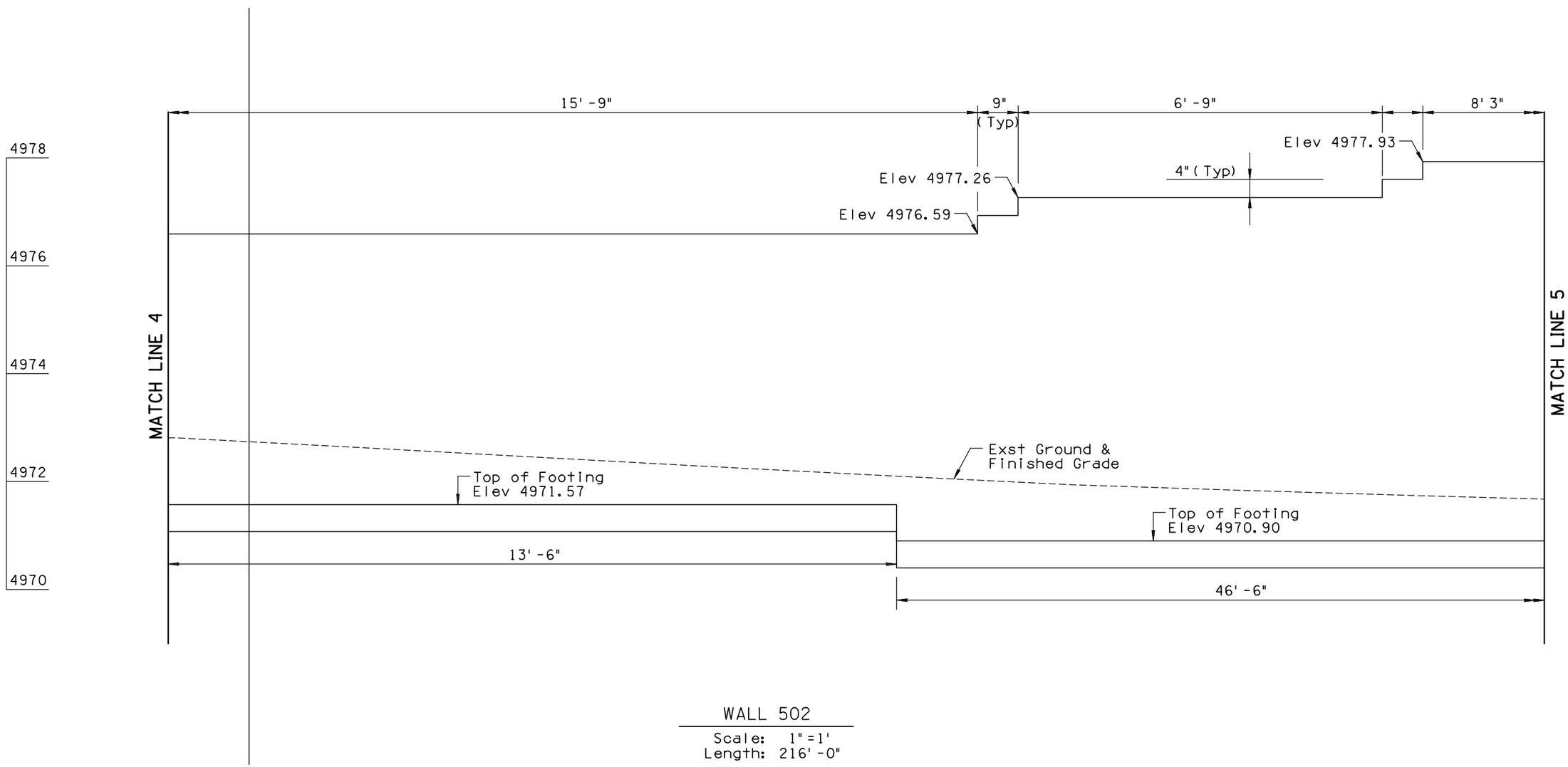

WALL 502

Scale: 1"=1'
Length: 216'-0"

NOTE:

1. See Plans for Horizontal Locations
2. See Detail X for Additional Wall Information.
3. Minimum 1 foot of cover over the Wall Footing.

	NAME	DATE
DESIGN	SMG	06/14
DRAWN	CPG	06/14
CHECKED	GPF	06/14

PARSONS BRINCKERHOFF

ARIZONA DEPARTMENT OF TRANSPORTATION
INTERMODAL TRANSPORTATION DIVISION
ROADWAY DESIGN SECTION

RETAINING WALLS

ROUTE | LOCATION PRESCOTT VALLEY PIPELINE & CENTRAL CORE MULTI-USE PATHS (PIPELINE PHASE 2)

Registered Professional Engineer (Civil) CERTIFICATE NO. 49450 GREGORY PATRICK FLY ARIZONA U.S.A.
Expires 3/31/2015

DWG NO. S2-1.21

TRACS NO. SL680 01C | TEA-PRV-0(205)T | ___ OF ___

SURVEY NO. | FINISHED PLANS- | REVISIONS- | LOCATION- | DATE-

F.H.W.A. REGION	STATE	PROJECT NO.	SHEET NO.	TOTAL SHEETS	AS BUILT
9	ARIZ.	TEA-PRV-0(205)T			
		PRV 0000 YV			

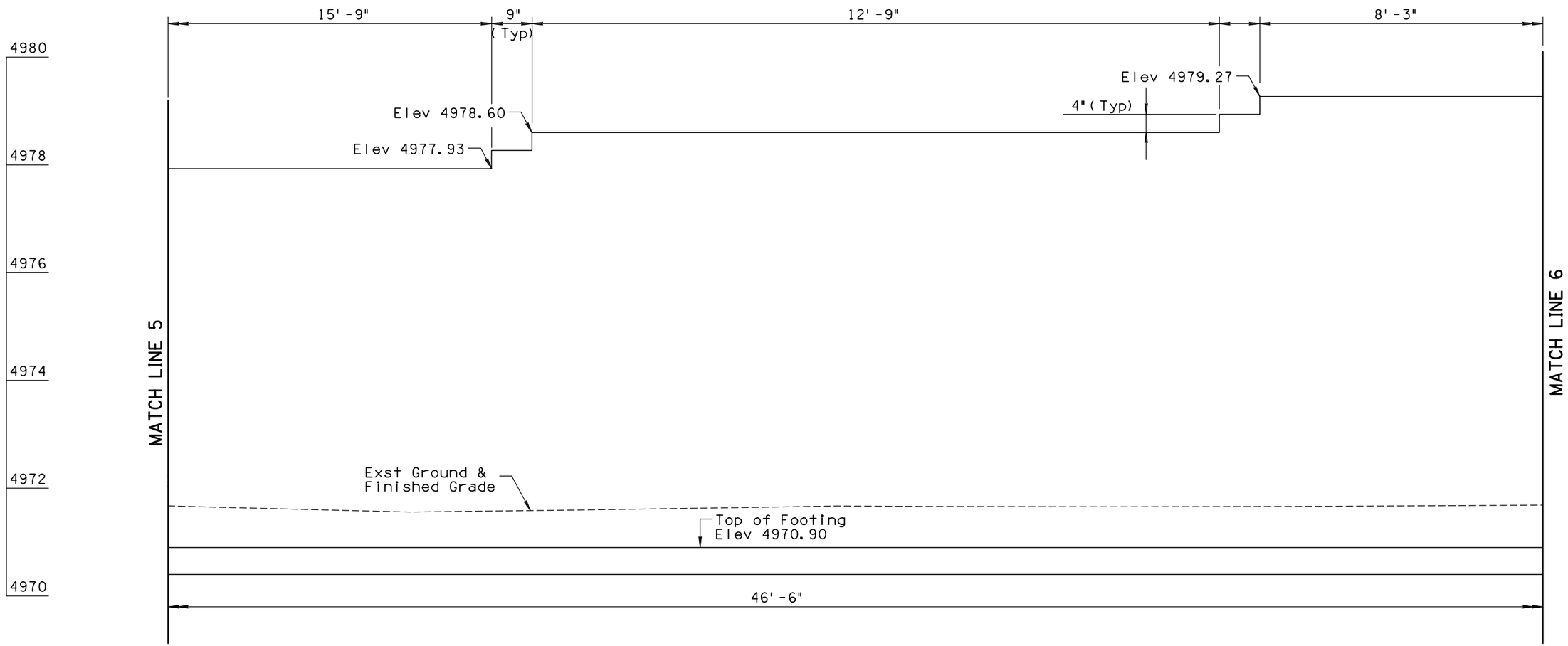

WALL 502

Scale: 1"=1'
Length: 216'-0"

NOTES:

1. See Plans for Horizontal Locations
2. See Detail X for Additional Wall Information.
3. Minimum 1 foot of cover over the Wall Footing.

	NAME	DATE
DESIGN	SMG	06/14
DRAWN	CPG	06/14
CHECKED	GPF	06/14

PARSONS BRINCKERHOFF

ARIZONA DEPARTMENT OF TRANSPORTATION
INTERMODAL TRANSPORTATION DIVISION
ROADWAY DESIGN SECTION

RETAINING WALLS

ROUTE | LOCATION PRESCOTT VALLEY PIPELINE & CENTRAL CORE MULTI-USE PATHS (PIPELINE PHASE 2)

Registered Professional Engineer (Civil) CERTIFICATE NO. 49450 GREGORY PATRICK FLY ARIZONA U.S.A.
Expires 3/31/2015

DWG NO. S2-1.22

TRACS NO. SL680 01C | TEA-PRV-0(205)T | ___ OF ___

9/12/2014 T:\Prescott_MUP\SL641_ph2\Structures\SL641_wpln22.dgn

F.H.W.A. REGION	STATE	PROJECT NO.	SHEET NO.	TOTAL SHEETS	AS BUILT
9	ARIZ.	TEA-PRV-0(205)T			
		PRV 0000 YV			

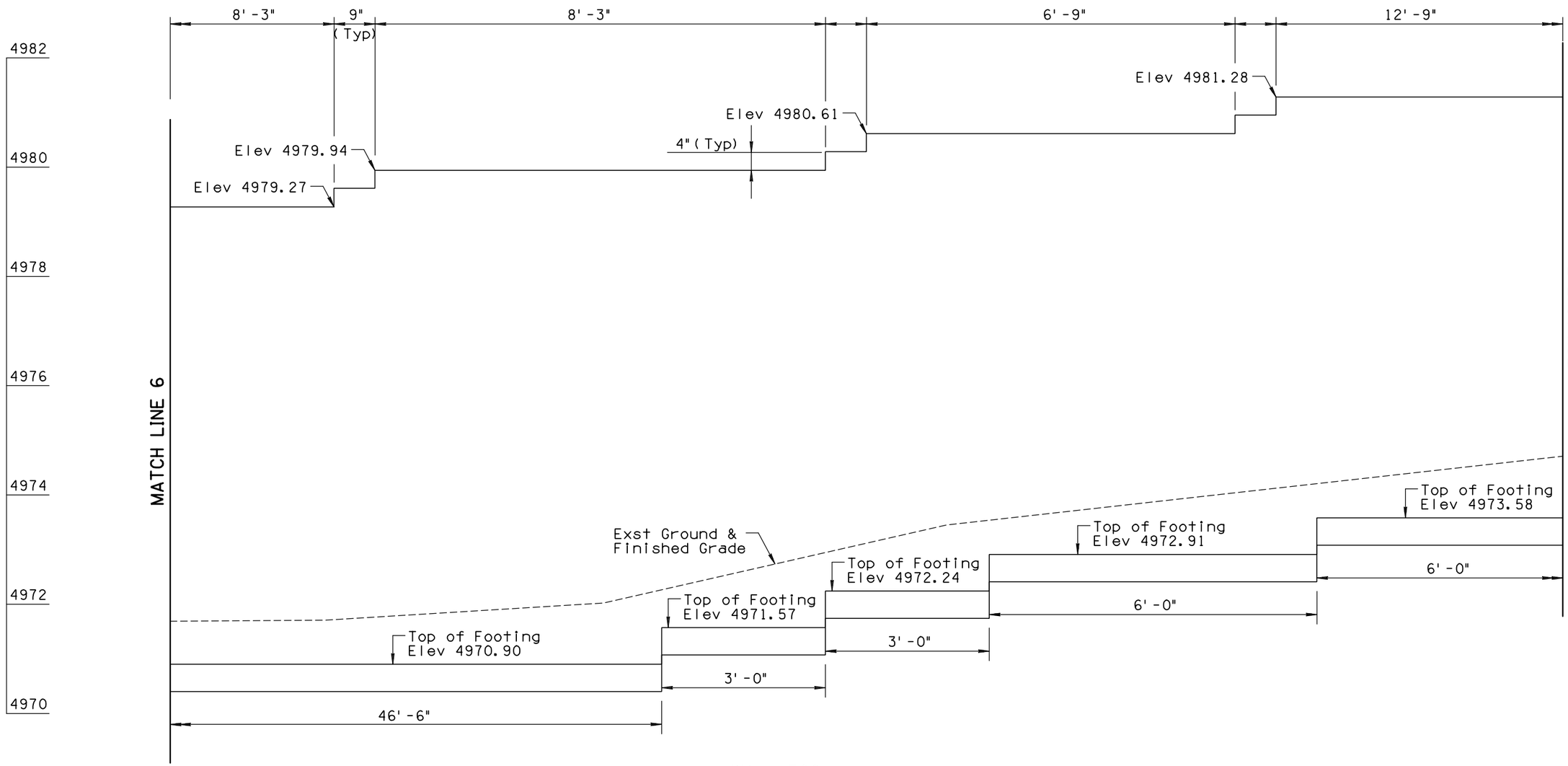

WALL 502

Scale: 1"=1'

Length: 216'-0"

NOTES:

1. See Plans for Horizontal Locations
2. See Detail X for Additional Wall Information.
3. Minimum 1 foot of cover over the Wall Footing.

	NAME	DATE
DESIGN	SMG	06/14
DRAWN	CPG	06/14
CHECKED	GPF	06/14

PARSONS BRINCKERHOFF

ARIZONA DEPARTMENT OF TRANSPORTATION
INTERMODAL TRANSPORTATION DIVISION
ROADWAY DESIGN SECTION

RETAINING WALLS

ROUTE | LOCATION PRESCOTT VALLEY PIPELINE & CENTRAL CORE MULTI-USE PATHS (PIPELINE PHASE 2)

Registered Professional Engineer (Civil) CERTIFICATE NO. 49450 GREGORY PATRICK FLY ARIZONA U.S.A.

Expires 3/31/2015

DWG NO. S2-1.23

TRACS NO. SL680 01C | TEA-PRV-0(205)T | ___ OF ___

F.H.W.A. REGION	STATE	PROJECT NO.	SHEET NO.	TOTAL SHEETS	AS BUILT
9	ARIZ.	TEA-PRV-0(205)T			
		PRV 0000 YV			

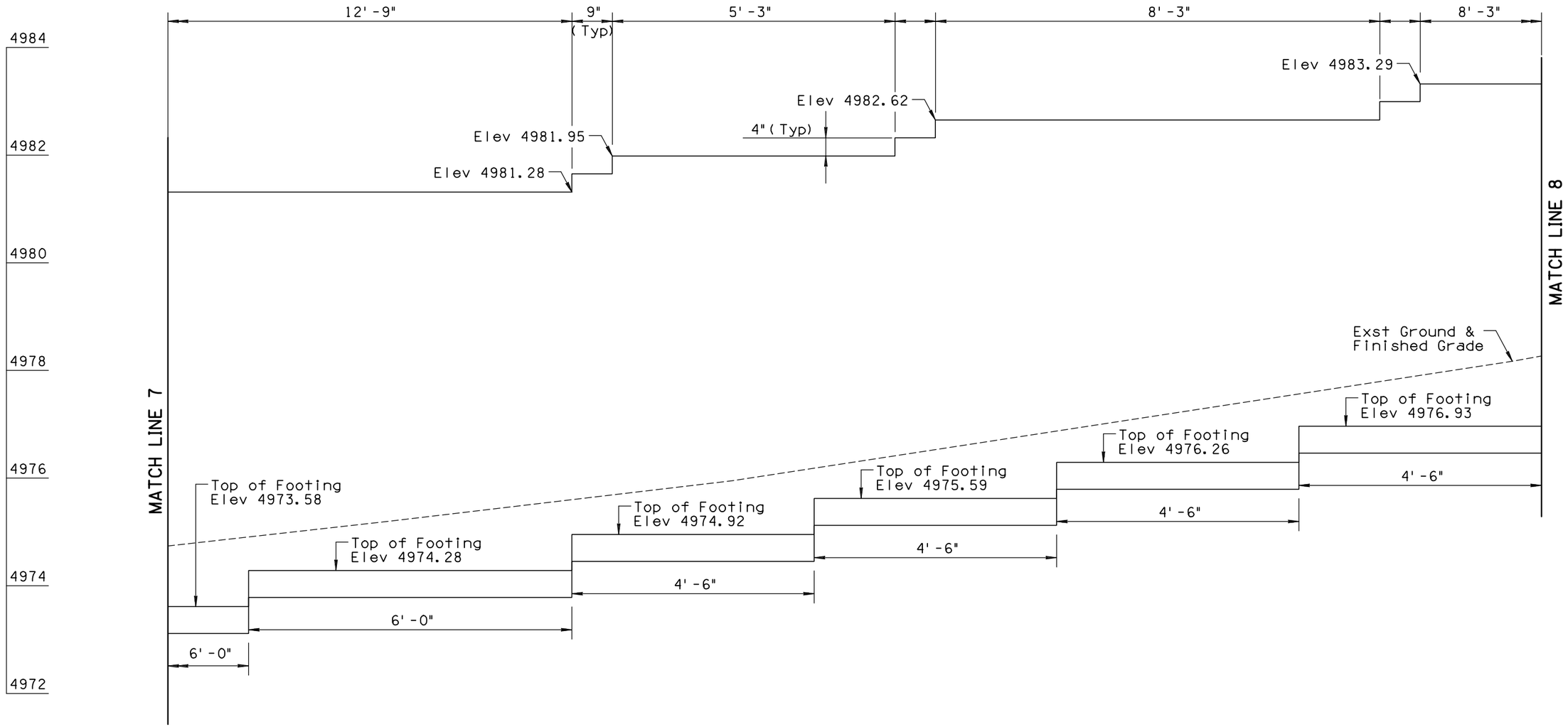

WALL 502

Scale: 1"=1'
Length: 216'-0"

NOTES:

1. See Plans for Horizontal Locations
2. See Detail X for Additional Wall Information.
3. Minimum 1 foot of cover over the Wall Footing.

	NAME	DATE
DESIGN	SMG	06/14
DRAWN	CPG	06/14
CHECKED	GPF	06/14

PARSONS BRINCKERHOFF

ARIZONA DEPARTMENT OF TRANSPORTATION
INTERMODAL TRANSPORTATION DIVISION
ROADWAY DESIGN SECTION

RETAINING WALLS

ROUTE | LOCATION PRESCOTT VALLEY PIPELINE & CENTRAL CORE MULTI-USE PATHS (PIPELINE PHASE 2)

Registered Professional Engineer (Civil) CERTIFICATE NO. 49430 GREGORY PATRICK FLY ARIZONA U.S.A. Expires 3/31/2015

DWG NO. S2-1.24

TRACS NO. SL680 01C | TEA-PRV-0(205)T | ___ OF ___

9/12/2014 T:\Prescott_MUP\SL641_ph2\Structures\SL641_wpln24.dgn

DATE- LOCATION- REVISIONS- FINISHED PLANS- SURVEY NO.

F.H.W.A. REGION	STATE	PROJECT NO.	SHEET NO.	TOTAL SHEETS	AS BUILT
9	ARIZ.	TEA-PRV-0(205)T			
		PRV 0000 YV			

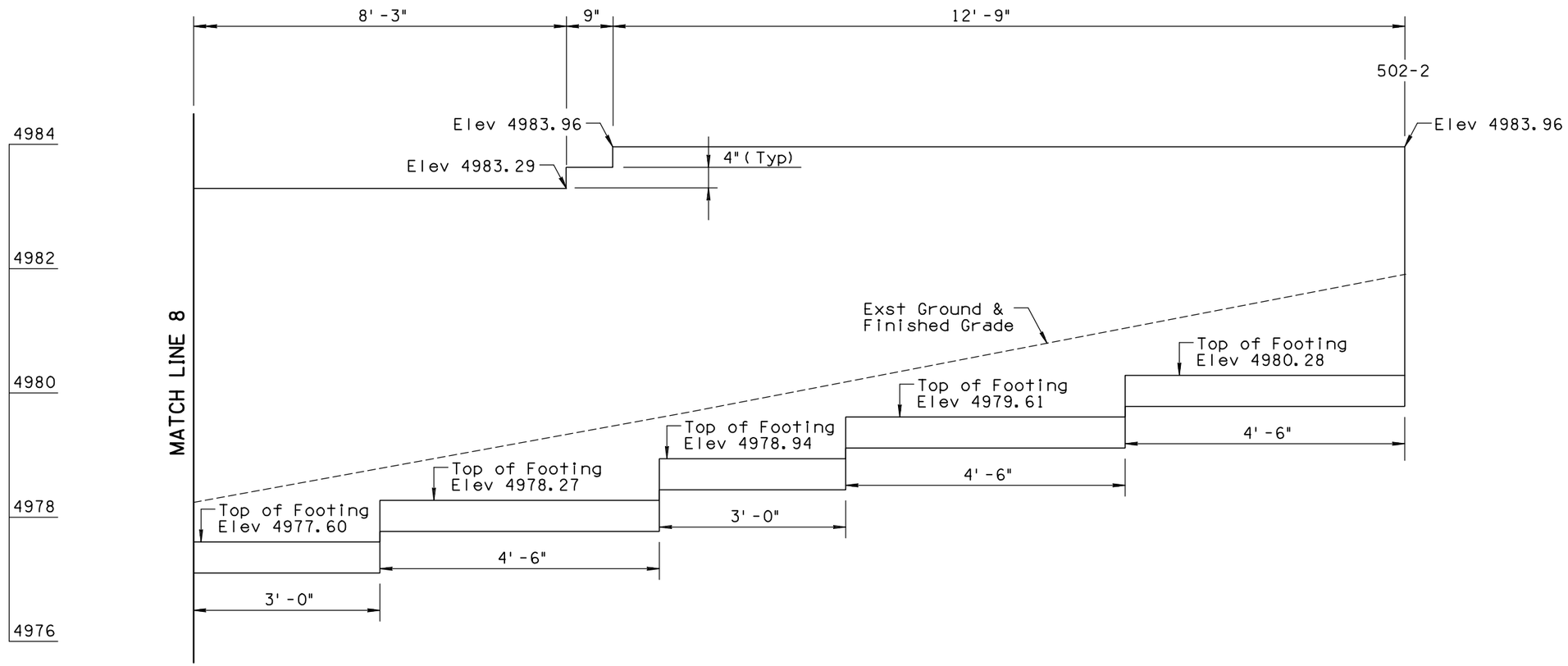

WALL 502

Scale: 1"=1'
Length: 216'-0"
Area: 1151.47 sq ft

NOTES:

1. See Plans for Horizontal Locations
2. See Detail X for Additional Wall Information.
3. Minimum 1 foot of cover over the Wall Footing.

	NAME	DATE
DESIGN	SMG	06/14
DRAWN	CPG	06/14
CHECKED	GPF	06/14

PARSONS BRINCKERHOFF

ARIZONA DEPARTMENT OF TRANSPORTATION
INTERMODAL TRANSPORTATION DIVISION
ROADWAY DESIGN SECTION

RETAINING WALLS

ROUTE | LOCATION PRESCOTT VALLEY PIPELINE & CENTRAL CORE MULTI-USE PATHS (PIPELINE PHASE 2)

Registered Professional Engineer (Civil) CERTIFICATE NO. 49430 GREGORY PATRICK FLY ARIZONA U.S.A.
Expires 3/31/2015

DWG NO. S2-1.25

TRACS NO. SL680 01C | TEA-PRV-0(205)T | ____ OF ____

DATE- LOCATION- REVISIONS- FINISHED PLANS- SURVEY NO.

F.H.W.A. REGION	STATE	PROJECT NO.	SHEET NO.	TOTAL SHEETS	AS BUILT
9	ARIZ.	TEA-PRV-0(205)T			
		PRV 0000 YV			

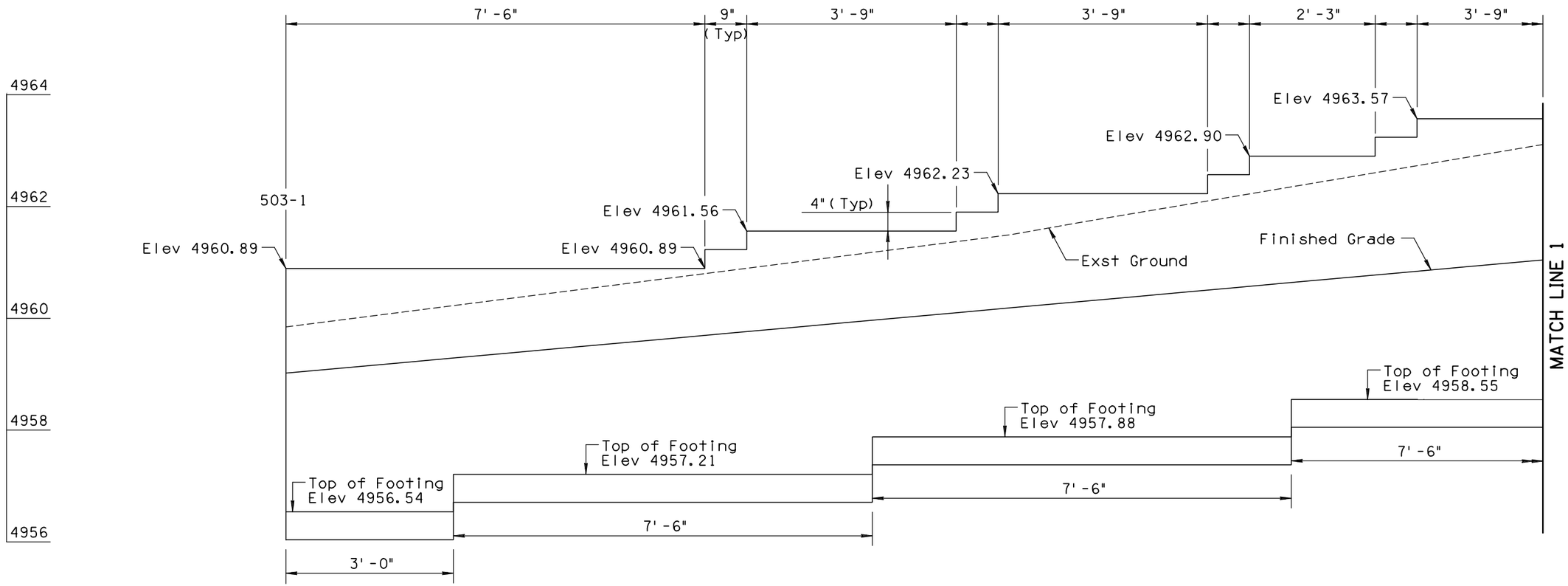

NOTES:

1. See Plans for Horizontal Locations
2. See Detail X for Additional Wall Information.
3. Minimum 1 foot of cover over the Wall Footing.

WALL 503

Scale: 1"=1'
Length: 222'-0"

	NAME	DATE
DESIGN	SMG	06/14
DRAWN	CPG	06/14
CHECKED	GPF	06/14

PARSONS BRINCKERHOFF

ARIZONA DEPARTMENT OF TRANSPORTATION
INTERMODAL TRANSPORTATION DIVISION
ROADWAY DESIGN SECTION

RETAINING WALLS

ROUTE | LOCATION PRESCOTT VALLEY PIPELINE & CENTRAL CORE MULTI-USE PATHS (PIPELINE PHASE 2)

Registered Professional Engineer (Civil) CERTIFICATE NO. 49430 GREGORY PATRICK FLY ARIZONA U.S.A. Expires 3/31/2015

DWG NO. S2-1.26

TRACS NO. SL680 01C | TEA-PRV-0(205)T | ___ OF ___

DATE- LOCATION- REVISIONS- FINISHED PLANS- SURVEY NO.

F.H.W.A. REGION	STATE	PROJECT NO.	SHEET NO.	TOTAL SHEETS	AS BUILT
9	ARIZ.	TEA-PRV-0(205)T			
		PRV 0000 YV			

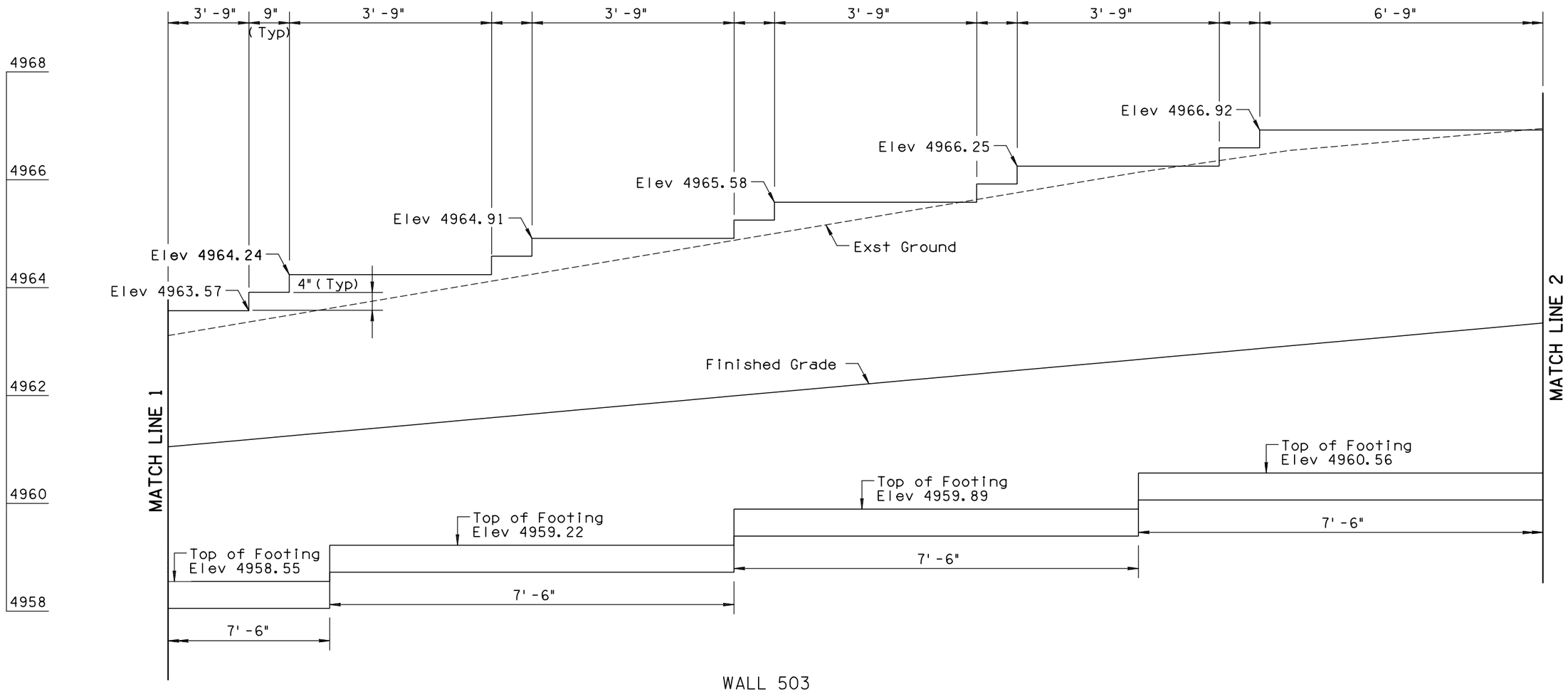

WALL 503

Scale: 1" = 1'
Length: 222'-0"

NOTES:

1. See Plans for Horizontal Locations
2. See Detail X for Additional Wall Information.
3. Minimum 1 foot of cover over the Wall Footing.

	NAME	DATE
DESIGN	SMG	06/14
DRAWN	CPG	06/14
CHECKED	GPF	06/14

PARSONS BRINCKERHOFF

ARIZONA DEPARTMENT OF TRANSPORTATION
INTERMODAL TRANSPORTATION DIVISION
ROADWAY DESIGN SECTION

RETAINING WALLS

ROUTE | LOCATION PRESCOTT VALLEY PIPELINE & CENTRAL CORE MULTI-USE PATHS (PIPELINE PHASE 2)

Registered Professional Engineer (Civil) CERTIFICATE NO. 49450 GREGORY PATRICK FLY ARIZONA U.S.A.
Expires 3/31/2015

DWG NO. S2-1.27

TRACS NO. SL680 01C | TEA-PRV-0(205)T | ___ OF ___

DATE- LOCATION- REVISIONS- FINISHED PLANS- SURVEY NO.

F.H.W.A. REGION	STATE	PROJECT NO.	SHEET NO.	TOTAL SHEETS	AS BUILT
9	ARIZ.	TEA-PRV-0(205)T			
		PRV 0000 YV			

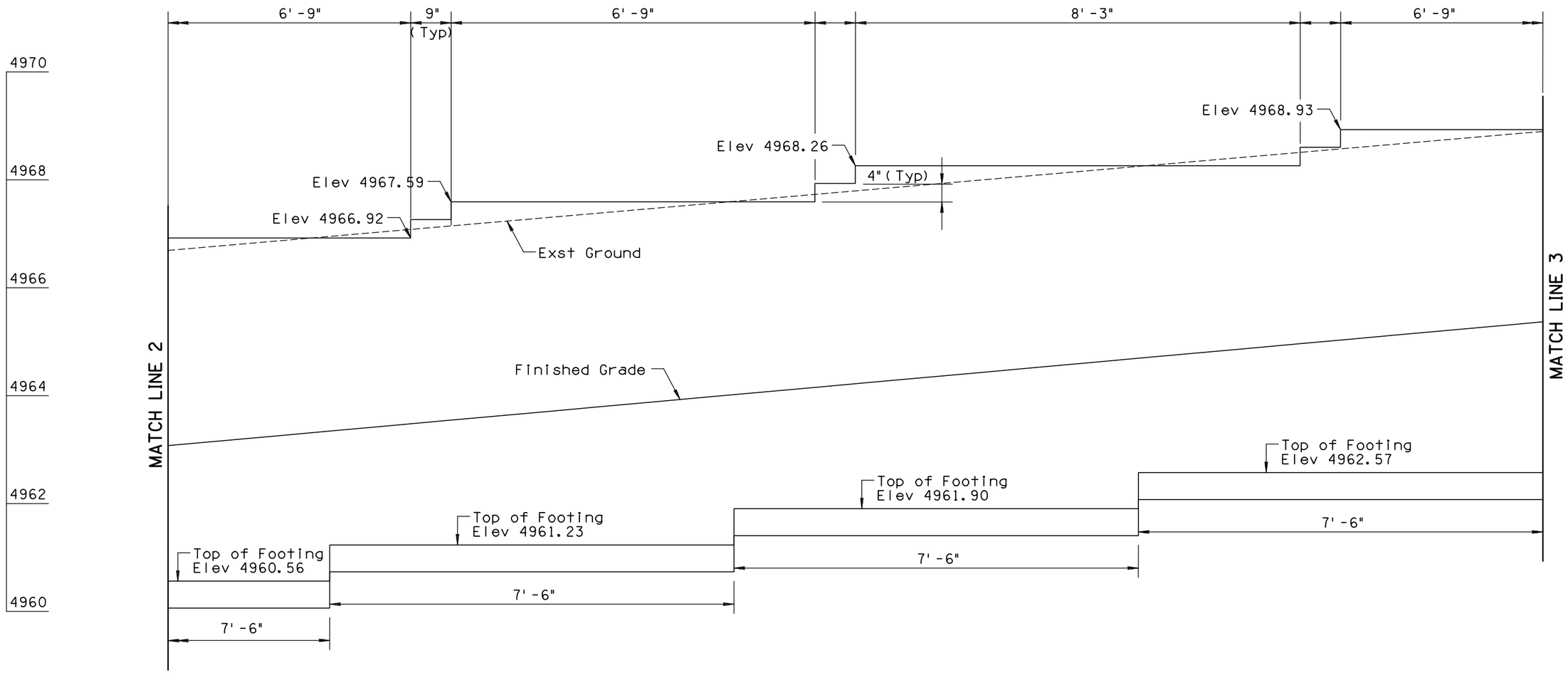

WALL 503

Scale: 1" = 1'
Length: 222'-0"

NOTES:

1. See Plans for Horizontal Locations
2. See Detail X for Additional Wall Information.
3. Minimum 1 foot of cover over the Wall Footing.

	NAME	DATE
DESIGN	SMG	06/14
DRAWN	CPG	06/14
CHECKED	GPF	06/14

PARSONS BRINCKERHOFF

ARIZONA DEPARTMENT OF TRANSPORTATION
INTERMODAL TRANSPORTATION DIVISION
ROADWAY DESIGN SECTION

RETAINING WALLS

ROUTE | LOCATION PRESCOTT VALLEY PIPELINE & CENTRAL CORE MULTI-USE PATHS (PIPELINE PHASE 2)

Registered Professional Engineer (Civil) CERTIFICATE NO. 49450 GREGORY PATRICK FLY ARIZONA U.S.A.
Expires 3/31/2015

DWG NO. S2-1.28

TRACS NO. SL680 01C | TEA-PRV-0(205)T | ___ OF ___

DATE- LOCATION- REVISIONS- FINISHED PLANS- SURVEY NO.

F.H.W.A. REGION	STATE	PROJECT NO.	SHEET NO.	TOTAL SHEETS	AS BUILT
9	ARIZ.	TEA-PRV-0(205)T			
		PRV 0000 YV			

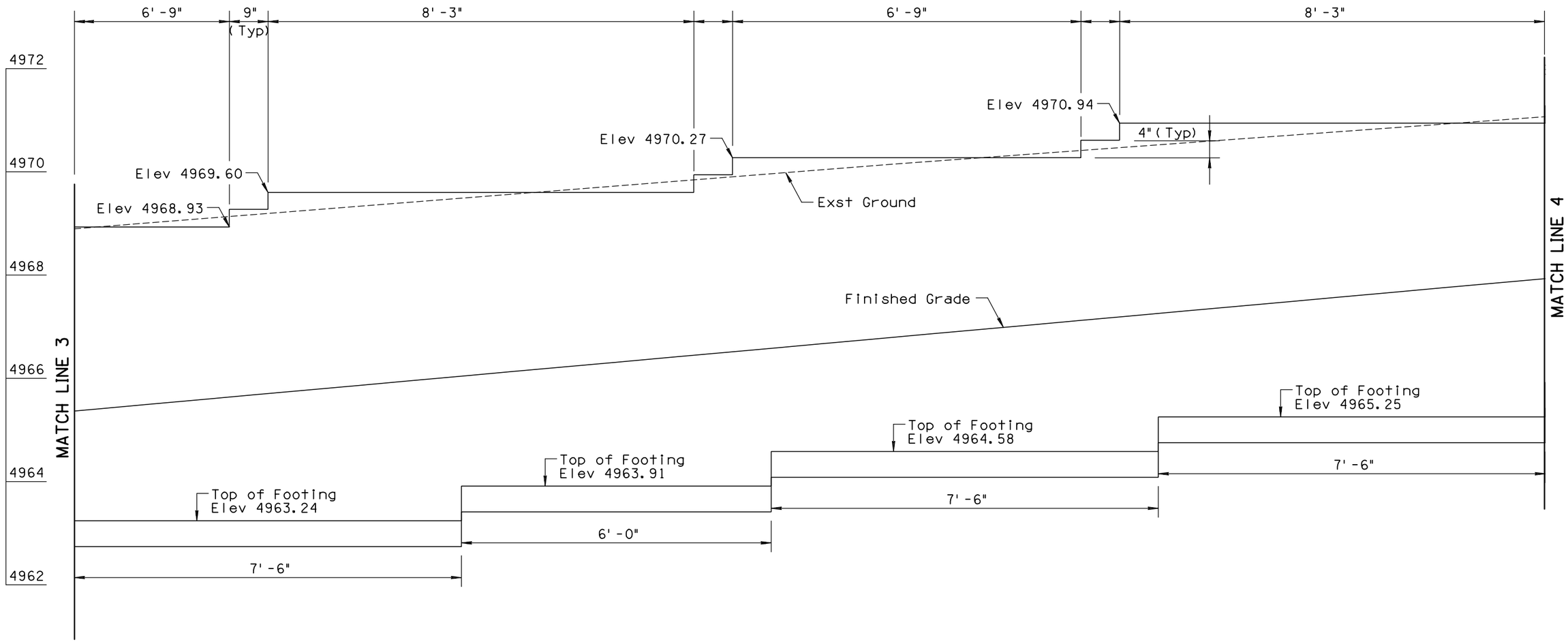

WALL 503

Scale: 1"=1'
Length: 222'-0"

NOTES:

1. See Plans for Horizontal Locations
2. See Detail X for Additional Wall Information.
3. Minimum 1 foot of cover over the Wall Footing.

	NAME	DATE
DESIGN	SMG	06/14
DRAWN	CPG	06/14
CHECKED	GPF	06/14

ARIZONA DEPARTMENT OF TRANSPORTATION
INTERMODAL TRANSPORTATION DIVISION
ROADWAY DESIGN SECTION

PARSONS BRINCKERHOFF

RETAINING WALLS

ROUTE | LOCATION PRESCOTT VALLEY PIPELINE & CENTRAL CORE MULTI-USE PATHS (PIPELINE PHASE 2)

Registered Professional Engineer (Civil) CERTIFICATE NO. 49450 GREGORY PATRICK FLY ARIZONA U.S.A.
Expires 3/31/2015

DWG NO. S2-1.29

TRACS NO. SL680 01C | TEA-PRV-0(205)T | ___ OF ___

DATE- LOCATION- REVISIONS- FINISHED PLANS- SURVEY NO.

F.H.W.A. REGION	STATE	PROJECT NO.	SHEET NO.	TOTAL SHEETS	AS BUILT
9	ARIZ.	TEA-PRV-0(205)T			
		PRV 0000 YV			

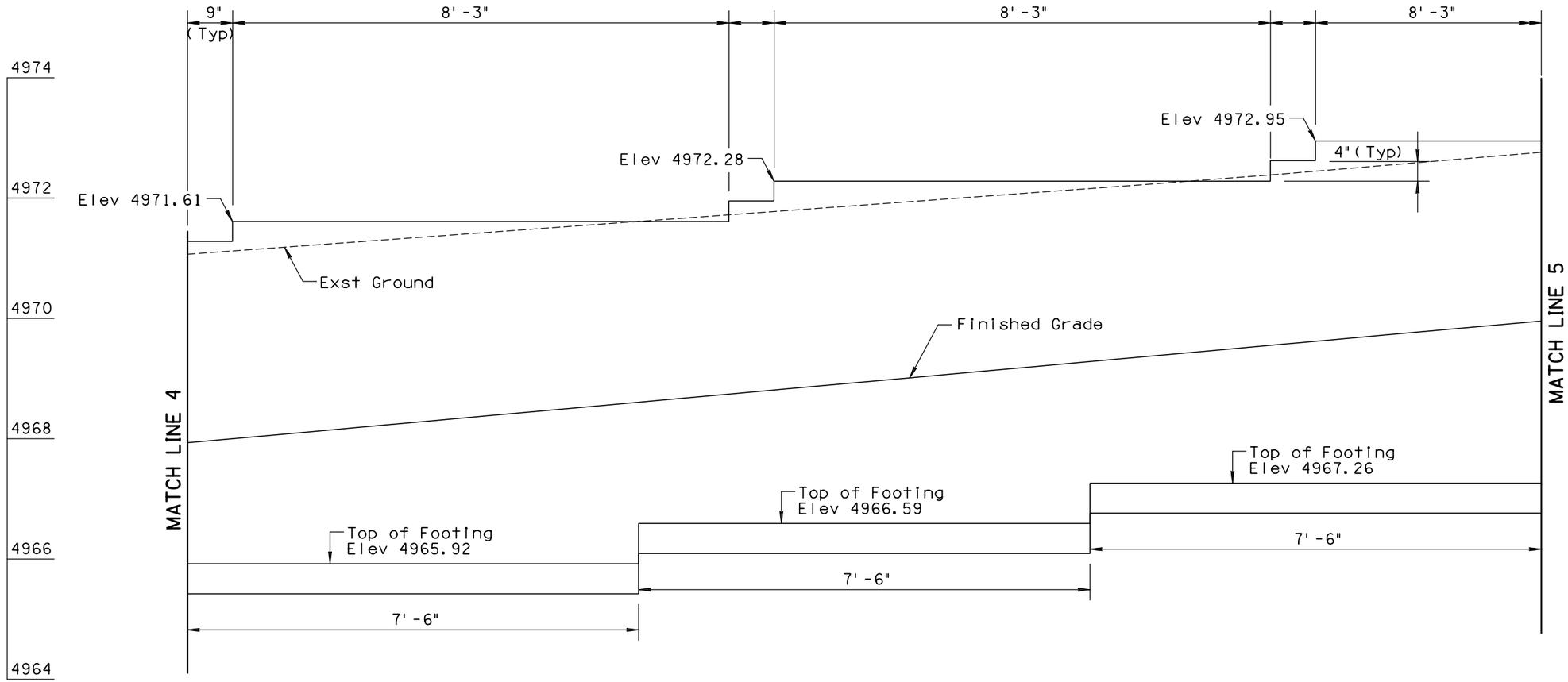

WALL 503

Scale: 1"=1'
Length: 222'-0"

NOTES:

1. See Plans for Horizontal Locations
2. See Detail X for Additional Wall Information.
3. Minimum 1 foot of cover over the Wall Footing.

	NAME	DATE
DESIGN	SMG	06/14
DRAWN	CPG	06/14
CHECKED	GPF	06/14

PARSONS BRINCKERHOFF

ARIZONA DEPARTMENT OF TRANSPORTATION
INTERMODAL TRANSPORTATION DIVISION
ROADWAY DESIGN SECTION

RETAINING WALLS

ROUTE | LOCATION PRESCOTT VALLEY PIPELINE & CENTRAL CORE MULTI-USE PATHS (PIPELINE PHASE 2)

Registered Professional Engineer (Civil) CERTIFICATE NO. 49450 GREGORY PATRICK FLY ARIZONA U.S.A.
Expires 3/31/2015

DWG NO. S2-1.30

TRACS NO. SL680 01C | TEA-PRV-0(205)T | ___ OF ___

DATE- LOCATION- REVISIONS- FINISHED PLANS- SURVEY NO.

F.H.W.A. REGION	STATE	PROJECT NO.	SHEET NO.	TOTAL SHEETS	AS BUILT
9	ARIZ.	TEA-PRV-0(205)T			
		PRV 0000 YV			

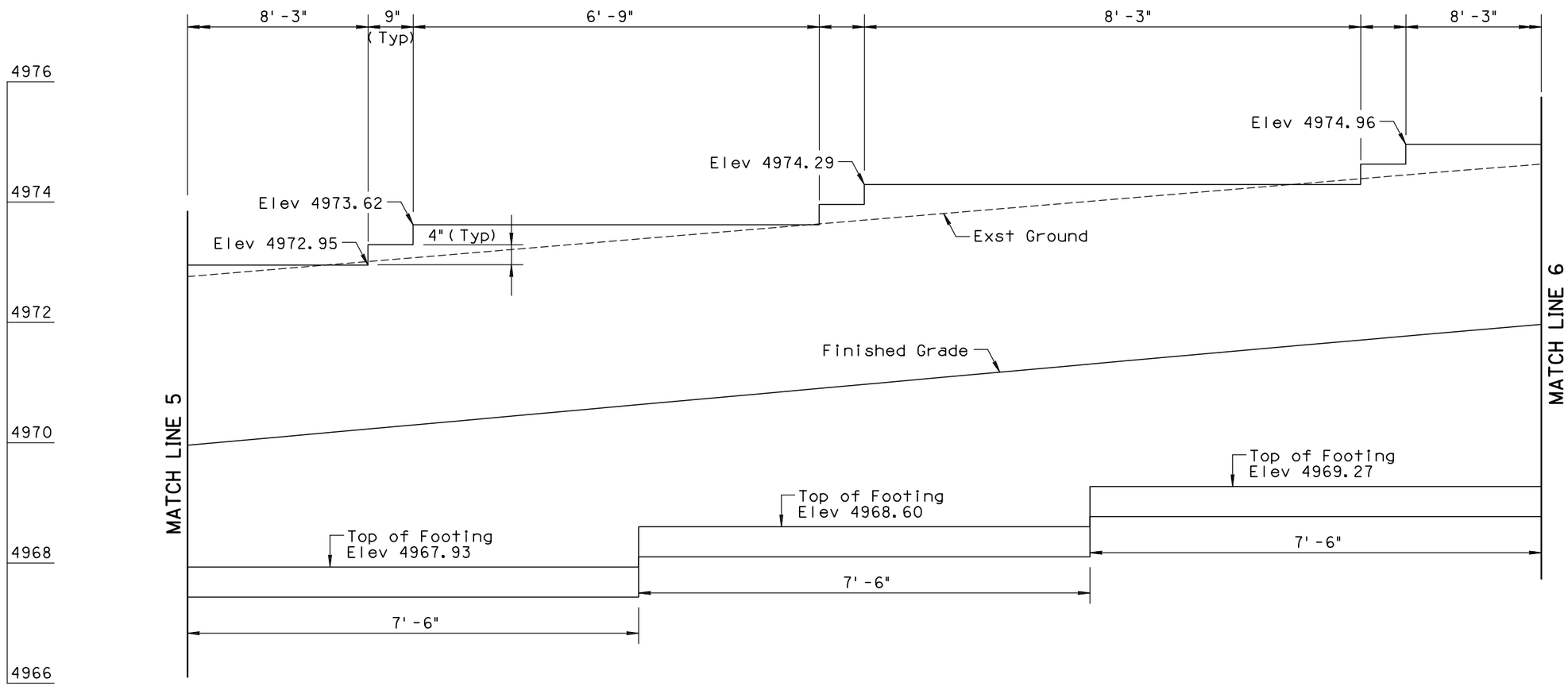

WALL 503

Scale: 1"=1'
Length: 222'-0"

NOTES:

1. See Plans for Horizontal Locations
2. See Detail X for Additional Wall Information.
3. Minimum 1 foot of cover over the Wall Footing.

	NAME	DATE
DESIGN	SMG	06/14
DRAWN	CPG	06/14
CHECKED	GPF	06/14

PARSONS BRINCKERHOFF

ARIZONA DEPARTMENT OF TRANSPORTATION
INTERMODAL TRANSPORTATION DIVISION
ROADWAY DESIGN SECTION

RETAINING WALLS

ROUTE | LOCATION PRESCOTT VALLEY PIPELINE & CENTRAL CORE MULTI-USE PATHS (PIPELINE PHASE 2)

Registered Professional Engineer (Civil) CERTIFICATE NO. 49430 GREGORY PATRICK FLY ARIZONA U.S.A.
Expires 3/31/2015

DWG NO. S2-1.31

TRACS NO. SL680 01C | TEA-PRV-0(205)T | ___ OF ___

DATE- LOCATION- REVISIONS- FINISHED PLANS- SURVEY NO.

F.H.W.A. REGION	STATE	PROJECT NO.	SHEET NO.	TOTAL SHEETS	AS BUILT
9	ARIZ.	TEA-PRV-0(205)T			
		PRV 0000 YV			

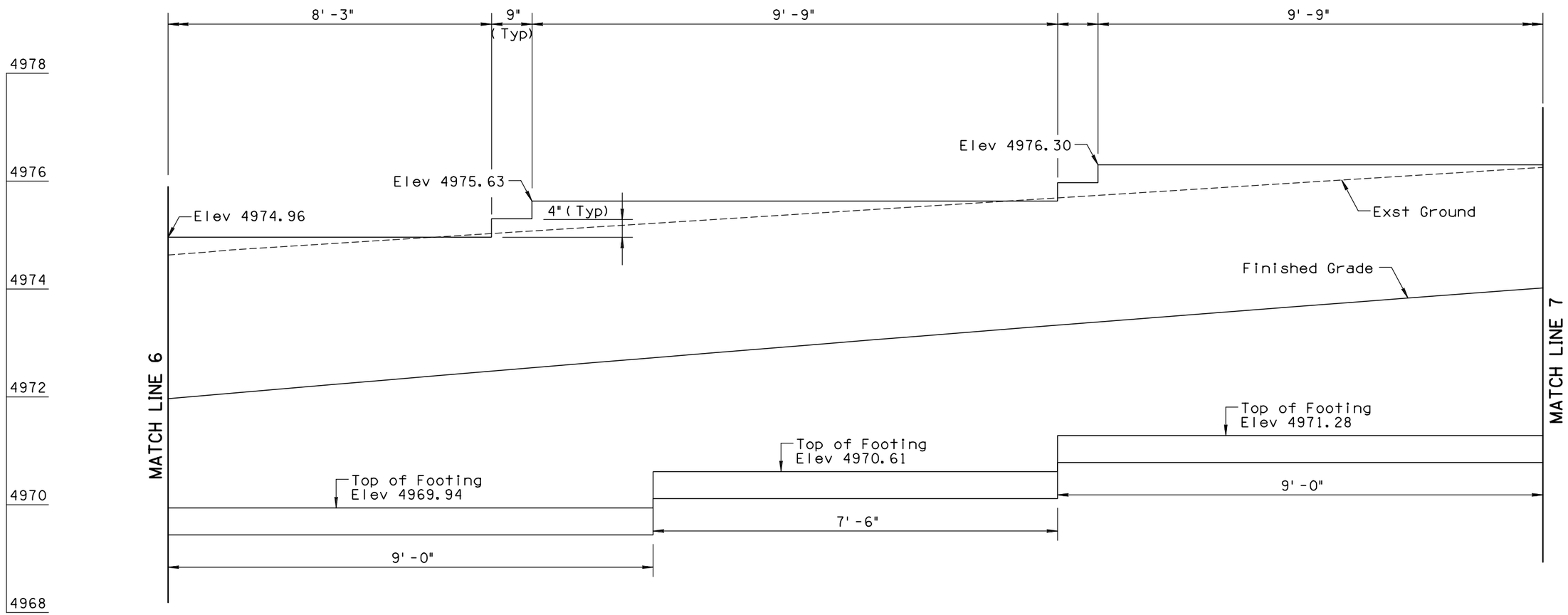

WALL 503

Scale: 1"=1'
Length: 222'-0"

NOTES:

1. See Plans for Horizontal Locations
2. See Detail X for Additional Wall Information.
3. Minimum 1 foot of cover over the Wall Footing.

	NAME	DATE
DESIGN	SMG	06/14
DRAWN	CPG	06/14
CHECKED	GPF	06/14

PARSONS BRINCKERHOFF

ARIZONA DEPARTMENT OF TRANSPORTATION
INTERMODAL TRANSPORTATION DIVISION
ROADWAY DESIGN SECTION

RETAINING WALLS

ROUTE | LOCATION PRESCOTT VALLEY PIPELINE & CENTRAL CORE MULTI-USE PATHS (PIPELINE PHASE 2)

Registered Professional Engineer (Civil) CERTIFICATE NO. 49430 GREGORY PATRICK FLY ARIZONA U.S.A.
Expires 3/31/2015

DWG NO. S2-1.32

TRACS NO. SL680 01C | TEA-PRV-0(205)T | ___ OF ___

F.H.W.A. REGION	STATE	PROJECT NO.	SHEET NO.	TOTAL SHEETS	AS BUILT
9	ARIZ.	TEA-PRV-0(205)T			
		PRV 0000 YV			

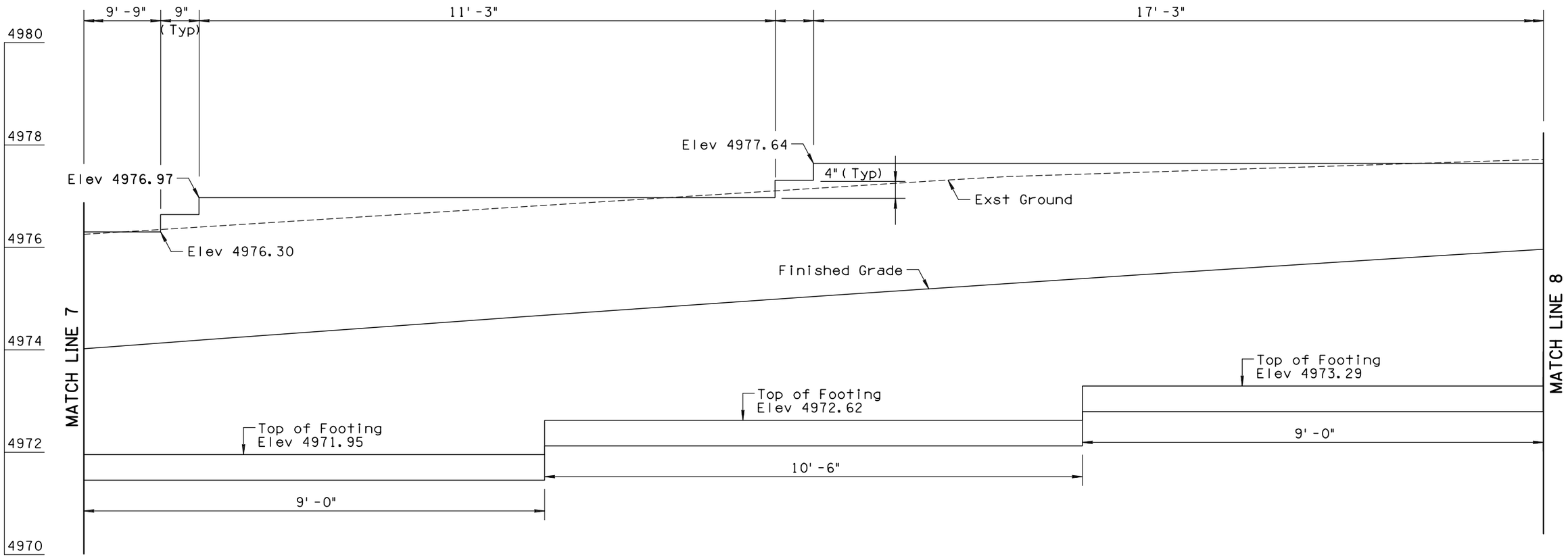

WALL 503

Scale: 1"=1'
Length: 222'-0"

NOTES:

1. See Plans for Horizontal Locations
2. See Detail X for Additional Wall Information.
3. Minimum 1 foot of cover over the Wall Footing.

	NAME	DATE
DESIGN	SMG	06/14
DRAWN	CPG	06/14
CHECKED	GPF	06/14

PARSONS BRINCKERHOFF

ARIZONA DEPARTMENT OF TRANSPORTATION
INTERMODAL TRANSPORTATION DIVISION
ROADWAY DESIGN SECTION

RETAINING WALLS

ROUTE | LOCATION PRESCOTT VALLEY PIPELINE & CENTRAL CORE MULTI-USE PATHS (PIPELINE PHASE 2)

Registered Professional Engineer (Civil) CERTIFICATE NO. 49450 GREGORY PATRICK FLY ARIZONA U.S.A. Expires 3/31/2015

DWG NO. S2-1.33

TRACS NO. SL680 01C | TEA-PRV-0(205)T | ___ OF ___

9/12/2014 T:\Prescott_MUP\SL641_ph2\Structures\SL641_wpln32.dgn

DATE- LOCATION- REVISIONS- FINISHED PLANS- SURVEY NO.

F.H.W.A. REGION	STATE	PROJECT NO.	SHEET NO.	TOTAL SHEETS	AS BUILT
9	ARIZ.	TEA-PRV-0(205)T			
		PRV 0000 YV			

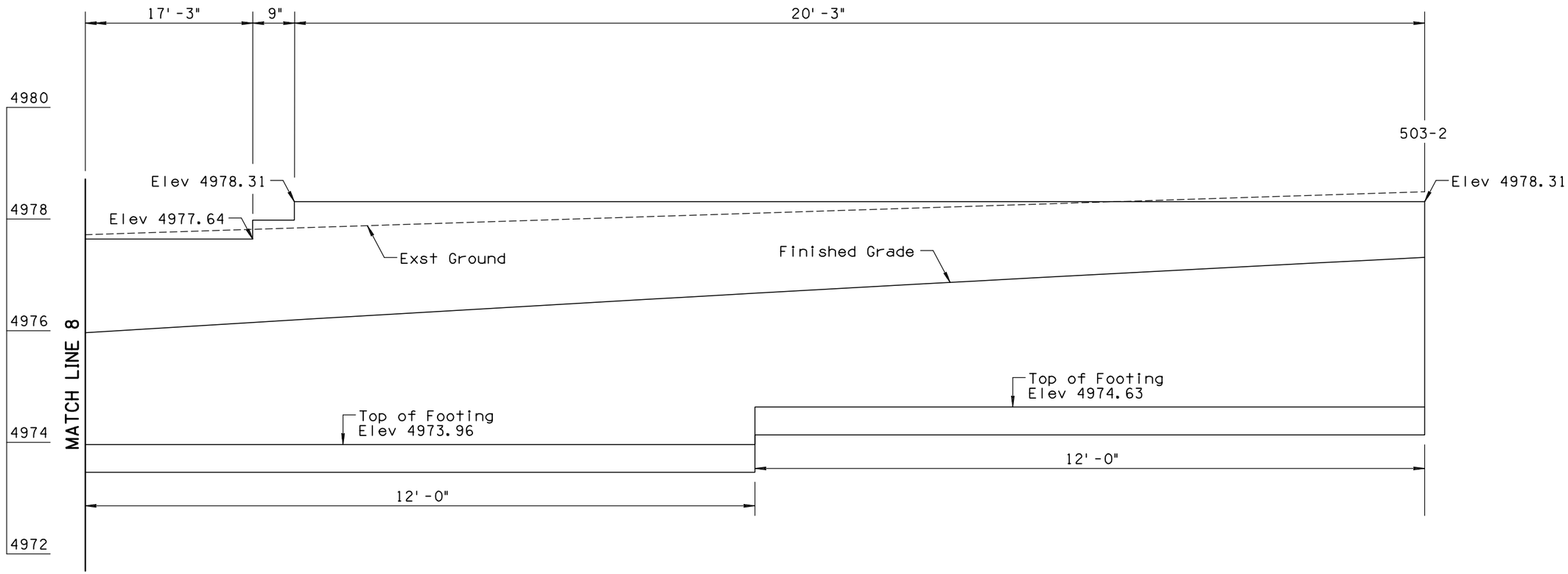

NOTES:

1. See Plans for Horizontal Locations
2. See Detail X for Additional Wall Information.
3. Minimum 1 foot of cover over the Wall Footing.

WALL 503

Scale: 1"=1'
Length: 222'-0"
Area: 1148.20 sq ft

	NAME	DATE
DESIGN	SMG	06/14
DRAWN	CPG	06/14
CHECKED	GPF	06/14

PARSONS BRINCKERHOFF

ARIZONA DEPARTMENT OF TRANSPORTATION
INTERMODAL TRANSPORTATION DIVISION
ROADWAY DESIGN SECTION

RETAINING WALLS

ROUTE | LOCATION PRESCOTT VALLEY PIPELINE & CENTRAL CORE MULTI-USE PATHS (PIPELINE PHASE 2)

Registered Professional Engineer (Civil) CERTIFICATE NO. 49450 GREGORY PATRICK FLY ARIZONA U.S.A.
Expires 3/31/2015

DWG NO. S2-1.34

TRACS NO. SL680 01C | TEA-PRV-0(205)T | ___ OF ___

DATE- LOCATION- REVISIONS- FINISHED PLANS- SURVEY NO.

F.H.W.A. REGION	STATE	PROJECT NO.	SHEET NO.	TOTAL SHEETS	AS BUILT
9	ARIZ.	TEA-PRV-0(205)T			
		PRV 0000 YV			

PART 1 - To be completed by the Landscape Architect or Design Engineer

I. PROJECT DESCRIPTION

A. Owner Name and Address:

Arizona Department of Transportation
205 South 17th Avenue
Phoenix, Arizona 85007-3213

B. Project TRACS Number: SL680 01C

C. Project Location: Prescott Valley Pipeline Phase 2

City: Prescott Valley County: Yavapai

Beginning Latitude (NAD 83): 34°36'50" N
Beginning Longitude (NAD 83): 112°18'46" W

Ending Latitude (NAD 83): 34°37'16" N
Ending Longitude (NAD 83): 112°18'59" W

To obtain the project latitude/longitude data, refer to the Flash Earth web link below (Bing Maps with labels): http://www.flashearth.com/

D. Project Description: New multi-use path construction and corresponding improvements.

II. HYDROLOGIC INFORMATION

A. Project Size:
Length (Mi.) 0.77
Area (Ac.) 1.40

B. Area to be Graded (Ac.) *: 1.82
* Blading of the shoulder build-up area is considered as grading and ground disturbance and should be covered by stormwater and/or other environmental regulations.

C. Percentage of the site that is impervious before and after construction:
Percentage before Construction: 0.9
Percentage after Construction: 0.9

D. Receiving Water(s), refer to the Arizona Department of Water Resources Web Link below (USGS Topo) : https://glsweb.azwater.gov/WellRegistry/Default.aspx

Agua Fria River

III. PRESERVATION OF EXISTING VEGETATION

A. In accordance with the specifications, existing vegetation will be preserved. Clearing limits shall be confined to areas that require grading. Existing vegetation outside the boundaries of the cleared area shall be protected from damage by construction activities. Existing trees within the area to be cleared shall be preserved and protected, wherever possible.

IV. SOIL STABILIZATION MEASURES

A. All disturbed soil, which will not be paved, riprapped or otherwise covered to prevent erosion, will be revegetated and/or landscaped in accordance with the project plans and specifications.

B. Scheduling of the revegetation effort can be found on PART 2 of this sheet under SCHEDULE OF MAJOR ACTIVITIES.

V. MEASURES TO CONTROL EROSION AND SEDIMENT

A. Temporary Erosion and Sediment Controls: (Refer to the Following SWPPP Site Plan and Specifications)

- ___ Erosion Control Mattings
- ___ Temporary Diversion Dikes
- ___ Check Dams
- ___ Rock Inlet/Outlet Protection
- ___ Sediment Control Berms
- ___ Silt Fences
- X Wattles (Excelsior/Straw)
- ___ Excelsior Logs / Sediment Logs
- ___ Seeding (Class II with mulch)
- ___ Others Describe:

B. Permanent Erosion and Sediment Controls and Post-construction Storm Water Management Measures: (Refer to SWPPP Site Plan and Specifications)

- ___ Crown Ditch/Dike
- ___ Rock Protection
- ___ Rock Riprap Channel Lining
- ___ Sediment Basin
- ___ Embankment Curb
- ___ Spillways and Downdrains
- ___ Minibenching
- X Seeding established as a perennial vegetative cover with a density of 70% of the native background vegetative cover.
- ___ Others Describe:

VI. MAINTENANCE AND INSPECTIONS

A. Frequency of Inspections:

___ At least once every 7 calendar days, OR
X Every 14 calendar days and within 24 hours after a rainfall of 0.5 inches (12.7 mm) or more.

NOTE: RAINFALL GAUGE TO BE KEPT ON-SITE TO DETERMINE DEPTH OF RAINFALL

B. Inspection Procedure:

ADOT's Contractor's Inspection Log and Compliance Evaluation Report (CER) will be completed by the contractor or his representative and will be kept on file for 3 years. A signed copy of the CER will be sent to the ADOT resident engineer. If repairs are necessary, they shall be initiated within 24 hours of the inspection report.

PART 2 - To be completed by ADOT & CONTRACTOR

http://www.azdot.gov/Inside_adot/OES/Water_Quality/Stormwater/Docs/swppp_construction_template.dot

I. SCHEDULE OF MAJOR ACTIVITIES

A. Project Schedule:

Start Date:

End Date:

B. Construction Sequencing Schedule: (Attach Additional Sheets)
Construction Activities

II. INVENTORY OF POLLUTANTS

A. The materials or substances checked below are expected to be onsite during construction:

- ___ Concrete
- ___ Asphalt
- ___ Paints
- ___ Fertilizer
- ___ Herbicides
- ___ Wood
- ___ Fuel
- ___ Oil
- ___ Others, List:

III. POLLUTION CONTROL MEASURES

A. Other Best Management Practices:

- ___ Wind Erosion and Dust Control
- ___ Solid Waste Management
- ___ Equipment Maintenance Procedures
- ___ Designated Washout Areas
- ___ Stabilized Construction Entrance
- ___ Protected Chemical and Material Storage Area
- ___ Other, Describe:

IV. SPILL PREVENTION AND RESPONSE

A. Spill Prevention:
The procedures outlined in the Best Management Practices listed under Pollution Control Measures will be followed to prevent and contain spills of hazardous material. These preventative action include BMP's on equipment maintenance and proper handling, storage and disposal of chemicals and materials. All manufacturer's recommendations for usage, clean-up and disposal shall be followed.

B. Spill Response:
In the event of any accidental spill of chemicals or hazardous materials, contact the ADOT Traffic Operations Center at 800-379-3701. If a reportable quantity is discharged into the storm water, ADOT shall contact the National Response Center and document the spill to the EPA. ADOT's Hazardous Materials Specialist shall provide instructions.

V. CERTIFICATION OF COMPLIANCE WITH FEDERAL, STATE AND LOCAL REGULATIONS

A. This Storm Water Pollution Prevention Plan (SWPPP) has been prepared in accordance with the latest updated version of ADOT's EROSION AND POLLUTION CONTROL MANUAL FOR HIGHWAY DESIGN AND CONSTRUCTION, published by ADOT Intermodal Transportation Division.

___ SWPPP is in compliance with other Federal, State Laws, or Local Regulations.

VI. POLLUTION PREVENTION PLAN CERTIFICATION

A. I certify under penalty of law that I have personally examined and am familiar with the information submitted in this application and all attachments and that, based on my inquiry of those persons immediately responsible for obtaining the information contained in the application, I believe that the information is true, accurate and complete. I am aware that there are significant penalties for submitting false information, including the possibility of fine and imprisonment. (Applies to VI. B., C., and D)

B. The operator/contractor as defined in AZPDES should sign the SWPPP in accordance with CGP Part VIII. J, and retain the SWPPP on-site at the construction site or other location easily accessible during normal business hours.

Signature: (operator/contractor)
Date:
Name:
Title:
Company:

C. ADOT Resident Engineer
Signature: (owner)
Date:
Name:
Title:
ADOT District:

D. MUNICIPALITY for Municipal Separate Storm Sewer System (MS4)
Signature:
Date:
Name:
Title:
MS4 Name:

VII. OTHER REQUIREMENTS

A. A copy of the General Permit and NOI are attached in accordance to AZPDES General Permit for Storm Water Discharges From Construction Activities To The Water Of The United States.

B. Projects that are within ¼ mile of impaired or unique waters require the SWPPP to be sent to ADEQ in combination with the NOI. Refer to the Arizona Outstanding, Impaired and Not-Attaining Waters *.PDF Maps by County web link: https://www.azdot.gov/Inside_adot/OES/Water_Quality/Stormwater/outstanding_unique_waters_maps_by_county.asp

C. For further requirements, check the ADEQ's Smart NOI Web Page: https://az.gov/app/smartnoi/

	NAME	DATE
DESIGN	SMG	06/14
DRAWN	CPG	06/14
CHECKED	GPF	06/14

PARSONS BRINCKERHOFF

ARIZONA DEPARTMENT OF TRANSPORTATION
INTERMODAL TRANSPORTATION DIVISION
ROADWAY DESIGN SECTION

AZPDES SWPPP INDEX SHEET

Registered Professional Engineer (Civil) CERTIFICATE NO. 49430 GREGORY PATRICK FLY ARIZONA U.S.A. Expires 3/31/2015

ROUTE | LOCATION: PRESCOTT VALLEY PIPELINE & CENTRAL CORE MULTI-USE PATHS (PIPELINE PHASE 2)

DWG NO. E2-1.01

TRACS NO. SL680 01C | TEA-PRV-0(205)T | ___ OF ___

DATE- LOCATION- REVISIONS- FINISHED PLANS- SURVEY NO.

F.H.W.A. REGION	STATE	PROJECT NO.	SHEET NO.	TOTAL SHEETS	AS BUILT
9	ARIZ.	TEA-PRV-0(205)T			
		PRV 0000 YV			

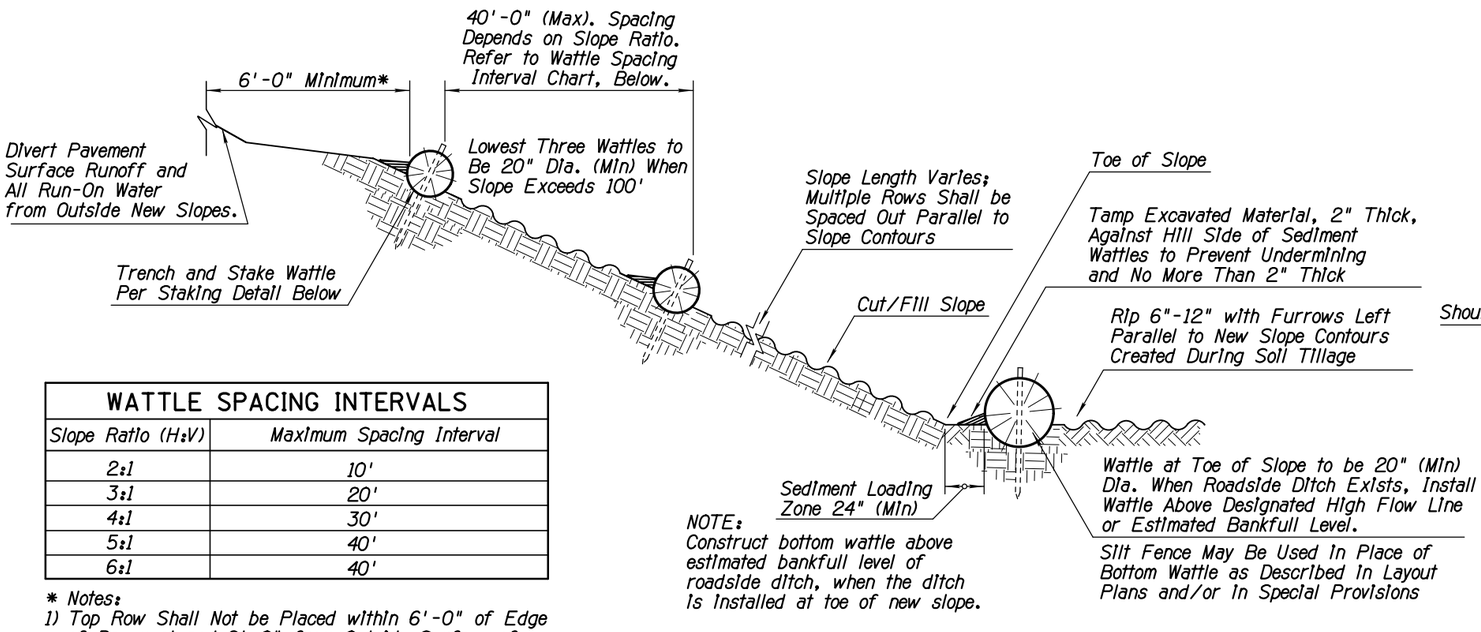

NOTE:
Construct bottom wattle above estimated bankfull level of roadside ditch, when the ditch is installed at toe of new slope.

SECTION (NTS)

WATTLE SPACING INTERVALS	
Slope Ratio (H:V)	Maximum Spacing Interval
2:1	10'
3:1	20'
4:1	30'
5:1	40'
6:1	40'

* Notes:
1) Top Row Shall Not be Placed within 6'-0" of Edge of Pavement and 9'-0" from Outside Surface of Barrier.
2) For erosive soils, place rows of wattles closer together.
3) For soils with low erosive potential, place rows of wattles further apart.

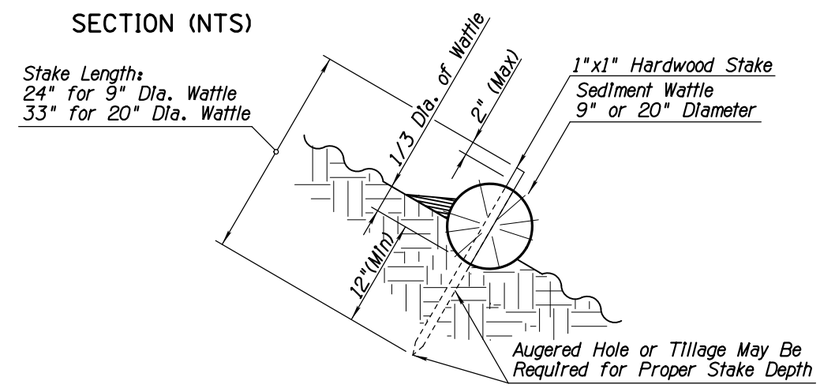

SEDIMENT WATTLE STAKING DETAIL (NTS)

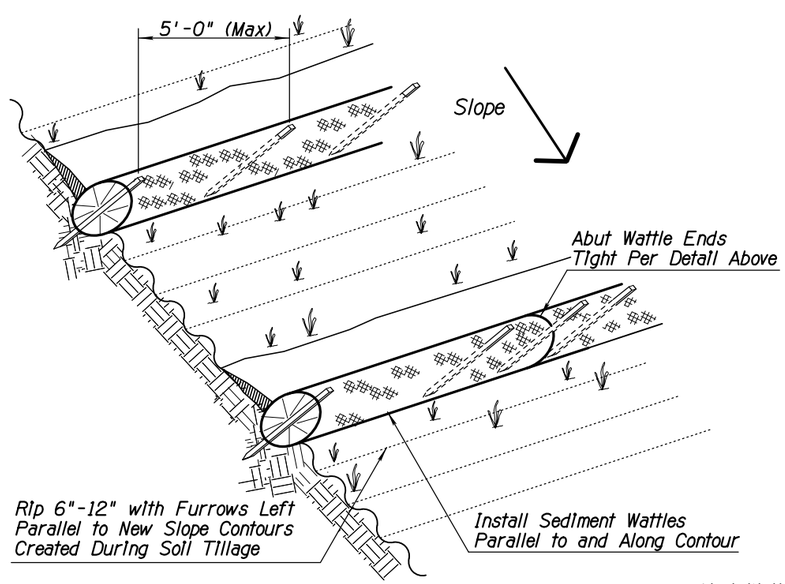

SEDIMENT WATTLE LAYOUT (NTS)

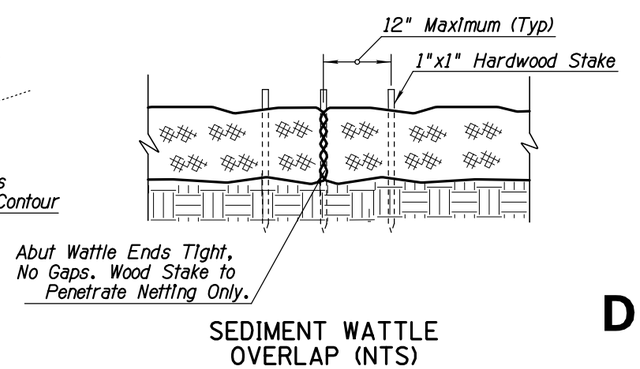

SEDIMENT WATTLE OVERLAP (NTS)

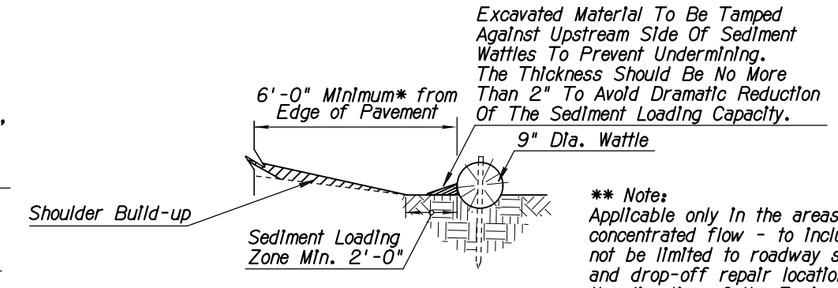

** Note:
Applicable only in the areas of concentrated flow - to include but not be limited to roadway sag spots and drop-off repair locations as per the direction of the Engineer.

NEW SHOULDER BUILDUP ** PROTECTION SECTION (NTS)

NOTES:

1. Install Sediment Wattles as slopes are constructed to grade or as directed by the Engineer. Select, Install and maintain in conformance with manufacturers' specifications to meet site conditions for slope protection and in accordance with good engineering practices. No Sediment Wattles shall be installed in urban freeway medians, nor where cable barrier systems are employed.
2. Sediment Wattles shall be in continuous contact with trench bottom and sides. Do not overlap wattle ends on top of each other. A 20" Dia. wattle may be made from 2-3 rolled excelsior or straw blankets.
3. Butt adjoining wattles tightly against each other. Drive the first end stake of the second wattle at an angle toward the first wattle to help abut them tightly.
4. Repair any rills or gullies promptly. Make field adjustments and corrections of Wattle BMP immediately if it is causing flooding, erosion, and/or affecting roadway safety.
5. Construction of cut slopes 2:1 and steeper in soil and rock materials that can be ripped shall be constructed, whenever possible, by Minibenching. Refer to Slope Minibenching BMP Detail.
6. Loosening surface soil is not required where Minibenches are used. For seeded areas, tillage shall be performed to form minor ridges and furrows parallel to new slope contours and as specified in Section 805 of the Standard Specifications and these special provisions.
7. Divert and direct run-on water from outside of the slopes to the spillways and/or rock riprap/rock mulch. Diversion dikes and/or ditches are necessary on natural undisturbed slopes beyond the top limits of new slopes to divert run-on water.
8. Installation and maintenance of Sediment Wattle BMPs shall not negatively impact traffic safety, nor the designed function of roadway or bridge drainage facilities.
9. Install and maintain Sediment Wattle BMPs to carry the stormwater of at least 2-year, 24-hour events.
10. The Sediment Wattle BMP's pay/bid item shall include all materials used for this BMP: all ground preparation, furnishing, installing, maintenance, final removal, and disposal of this temporary BMP, as well as returning the area to an acceptable condition as approved by the Engineer.
11. Refer to Standard Specification Section 810-2.06(C) for Sediment Wattle material specifications.
12. Make field adjustments and corrections to ensure NO sensitive biological resources (native species / habitats) will be adversely impacted.

DETAIL ES2
SEDIMENT WATTLE

	NAME	DATE
DESIGN	SMG	06/14
DRAWN	CPG	06/14
CHECKED	GPF	06/14

ARIZONA DEPARTMENT OF TRANSPORTATION
INTERMODAL TRANSPORTATION DIVISION
ROADWAY DESIGN SECTION

PARSONS BRINCKERHOFF

STORMWATER QUALITY PROTECTION & EROSION/SEDIMENT CONTROL DETAILS

ROUTE | LOCATION: PRESCOTT VALLEY PIPELINE & CENTRAL CORE MULTI-USE PATHS (PIPELINE PHASE 2)

Registered Professional Engineer (Civil) CERTIFICATE NO. 49430 GREGORY PATRICK FLY ARIZONA U.S.A. Expires 3/31/2015

DWG NO. E2-1.02

TRACS NO. SL680 01C | TEA-PRV-0(205)T | ____ OF ____

DATE- LOCATION- REVISIONS- FINISHED PLANS- SURVEY NO.

9/12/2014 T:\Prescott_MUP\SL641_ph2\SWPPP\SL641wattle.dgn

F.H.W.A. REGION	STATE	PROJECT NO.	SHEET NO.	TOTAL SHEETS	AS BUILT
9	ARIZ.	TEA-PRV-0(205)T			
		PRV 0000 YV			

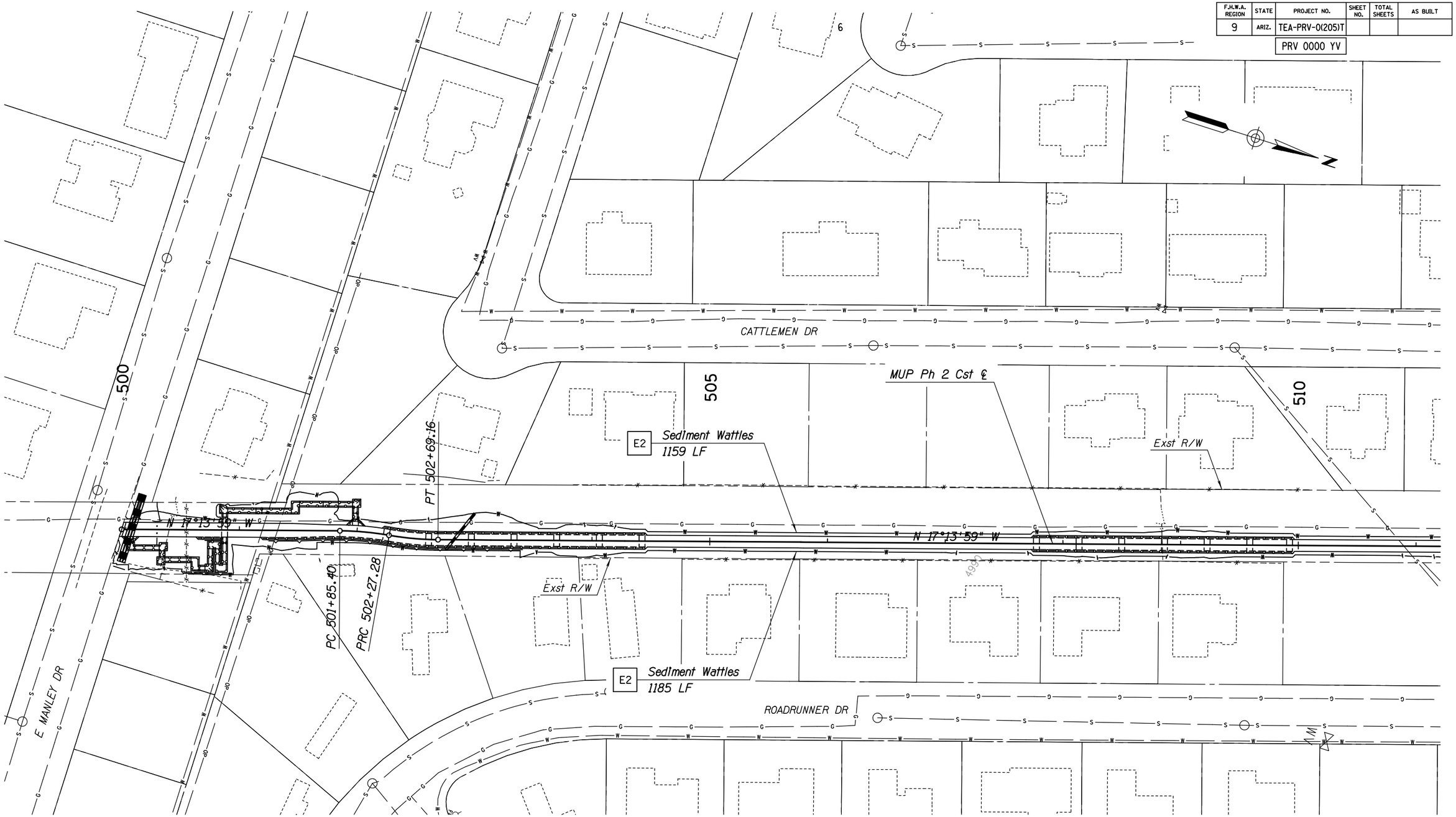

LEGEND:

Sediment Wattle

	NAME	DATE
DESIGN	SMG	06/14
DRAWN	CPG	06/14
CHECKED	GPF	06/14

PARSONS BRINCKERHOFF

ARIZONA DEPARTMENT OF TRANSPORTATION
INTERMODAL TRANSPORTATION DIVISION
ROADWAY DESIGN SECTION

EROSION CONTROL PLAN
Sta 500+00 to Sta 511+00

ROUTE | LOCATION PRESCOTT VALLEY PIPELINE & CENTRAL CORE MULTI-USE PATHS (PIPELINE PHASE 2)

Registered Professional Engineer (Civil) CERTIFICATE NO. 49450 GREGORY PATRICK FLY ARIZONA U.S.A.
Expires 3/31/2015

DWG NO. E2-2.01

TRACS NO. SL680 01C | TEA-PRV-0(205)T | ___ OF ___

9/12/2014 T:\Prescott_MUP\SL641_ph2\SWPPP\SL641-ec01.dgn

DATE- LOCATION- REVISIONS- FINISHED PLANS- SURVEY NO.

F.H.W.A. REGION	STATE	PROJECT NO.	SHEET NO.	TOTAL SHEETS	AS BUILT
9	ARIZ.	TEA-PRV-0(205)T			

PRV 0000 YV

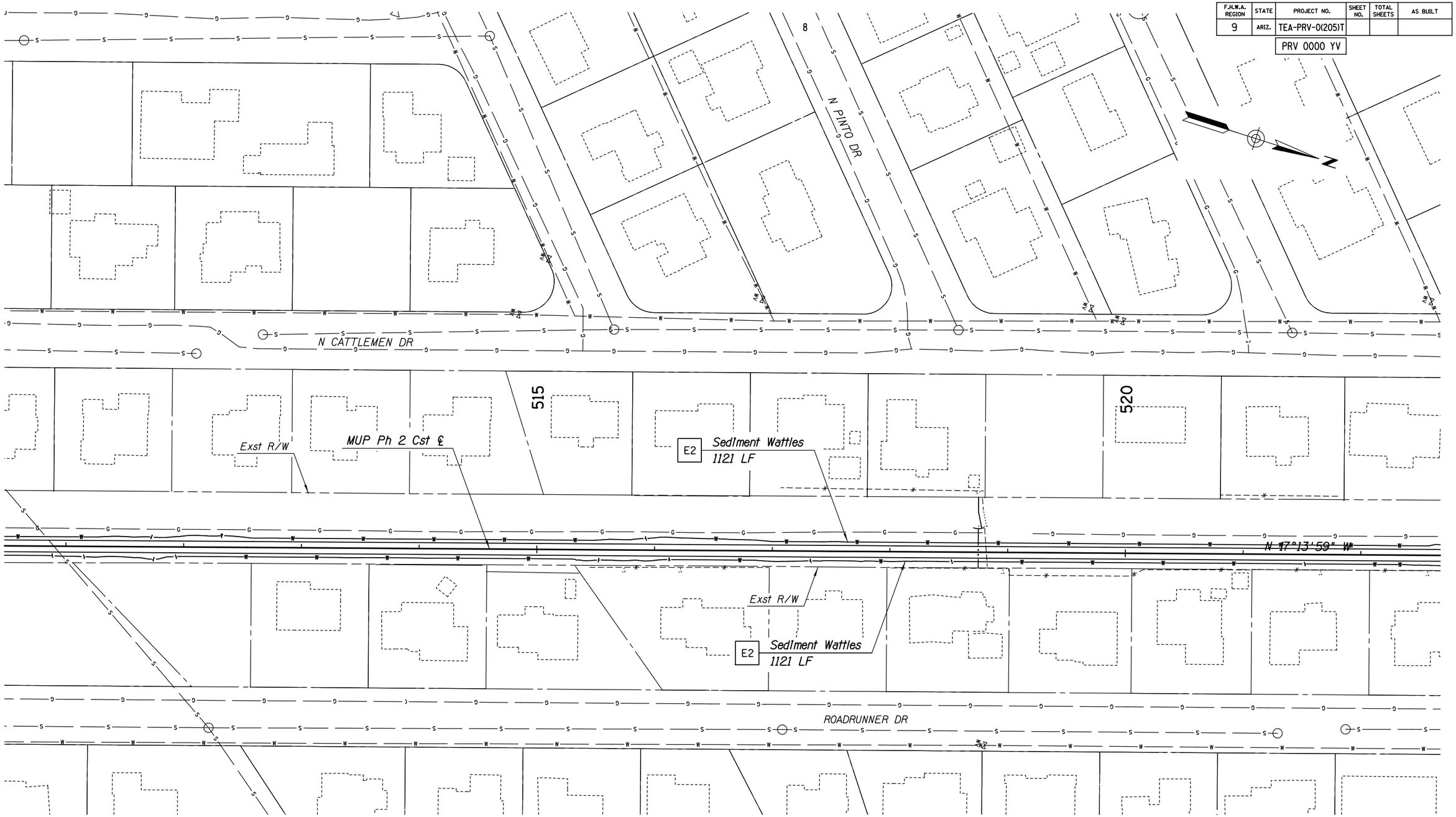

LEGEND:

Sediment Wattle

	NAME	DATE
DESIGN	SMG	06/14
DRAWN	CPG	06/14
CHECKED	GPF	06/14

PARSONS BRINCKERHOFF

ARIZONA DEPARTMENT OF TRANSPORTATION
INTERMODAL TRANSPORTATION DIVISION
ROADWAY DESIGN SECTION

EROSION CONTROL PLAN
Sta 511+00 to Sta 522+20

ROUTE | LOCATION: PRESCOTT VALLEY PIPELINE & CENTRAL CORE MULTI-USE PATHS (PIPELINE PHASE 2)

Registered Professional Engineer (Civil) CERTIFICATE NO. 49430 GREGORY PATRICK FLY ARIZONA U.S.A.
Expires 3/31/2015

DWG NO. E2-2.02

TRACS NO. SL680 01C | TEA-PRV-0(205)T | ___ OF ___

9/12/2014 T:\Prescott_MUP\SL641_ph2\SWPPP\SL641-ec02.dgn

F.H.W.A. REGION	STATE	PROJECT NO.	SHEET NO.	TOTAL SHEETS	AS BUILT
9	ARIZ.	TEA-PRV-0(205)T			
		PRV 0000 YV			

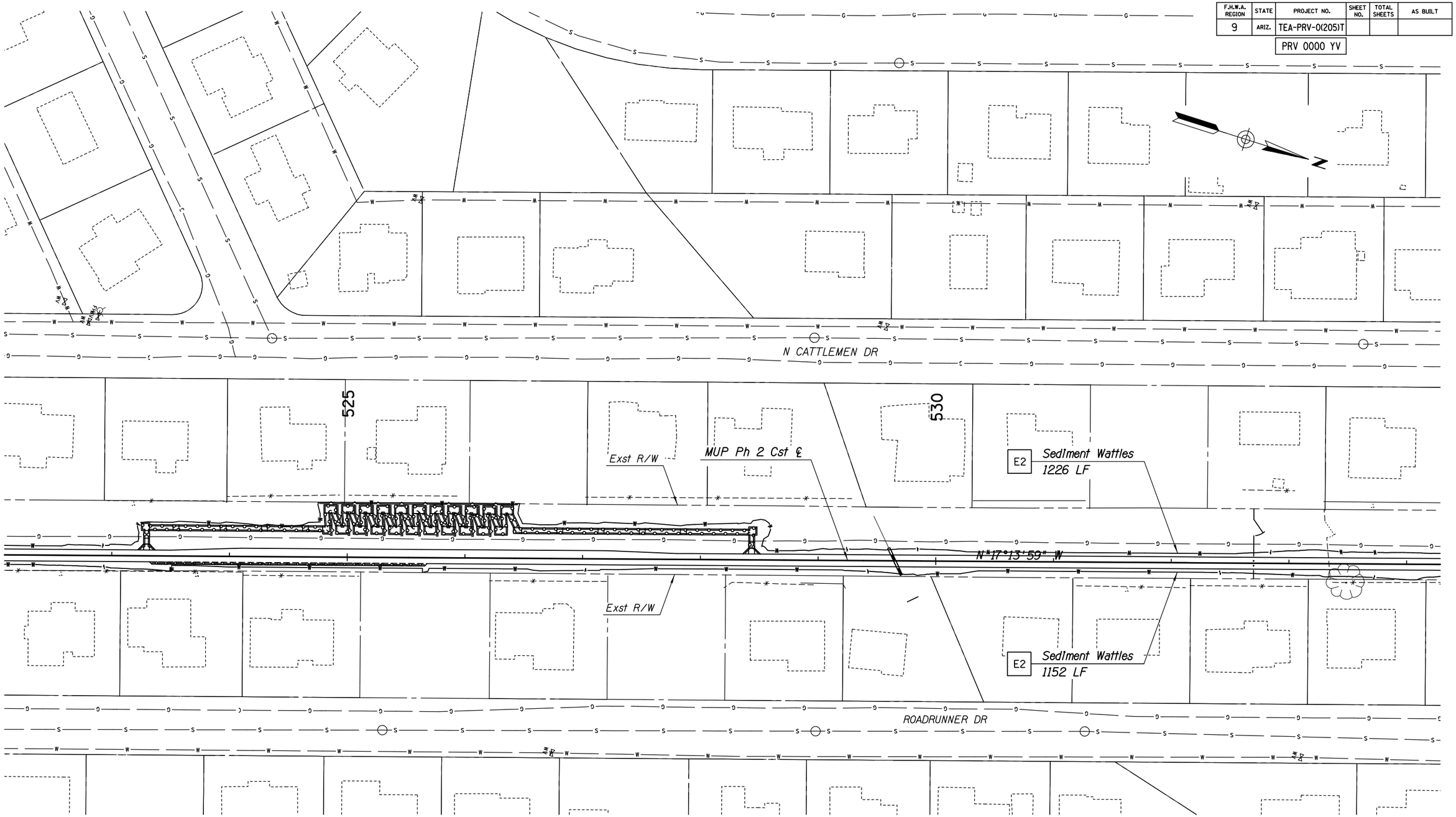

LEGEND:

Sediment Wattle

	NAME	DATE
DESIGN	SMG	06/14
DRAWN	CPG	06/14
CHECKED	GPF	06/14

PARSONS BRINCKERHOFF

ARIZONA DEPARTMENT OF TRANSPORTATION
INTERMODAL TRANSPORTATION DIVISION
ROADWAY DESIGN SECTION

EROSION CONTROL PLAN
Sta 522+20 to Sta 533+60

ROUTE | LOCATION: PRESCOTT VALLEY PIPELINE & CENTRAL CORE MULTI-USE PATHS (PIPELINE PHASE 2)

Registered Professional Engineer (Civil) CERTIFICATE NO. 49430 GREGORY PATRICK FLY ARIZONA U.S.A.
Expires 3/31/2015

DWG NO. E2-2.03

TRACS NO. SL680 01C | TEA-PRV-0(205)T | ___ OF ___

DATE- LOCATION- REVISIONS- FINISHED PLANS- SURVEY NO.

9/12/2014 T:\Prescott_MUP\SL641_ph2\SWPPP\SL641-ec03.dgn

F.H.W.A. REGION	STATE	PROJECT NO.	SHEET NO.	TOTAL SHEETS	AS BUILT
9	ARIZ.	TEA-PRV-0(205)T			
		PRV 0000 YV			

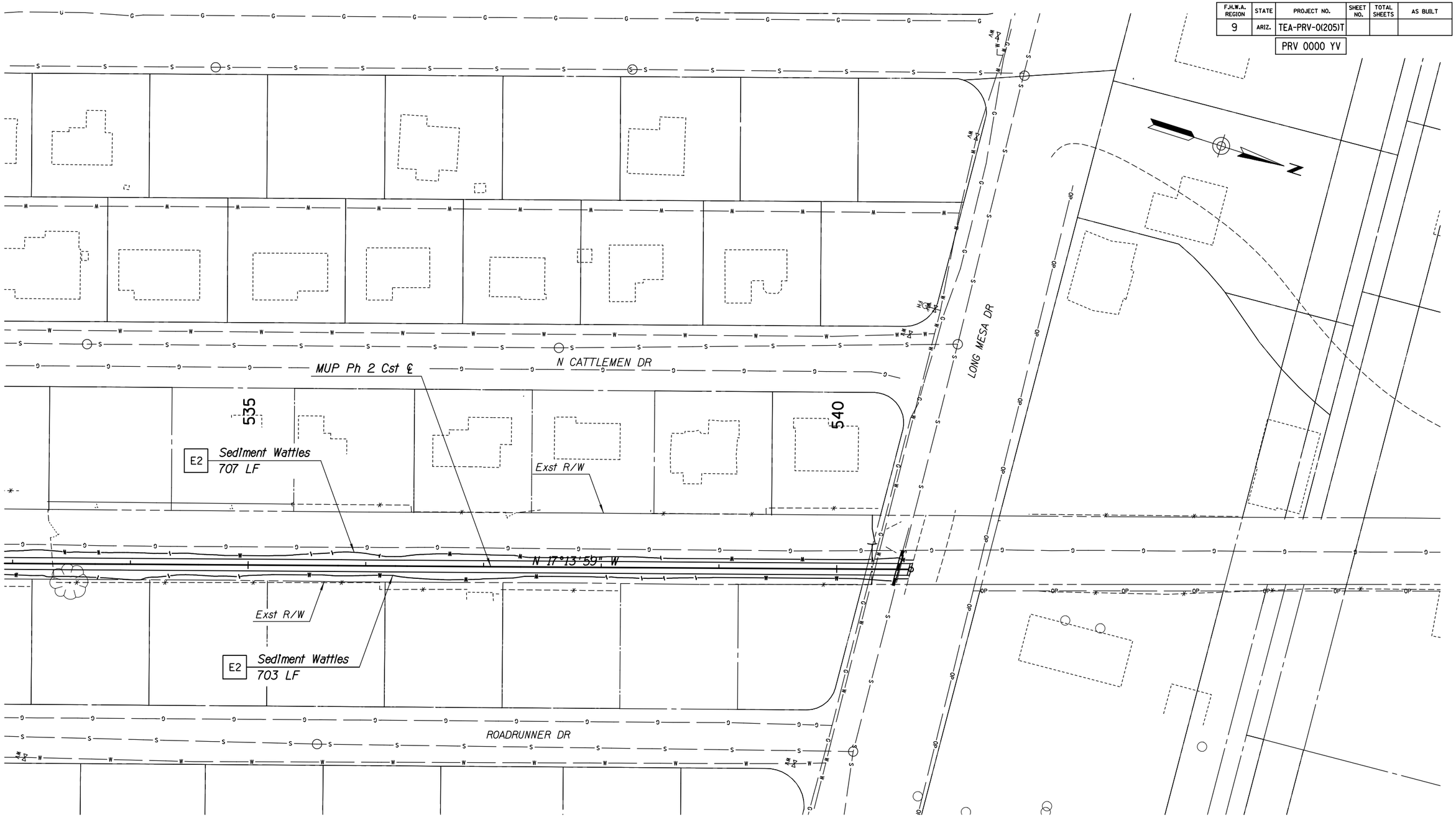

LEGEND:

Sediment Wattle

	NAME	DATE
DESIGN	SMG	06/14
DRAWN	CPG	06/14
CHECKED	GPF	06/14

PARSONS BRINCKERHOFF

ARIZONA DEPARTMENT OF TRANSPORTATION
INTERMODAL TRANSPORTATION DIVISION
ROADWAY DESIGN SECTION

EROSION CONTROL PLAN
Sta 533+60 to Sta 540+63.17

ROUTE | LOCATION PRESCOTT VALLEY PIPELINE & CENTRAL CORE MULTI-USE PATHS (PIPELINE PHASE 2)

Registered Professional Engineer (Civil) CERTIFICATE NO. 49430 GREGORY PATRICK FLY Date Signed ARIZONA U.S.A. Expires 3/31/2015

DWG NO. E2-2.04

TRACS NO. SL680 01C | TEA-PRV-0(205)T | ___ OF ___

9/12/2014 T:\Prescott_MUP\SL641_ph2\SWPPP\SL641-ec04.dgn

F.H.W.A. REGION	STATE	PROJECT NO.	SHEET NO.	TOTAL SHEETS	AS BUILT
9	ARIZ.	PRV-0(205)A			

PRV 0000 YV

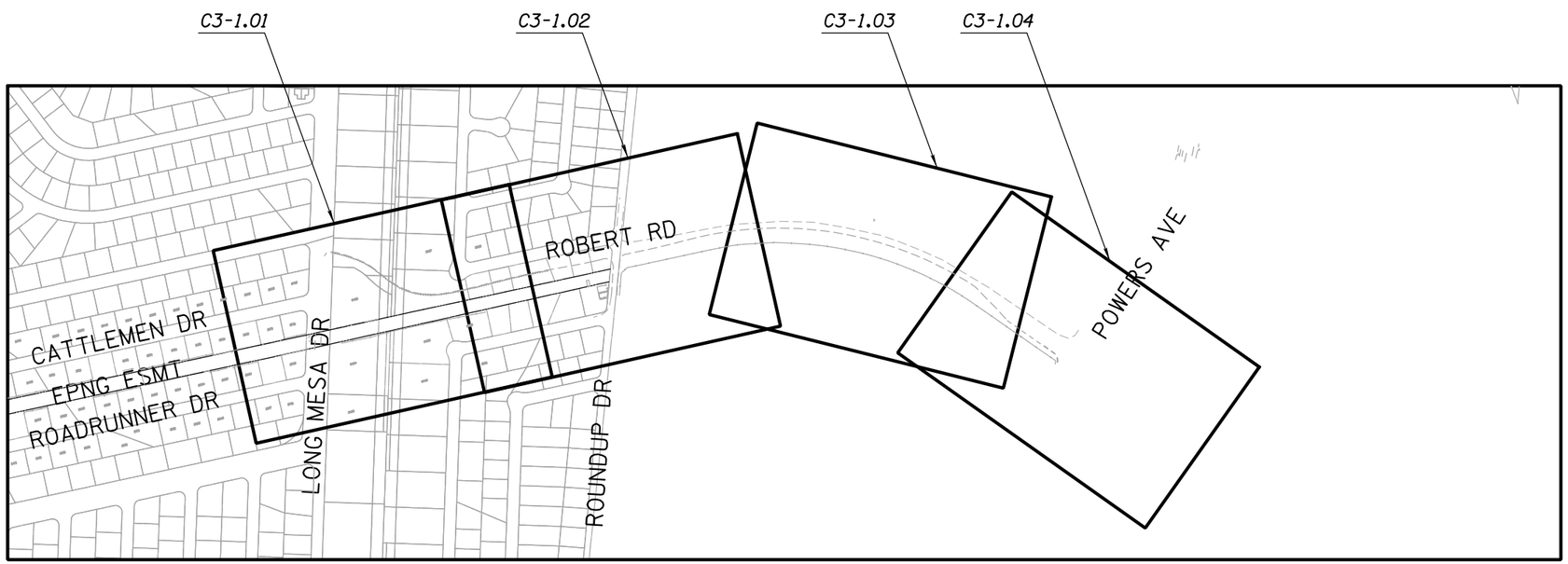

PIPELINE PHASE 3

Legend:

- (XXX) *Geometric Control Point*
- (XXX) *Geometric Curve Reference*
- X *Pipe Symbol*
- MH/X *Manhole Symbol*
- PE/X *Pipe Extension Symbol*
- X *Barrier Symbol*
- EX *Erosion Control Reference*

	NAME	DATE
DESIGN	SMG	05/14
DRAWN	CPG	05/14
CHECKED	GPF	05/14

PARSONS BRINCKERHOFF

ARIZONA DEPARTMENT OF TRANSPORTATION
INTERMODAL TRANSPORTATION DIVISION
ROADWAY DESIGN SECTION

KEYMAP

ROUTE | LOCATION PRESCOTT VALLEY PIPELINE & CENTRAL CORE MULTI-USE PATHS (PIPELINE PHASE 3)

Registered Professional Engineer (Civil) CERTIFICATE NO. 49430 GREGORY PATRICK FLY ARIZONA U.S.A. Expires 3/31/2015

DWG NO. G3-1.01

TRACS NO. SL680 01D | PRV-0(205)A | ___ OF ___

SURVEY NO. | FINISHED PLANS- | REVISIONS- | LOCATION- | DATE-

F.H.W.A. REGION	STATE	PROJECT NO.	SHEET NO.	TOTAL SHEETS	AS BUILT
9	ARIZ.	TEA-PRV-0(205)A			

PRV 0000 YV

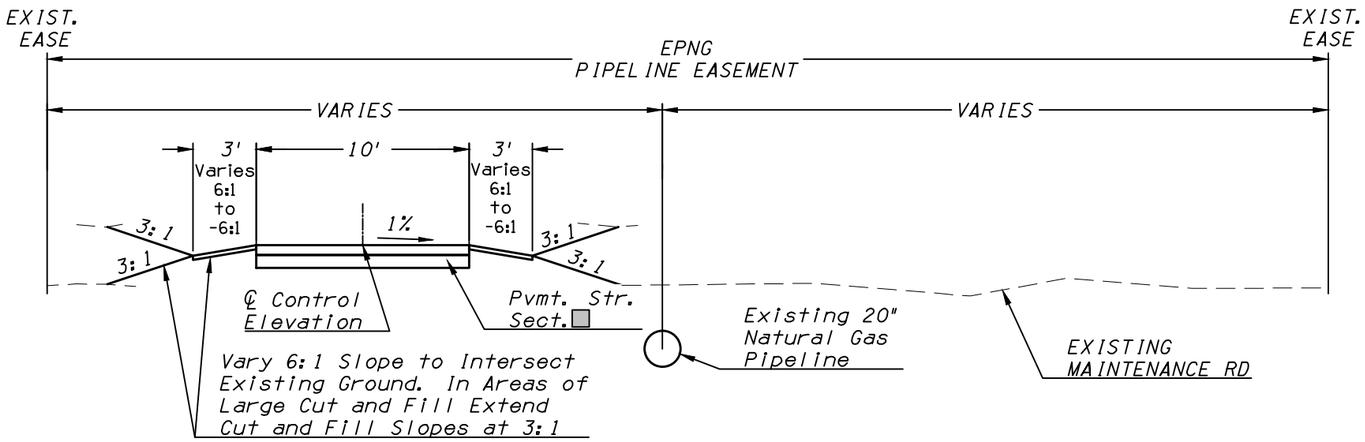

MULTI USE PATH PHASE III TYPICAL SECTION
STA. 400+00 TO 412+69

Pavement Structural Sections			
Roadway ℄	Beg Sta	End Sta	Pvmt Str Sct No.
MUP Ph 3 Seg 1	400+00.00	405+00.00	1
MUP Ph 3 Seg 1	405+00.00	412+68.90	2
MUP Ph 3 Seg 2	413+00.50	432+16.59	2

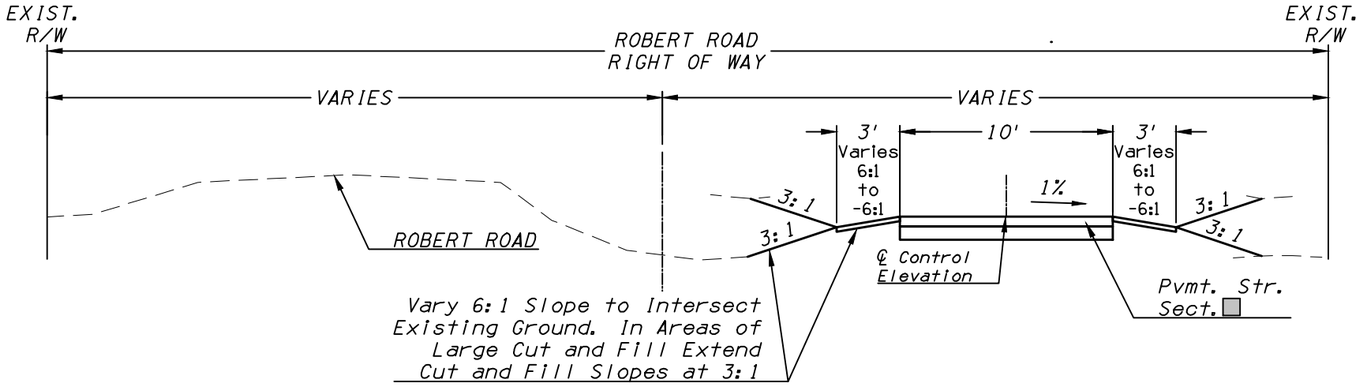

MULTI USE PATH PHASE III TYPICAL SECTION
STA. 412+69 TO 432+16.59

NOTES:

1. See DWG NO. G3-2.02 FOR SLOPE CONDITIONS.

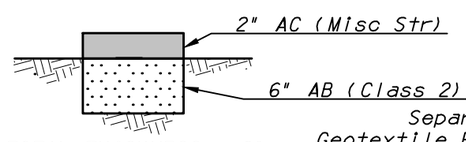

TOTAL THICKNESS = 8"
PAVEMENT STRUCTURAL SECTION NO. 1
MULTI-USE PATH

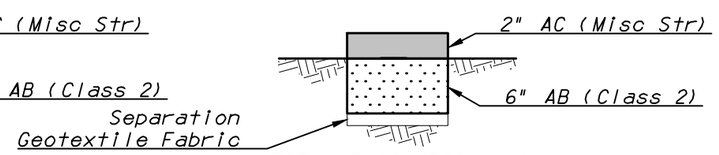

TOTAL THICKNESS = 8"
PAVEMENT STRUCTURAL SECTION NO. 2
MULTI-USE PATH

	NAME	DATE
DESIGN		
DRAWN		
CHECKED		

SWI 221 N. Marina St., Ste 102 Prescott, AZ 86301 928.541.0143 928.541.0175 fax www.swiaz.com

ARIZONA DEPARTMENT OF TRANSPORTATION
INTERMODAL TRANSPORTATION DIVISION
ROADWAY DESIGN SECTION

TYPICAL SECTIONS

LOCATION PRESCOTT VALLEY PIPELINE & CENTRAL CORE MULTI-USE PATHS (PIPELINE PHASE 3)

Registered Professional Engineer (Civil) CERTIFICATE NO. 20578 RICHARD E. ALDRIDGE Date Signed 9/12/14 ARIZONA, U.S.A. EXPIRES 3-31-15

DWG NO. G3-2.01

TRACS NO. SL680 01C | TEA-PRV-0(205)A | ___ OF ___

SURVEY NO. | FINISHED PLANS- | REVISIONS- | LOCATION- | DATE-

F.H.W.A. REGION	STATE	PROJECT NO.	SHEET NO.	TOTAL SHEETS	AS BUILT
9	ARIZ.	TEA-PRV-0(205)A			

PRV 0000 YV

MUP Grading – Lt Edge			
Roadway ℄	Beg Sta	End Sta	End Condition
MUP Ph 3 Seg 1	400+00.00	400+38.65	3' Grading
MUP Ph 3 Seg 1	400+38.65	412+40.79	Fill
MUP Ph 3 Seg 1	412+40.79	412+67.93	3' Grading
MUP Ph 3 Seg 2	413+03.00	413+64.72	3' Grading
MUP Ph 3 Seg 2	413+64.72	414+62.12	Fill
MUP Ph 3 Seg 2	414+62.12	415+42.71	3' Grading
MUP Ph 3 Seg 2	415+42.71	422+37.41	Fill
MUP Ph 3 Seg 2	422+37.41	426+59.78	3' Grading
MUP Ph 3 Seg 2	426+59.78	426+86.45	Fill
MUP Ph 3 Seg 2	426+86.45	427+45.25	3' Grading
MUP Ph 3 Seg 2	427+45.25	428+46.53	Fill
MUP Ph 3 Seg 2	428+46.53	428+53.20	3' Grading
MUP Ph 3 Seg 2	428+53.20	432+16.59	Fill

MUP Grading – Rt Edge			
Roadway ℄	Beg Sta	End Sta	End Condition
MUP Ph 3 Seg 1	400+00.00	400+36.50	3' Grading
MUP Ph 3 Seg 1	400+36.50	401+25.00	Fill
MUP Ph 3 Seg 1	401+25.00	401+53.47	Cut
MUP Ph 3 Seg 1	401+53.47	402+19.98	3' Grading
MUP Ph 3 Seg 1	402+19.98	402+87.41	Fill
MUP Ph 3 Seg 1	402+87.41	403+02.55	3' Grading
MUP Ph 3 Seg 1	403+02.55	404+90.70	Fill
MUP Ph 3 Seg 1	404+90.70	406+71.41	3' Grading
MUP Ph 3 Seg 1	406+71.41	412+29.01	Fill
MUP Ph 3 Seg 1	412+29.01	412+69.30	3' Grading
MUP Ph 3 Seg 2	412+98.48	413+69.46	3' Grading
MUP Ph 3 Seg 2	413+69.46	422+31.38	Fill*
MUP Ph 3 Seg 2	422+31.38	423+75.43	3' Grading
MUP Ph 3 Seg 2	423+75.43	426+92.95	Fill
MUP Ph 3 Seg 2	426+92.95	427+14.86	3' Grading
MUP Ph 3 Seg 2	427+14.86	427+80.57	Fill*
MUP Ph 3 Seg 2	427+80.57	428+12.52	3' Grading*
MUP Ph 3 Seg 2	428+12.52	428+29.83	Fill*
MUP Ph 3 Seg 2	428+29.83	431+41.98	3' Grading
MUP Ph 3 Seg 2	431+41.98	431+58.48	Fill
MUP Ph 3 Seg 2	431+58.48	432+16.59	3' Grading

*See Note 2

NOTES:

1. See Typical Sections on DWG NO. G3–2.01.

2. See Note on DWG NO. C3–1.02 and C3–1.03 for modified Rt. Edge grading locations.

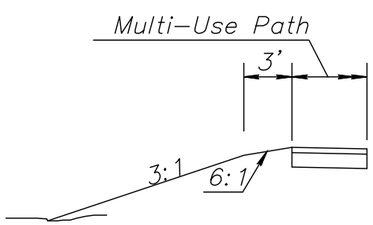

FILL CONDITION

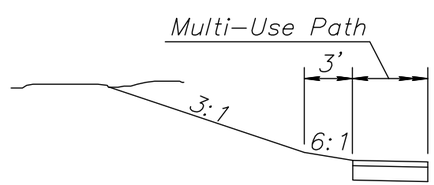

CUT CONDITION

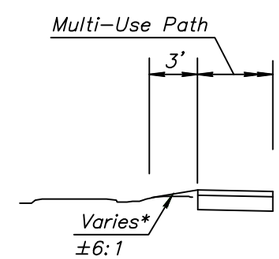

3' GRADING CONDITION

* Grade to Existing Ground for 3' from the Edge of Pavement (6:1 Max)

	NAME	DATE	ARIZONA DEPARTMENT OF TRANSPORTATION INTERMODAL TRANSPORTATION DIVISION ROADWAY DESIGN SECTION
DESIGN			
DRAWN			
CHECKED			
SVI	221 N. Marina St., Ste 102 Prescott, Az 86301 928.541.0443 928.541.0175 fax www.svivez.com		TYPICAL SECTION
	LOCATION PRESCOTT VALLEY PIPELINE & CENTRAL CORE MULTI-USE PATHS (PIPELINE PHASE 3)		
TRACS NO. SL680 01C		TEA-PRV-0(205)A	

Registered Professional Engineer (Civil) CERTIFICATE NO. 20578 RICHARD E. ALDRIDGE 9/12/14 Date Signed ..... ARIZONA, U.S.A. EXPIRES 3-31-15

DWG NO. G3 – 2.02

____ OF ____

SURVEY NO. | FINISHED PLANS– | REVISIONS– | LOCATION– | DATE–

F.H.W.A. REGION	STATE	PROJECT NO.	SHEET NO.	TOTAL SHEETS	AS BUILT
9	ARIZ.	TEA-PRV-0(205)A			

PRV 0000 YV

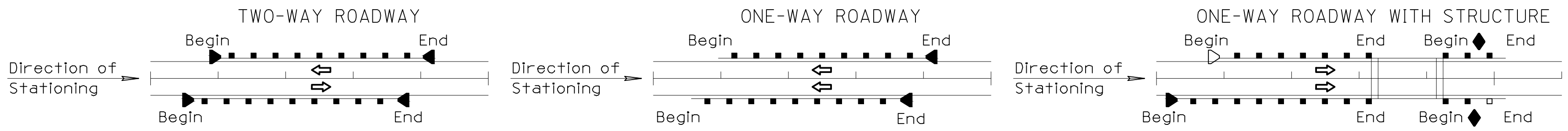

LOCATION		◇ BARRIER																										
		NEW GUARDRAIL								EXISTING GR						CONCRETE BARRIER											CABLE	
Beginning Station (Approximate) (0)	Plan Reference Number ◇	Type "A" C-10.01, Type "B" C-10.02	C-10.03 (Timber)	C-10.04 (Steel)	Detail	Length (Linear Feet) (0.0)	C-10.06 Nested W-Beam Length (Linear Feet) (0.0) ▲	C-10.07 Bolted Anchor (Each)	Shop Curved Guardrail Length (Linear Feet) (0.0)	Reconstruct-Exst Post, Block	Reconstruct-New Post, Block	Remove Rub Rail	Construct from Salvage	Remove	Length (Linear Feet) (0.0)	Remove Existing Length (Linear Feet) (0.0)	C-10.40 (32" Median)	C-10.41 (42" Median)	C-10.50 (32" Half)	C-10.51 (32" Half w/ Sidewalk)	C-10.52 (32" Half w/ Gutter) △	C-10.53 (42" Half w/ Gutter) △	C-10.54 (32" Half at Piers)	C-10.55 (42" Half at Piers)	Bridge Barrier ◐	Detail	High-Tension Cable Barrier Length (Linear Feet) (0) ●	C-12.30 Chain-Link Cable Length (Linear Feet) (0.0)
MUP Ph 3 Seg 2 Sta: 417+00	1	A	X			276.5																						
Sheet Total						276.5																						

	TRANSITION										END TREATMENT												
	RAIL Each			CONCRETE BARRIER Each							Action					Each ◪							
Begin = Treatment at Beginning End = Treatment at End	C-10.30 Thrie Beam	Bridge Thrie Beam ◐	Reconstruct Rub Rail	C-10.70 32" or C-10.72 42"	C-10.71 32" or C-10.73 42" △	C-10.74 42" to 32"	C-10.75 32" to C&G ◆	C-10.76 32" on Radius	Bridge Barrier ◐	Detail	New	Reconstruct (See Special Prv)	Remove and Salvage	Construct from Salvage	Remove	Tangent ET Plus or SKT-350 ◧	Flared SRT-350 or FLEAT-350 ◧	End Anchor C-10.08 or Detail	High-Tension Cable Terminal	Sand Barrels C-1 or Detail ■	Attenuator Detail	BCT (L=12.5')	REMARKS
Begin											X					1							
End											X					1							
Begin																							
End																							
Begin																							
End																							
Begin																							
End																							
Begin																							
End																							
Begin																							
End																							
Begin																							
End																							
Begin																							
End																							
Begin																							
End																							
Begin																							
End																							
Begin																							
End																							
Begin																							
End																							
Begin																							
End																							
Sheet Total																2							

THE ZEROS IN PARENTHESES (0.0) INDICATE THE DIMENSIONAL PRECISION FOR THAT COLUMN

▲ THE LENGTH OF NESTED W-BEAM IS FOR TYPES 2 OR 3 (37.5'). DETERMINATION OF TYPE (1, 2 or 3) TO USE IS MADE IN THE FIELD. THE PAY QUANTITY IS THE ACTUAL LENGTH INSTALLED (25.0' or 37.5').

△ SPECIFY GUTTER WIDTH UNDER "REMARKS"

◆ BEGIN STATION AFTER BRIDGE TRANSITION

◐ SEE BRIDGE SHEETS FOR DETAILS AND QUANTITIES

● LENGTH IS FROM LENGTH OF NEED (LON) POINT TO LON POINT. ACTUAL SEGMENT LENGTH VARIES DEPENDING ON TERMINAL TYPE. SEE SPECIAL PROVISIONS.

◆ SPECIFY TYPE 1 OR 2 UNDER 'REMARKS'

◪ ALLOWABLE END TREATMENT OPTIONS ARE INDICATED WITH THE NUMBER '1' IN THE SPACE. BLANK SPACES ARE NOT VIABLE ALTERNATIVES.

■ ARRAY TYPE AND ANGLE IS NOTED UNDER 'REMARKS'

◧ NOTE: FOR AS-BUILT PREPARATION - CIRCLE END TREATMENT INSTALLED

	NAME	DATE
DESIGN		
DRAWN		
CHECKED		

SWI
221 N. Marina St., Ste 102
Prescott, Az 86301
928.541.0443
928.541.1075 fax
www.swiaz.com

ARIZONA DEPARTMENT OF TRANSPORTATION
INTERMODAL TRANSPORTATION DIVISION
ROADWAY DESIGN SECTION

BARRIER SUMMARY SHEET

Registered Professional Engineer (Civil)
CERTIFICATE NO. 20878
RICHARD E. ALDRIDGE
9/12/14
Date Signed
ARIZONA, USA
EXPIRES 3-31-17

LOCATION PRESCOTT VALLEY PIPELINE & CENTRAL CORE MULTI-USE PATHS (PIPELINE PHASE 3)

DWG NO. G3-3.01

TRACS NO. SL680 01C | TEA-PRV-0(205)A | ____ OF ____

Sep 12, 2014-1:28pm

P:\2012\12050 prescott valley pipeline multi-use path\Drawings\Construction Plans\BS01.dwg SWI-C3D-12

SURVEY NO. | FINISHED PLANS- | REVISIONS- | LOCATION- | DATE- | SURVEY NO. | FINISHED PLANS- | REVISIONS- | LOCATION- | DATE-

F.H.W.A. REGION	STATE	PROJECT NO.	SHEET NO.	TOTAL SHEETS	AS BUILT
9	ARIZ.	TEA-PRV-0(205)A			
		PRV 0000 YV			

CSP - CORRUGATED STEEL PIPE

DESCRIPTION													CSP								END TREATMENT													QUANTITIES					
				In. / Ft. / Degree					Each	Ft.			Ft.				In.				Each				Catch Basin, Manhole, Headwall & Junction Structure									Cubic Yard					
										Remove Existing Pipe			Extend								End Section C-13.25					Ft.			Grate Ft.									
Station	Plan Reference Number	◐ Controlling Fill Height Range	Size	Length In Place (0.0)	Skew (0)	Remove & Salvage End Section	Remove Headwall	Left (0.0)	Right (0.0)	Left (0)	Right (0)	Corrugation	Wall Thickness (0.000)	Zinc	Aluminum	Bituminous	Reset Salvaged End Section	New	Detail ------	Size, (In.) Manhole	Standard or Detail ------	S-Single / D-Double	Location	H (0.0)	L Wing (0.0)	L 18" Slotted Drain (0)	L 24" Slotted Drain (0)	Type	Elevation (0.00)	Depth In.	Depth Ft.	L (0.0)	Inlet Depression C-15.70	Pipe Excavation (0)	Pipe Backfill (0) C-13.15	Drainage Excavation (0)	Berm Embankment (0)	Dike Embankment (0)	REMARKS
Sta 409+97.99	1	2	4-48"	42.0						41.0	14.0	A	0.79	X	X						SD 6.30												123	51				CONSTRUCT MULTI-PIPE HEADWALL SD 6.30
Sta 417+57.24	2	2	5-35"X24"	44.0						5.0	17.0	A	0.79	X	X																		62	33				MITER OUTLET END TO MATCH FILL SLOPE
Sta 417+77.10	3	2	5-35"X24"	43.0						2.5	15.5	A	0.79	X	X																		51	27				MITER OUTLET END TO MATCH FILL SLOPE
Sta 417+96.75	4	2	5-35"X24"	43.0						1.5	18.5	A	0.79	X	X																		57	30				MITER OUTLET END TO MATCH FILL SLOPE
Sta 418+16.13	5	2	5-35"X24"	43.0						3.0	15.0	A	0.79	X	X																		51	27				MITER OUTLET END TO MATCH FILL SLOPE
Sta 418+35.41	6	2	5-35"X24"	43.0						3.0	15.0	A	0.79	X	X																		51	27				MITER OUTLET END TO MATCH FILL SLOPE
Sta 418+54.73	7	2	5-35"X24"	43.0						3.0	15.0	A	0.79	X	X																		51	27				MITER OUTLET END TO MATCH FILL SLOPE
Sta 418+74.11	8	2	5-35"X24"	43.0						3.0	17.0	A	0.79	X	X																		57	30				MITER OUTLET END TO MATCH FILL SLOPE
Sta 418+93.49	9	2	5-35"X24"	43.0						3.0	15.0	A	0.79	X	X																		51	27				MITER OUTLET END TO MATCH FILL SLOPE
Sta 419+12.57	10	2	5-35"X24"	43.0						2.5	15.5	A	0.79	X	X																		51	27				MITER OUTLET END TO MATCH FILL SLOPE
Sta 419+32.14	11	2	5-35"X24"	43.0						2.0	16.0	A	0.79	X	X																		51	27				MITER OUTLET END TO MATCH FILL SLOPE
Sta 419+51.51	12	2	5-35"X24"	43.0						1.0	17.0	A	0.79	X	X																		51	27				MITER OUTLET END TO MATCH FILL SLOPE
Sta 419+71.20	13	2	4-35"X24"	43.0						2.0	16.0	A	0.79	X	X																		41	21				MITER OUTLET END TO MATCH FILL SLOPE
Sta 419+86.17	14	2	35"X24"	43.0						3.0	17.0	A	0.79	X	X																		11	4				MITER OUTLET END TO MATCH FILL SLOPE
Sheet Total																																	759	385				

FILL HEIGHT RANGE TABLE (Ft.)													
RANGE NO.		1	2	3	4	5	6	7	8	9	10	11	12
FILL	>	1	3	5	8	11	15	20	25	30	40	55	70
HEIGHT (Ft.)	≤	3	5	8	11	15	20	25	30	40	55	70	90

◒ SHOULD FIELD CONDITIONS VARY FROM THE RANGE INDICATED, CONTACT DESIGN FOR RE-EVALUATION OF PIPE DESIGN REQUIREMENTS.

◪ PIPE CORRUGATION			
A	2⅔x½	D	6x2
B	3x1	E	3x1 or 9x2½
C	9x2½		

NOTE:
FOR PIPE CULVERT PLACEMENT SEE STANDARD DRAWINGS C-13.10 AND C-13.15

NOTE:
THE ZEROS IN PARENTHESES (0, 0.0 & 0.000) INDICATE THE DIMENSIONAL PRECISION FOR THAT COLUMN

	NAME	DATE
DESIGN	EWS	12/13
DRAWN	EWS	12/13
CHECKED	REA	12/13

SWI
221 N. Marina St., Ste 102
Prescott, Az 86301
928.541.0443
928.541.0175 fax
www.swiaz.com

ARIZONA DEPARTMENT OF TRANSPORTATION
INTERMODAL TRANSPORTATION DIVISION
ROADWAY DESIGN SECTION

NEW CORRUGATED STEEL PIPE EXTENSIONS SUMMARY SHEET

LOCATION PRESCOTT VALLEY PIPELINE & CENTRAL CORE MULTI-USE PATHS (PIPELINE PHASE 3)

Registered Professional Engineer (Civil) CERTIFICATE NO. 20578 RICHARD E. ALDRIDGE Date Signed 9/12/14 ARIZONA, U.S.A. EXPIRES 3-31-15

DWG NO. G3-3.02

TRACS NO. SL680 01C | TEA-PRV-0(205)A | ___ OF ___

REV. DATE: 05/03/2010

SURVEY NO. | FINISHED PLANS- | REVISIONS- | LOCATION- | DATE-

Sep 12, 2014-1:28pm

P:\2012\12050 prescott valley pipeline multi-use path\Drawings\Construction Plans\DT04.dwg SWI-C3D-12

NOTE:
THE ZEROS IN PARENTHESES (0, 0.0 & 0.000) INDICATE THE DIMENSIONAL PRECISION FOR THAT COLUMN

NOTE:
FOR PIPE CULVERT PLACEMENT SEE STANDARD DRAWINGS C-13.10 AND C-13.15

NOTE:
PIPE OPTIONS SELECTED ARE THOSE REQUIRED TO MEET MINIMUM SERVICE LIFE.
ALLOWABLE PIPE OPTIONS ARE INDICATED WITH THE LETTER 'X' IN THE SPACE. BLANK SPACES ARE NOT ALLOWABLE ALTERNATES.

CSP – CORRUGATED STEEL PIPE
CAP – CORRUGATED ALUMINUM PIPE
RCP – REINFORCED CONCRETE PIPE
NRCP – NON-REINFORCED CONCRETE PIPE
NRCIPCP – NON-REINFORCED CAST-IN-PLACE CONCRETE PIPE
CHDPEPP – CORRUGATED HIGH-DENSITY POLYETHYLENE PLASTIC PIPE

F.H.W.A. REGION	STATE	PROJECT NO.	SHEET NO.	TOTAL SHEETS	AS BUILT
9	ARIZ.	TEA-PRV-0(205)A			
		PRV 0000 YV			

DESCRIPTION																											END TREATMENT																								QUANTITIES	
					In.	In.	Ft.	Degree		In.	Coating									In.							Each	Catch Basin, Manhole, Headwall & Junction Structure																						Cubic Yard	
Station	Plan Reference Number	⊖ Controlling Fill Height Range	Size, Corrugated	Size, Smooth	Length (0)	Skew (0)	⊠ Corrugation	Wall Thickness (0.000)	Zinc	Bituminous Coated Zinc	Aluminum	Bituminous Coated Aluminum	⊠ Corrugation	Wall Thickness (0.000)	Uncoated	Bituminous Coated	Class – Non-Trench	Class – Trench	Class	Minimum Wall Thickness (0)	AASHTO M-294 Type C	AASHTO M-294 Type S	C-13.20 & C-13.25	Detail	Size, (In) Manhole	Standard or Detail	End Section	Ea	S-Single / D-Double	Location	H (0.0)	L Wing (0.0)	L 18" Slotted Drain (0)	L 24" Slotted Drain (0)	Type	Elevation (0.00)	Grate	Ft.	Depth	In.	Ft.	L (0.0)	Inlet Depression C-15.70	Pipe Excavation (0)	Pipe Backfill (0) C-13.15	Drainage Excavation (0)	Berm/Dike Embankment (0)	REMARKS
Sta 416+52.08	1	1	18"		30.0															X																								9	4				MITER EACH END TO MATCH SLOPE
Sta 421+11.80	2	1	18"		30.0															X																								9	4				MITER EACH END TO MATCH SLOPE
Sheet Total																																												18	8				

FILL HEIGHT RANGE TABLE (Ft.)													
RANGE NO.		1	2	3	4	5	6	7	8	9	10	11	12
FILL	>	1	3	5	8	11	15	20	25	30	40	55	70
HEIGHT (Ft.)	≤	3	5	8	11	15	20	25	30	40	55	70	90
⊖ SHOULD FIELD CONDITIONS VARY FROM THE RANGE INDICATED, CONTACT DESIGN FOR RE-EVALUATION OF PIPE DESIGN REQUIREMENTS.													

⊠ PIPE CORRUGATION			
A	2⅔x1/2	D	6x2
B	3x1	E	3x1 or 9x21/2
C	9x21/2		

	NAME	DATE
DESIGN		
DRAWN		
CHECKED		

SVI
221 N. Marina St., Ste 102
Prescott, AZ 86301
928.541.0443
928.541.0775 fax
www.svivez.com

ARIZONA DEPARTMENT OF TRANSPORTATION
INTERMODAL TRANSPORTATION DIVISION
ROADWAY DESIGN SECTION

NEW PIPE SUMMARY SHEET

Registered Professional Engineer (Civil)
CERTIFICATE NO. 20878
RICHARD E. ALDRIDGE
Date Signed 9/12/14
ARIZONA, U.S.A.
EXPIRES 3-31-15

LOCATION PRESCOTT VALLEY PIPELINE & CENTRAL CORE MULTI-USE PATHS (PIPELINE PHASE 3)

DWG NO. G3-4.01

TRACS NO. SL680 01C

TEA-PRV-0(205)A

___ OF ___

DATE- LOCATION- REVISIONS- FINISHED PLANS- SURVEY NO.

Sep 12, 2014-1:28pm

P:\2012\12050 prescott valley pipeline multi-use path\Drawings\Construction Plans\NPSS.dwg SWI-C3D-12

F.H.W.A. REGION	STATE	PROJECT NO.	SHEET NO.	TOTAL SHEETS	AS BUILT
9	ARIZ.	TEA-PRV-0(205)A			

PRV 0000 YV

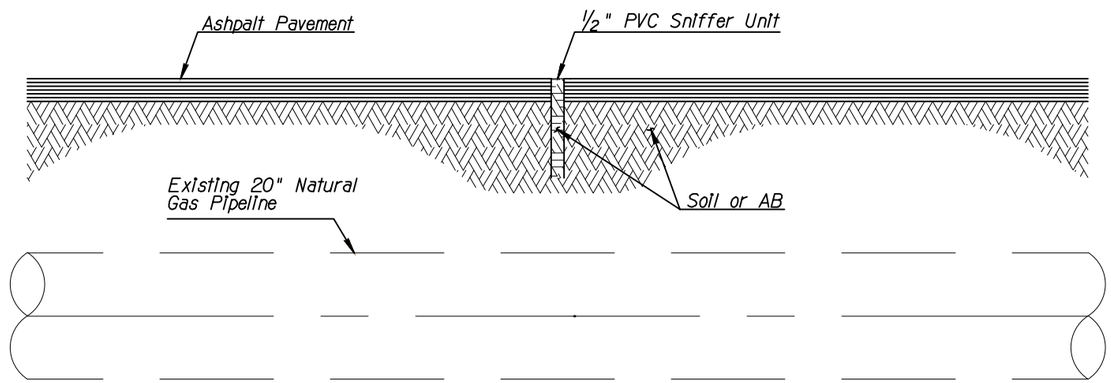

EPNG SNIFFER UNIT
ELEVATION VIEW
NOT TO SCALE

Note:

The PVC Units will be Open-Ended with the Tops Even or Flush with the Top of the Asphalt Pavement and will Extend Vertically through the Ashpalt Pavement to the Soil or Sub Base Material.

DETAIL L

EPNG SNIFFER UNITS

	NAME	DATE
DESIGN		
DRAWN		
CHECKED		

SVMI
221 N. Marina St., Ste 102
Prescott, Az 86301
928.541.0443
928.541.0115 Fax
www.svmiaz.com

ARIZONA DEPARTMENT OF TRANSPORTATION
INTERMODAL TRANSPORTATION DIVISION
ROADWAY DESIGN SECTION

DETAIL SHEET
DETAIL L

Registered Professional Engineer (Civil) CERTIFICATE NO. 20878 RICHARD E. ALDRIDGE Date Signed 9/12/14 ARIZONA, U.S.A.

LOCATION PRESCOTT VALLEY PIPELINE & CENTRAL CORE MULTI-USE PATHS (PIPELINE PHASE 3)

DWG NO. G3-5.01

TRACS NO. SL680 01C | TEA-PRV-0(205)A | ____ OF ____

F.H.W.A. REGION	STATE	PROJECT NO.	SHEET NO.	TOTAL SHEETS	AS BUILT
9	ARIZ.	TEA-PRV-0(205)A			
		PRV 0000 YV			

● FOR ELEVATIONS ABOVE 4,000', USE THE VALUES IN PARENTHESES

GENERAL NOTES

1. This detail is for roadway layout only.
2. The SKT-350 shall be installed in accordance with the manufacturer's specifications and current approved drawings including all details, hardware, hardware quantities, and other information.

   The current manufacturer's approved drawing is number SKT-W-2US-AZ, 06/04/11. Visit the Roadway Design web site to view and print the drawing.
3. The 50' W-Beam length shall consist of four 12'-6" sections, the end section being a proprietary split rail.
4. See specifications and Traffic Signing and Marking Standard Drawings.
5. ③ "Leaveouts" in asphaltic concrete shall be provided in the AC pavement around the guardrail posts at the locations and dimensions specified on the manufacturer approved drawings. "Leaveout" material shall consist of a 1-sack grout mix or other non-cohesive material as approved by the engineer.

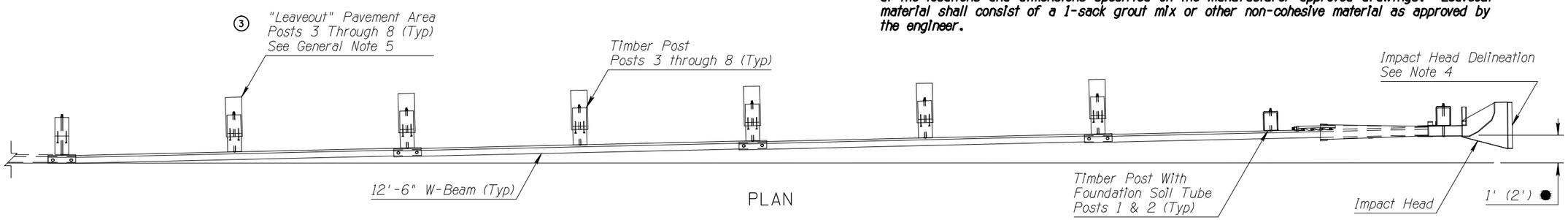

PLAN

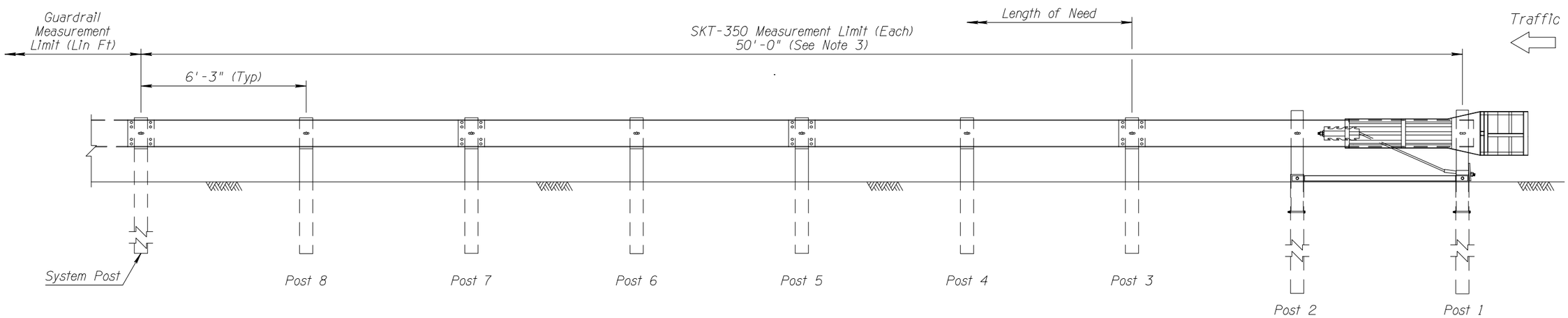

ELEVATION

DETAIL M

Sheet 1 of 2

2_FOUNDATION_SOIL_TUBES ①
(AC_PAVEMENT)

DESIGN APPROVED: J.C. Cooper	ARIZONA DEPARTMENT OF TRANSPORTATION INTERMODAL TRANSPORTATION DIVISION ROADWAY GROUP PLANS DETAIL
APPROVED FOR DISTRIBUTION: Mary Viparina	DETAIL SHEET DETAIL M
ROUTE / LOCATION: PRESCOTT VALLEY PIPELINE & CENTRAL CORE MULTI-USE PATHS	SHEET 1 OF 2
TRACS NO. SL680 01C	TEA-PRV-0(205)A ___ OF ___

Note to Designer:
The information presented in this Roadway Plans Detail is for general use. Designers should satisfy themselves that their project site conditions are appropriate for use of this drawing. Contents within the inner border shall not be altered, except for the addition of the Detail designation.

Date: 6/06/11

NO	DESCRIPTION OF REVISIONS	MADE BY	DATE
1	REISSUED DRAWING WITH MODIFIED APPROACH TAPER	BLF.	5/22/07
2	REVISED TITLE BLOCK NAME & DRAWING DATE	BLF.	7/09/09
3	ADDED "LEAVEOUT" CALLOUT & NEW GENERAL NOTE 5	BLF.	6/06/11
4	----------	----	----

● FOR ELEVATIONS ABOVE 4,000 FT, USE THE VALUES IN PARENTHESES

▲ *Top of Rail = 28"*
See General Note 1
Std Dwg C-10.03

F.H.W.A. REGION	STATE	PROJECT NO.	SHEET NO.	TOTAL SHEETS	AS BUILT
9	ARIZ.	TEA-PRV-0(205)A			
		PRV 0000 YV			

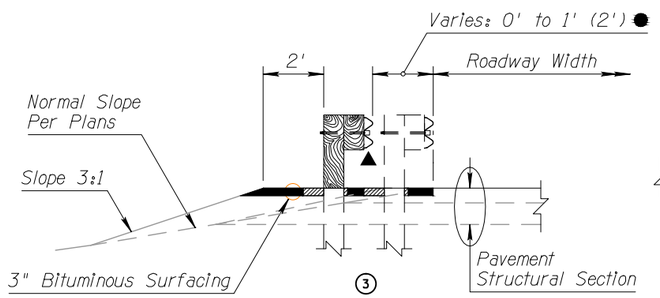

TYPE A SECTION

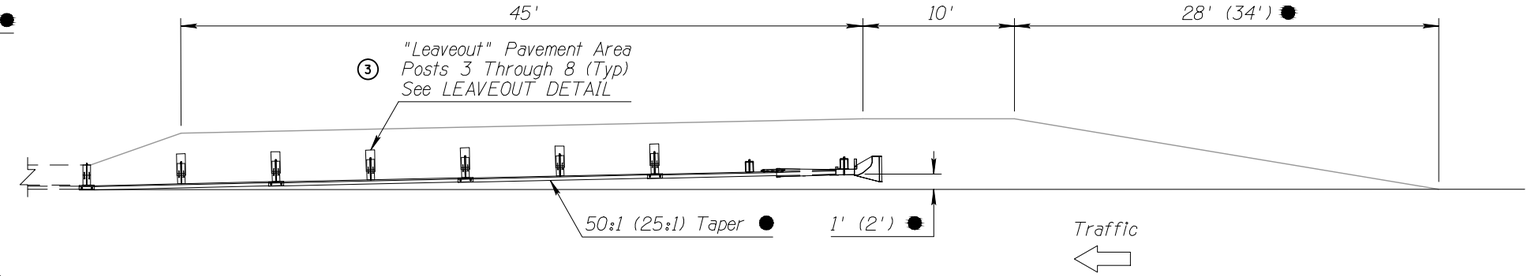

TYPE A GUARDRAIL INSTALLATION
(FACE OF RAIL AT EDGE OF PAVEMENT)

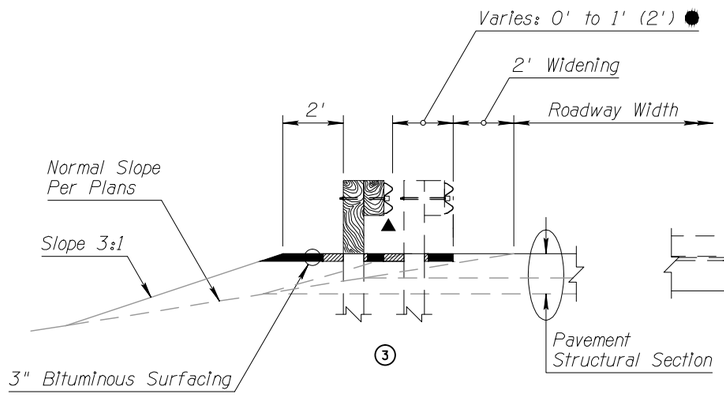

TYPE B SECTION

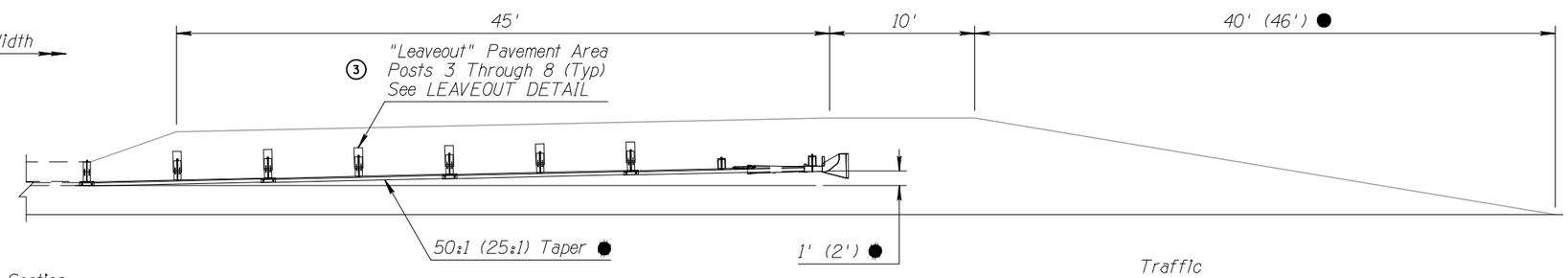

TYPE B GUARDRAIL INSTALLATION
(FACE OF RAIL OFFSET 2' FROM NORMAL EDGE OF PAVEMENT)

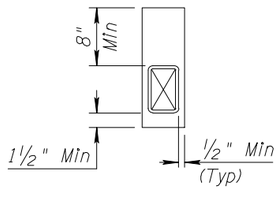

LEAVEOUT DETAIL
④

DETAIL M

Sheet 2 of 2

2 FOUNDATION SOIL TUBES
(AC PAVEMENT)

Note to Designer:
The information presented in this Roadway Plans Detail is for general use. Designers should satisfy themselves that their project site conditions are appropriate for use of this drawing. Contents within the inner border shall not be altered, except for the addition of the Detail designation.

Date: 6/06/11

NO	DESCRIPTION OF REVISIONS	MADE BY	DATE
1	REISSUED DRAWING WITH MODIFIED APPROACH TAPER	BLE.	5/22/07
2	REVISED APPROACH TAPER CRITERIA	BLE.	7/03/09
3	ADDED "LEAVEOUT" CALLOUT & REVISED SECTION VIEWS	BLE.	6/06/11
4	ADDED "LEAVEOUT" DETAIL	BLE.	6/06/11

DESIGN APPROVED: J.C. Cooper	ARIZONA DEPARTMENT OF TRANSPORTATION INTERMODAL TRANSPORTATION DIVISION **ROADWAY GROUP PLANS DETAIL**
APPROVED FOR DISTRIBUTION: Mary Viparina	DETAIL SHEET DETAIL M
ROUTE / LOCATION: PRESCOTT VALLEY PIPELINE & CENTRAL CORE MULTI-USE PATHS	SHEET 2 OF 2
TRACS NO. SL680 01C	TEA-PRV-0(205)A ___ OF ___

Sep 12, 2014-1:28pm

FILE: P:\2012\12050 prescott valley pipeline multi-use path\Drawings\Construction Plans\DTM2.dwg SWI-C3D-12

● FOR ELEVATIONS ABOVE 4,000', USE THE VALUES IN PARENTHESES

F.H.W.A. REGION	STATE	PROJECT NO.	SHEET NO.	TOTAL SHEETS	AS BUILT
9	ARIZ.	TEA-PRV-0(205)A			
		PRV 0000 YV			

GENERAL NOTES

1. This detail is for roadway layout only.
2. The ET-PLUS shall be installed in accordance with the manufacturer's specifications and current approved drawings including all details, hardware, hardware quantities, and other information.

   The current manufacturer's approved drawing is number SS-358, 05/16/11. Visit the Roadway Design web site to view and print the drawing.
3. ③ "Leaveouts" in asphaltic concrete shall be provided in the AC pavement around the guardrail posts at the locations and dimensions specified on the manufacturer approved drawings. "Leaveout" material shall consist of a 1-sack grout mix or other non-cohesive material as approved by the engineer.
4. See specifications and Traffic Signing and Marking Standard Drawings.

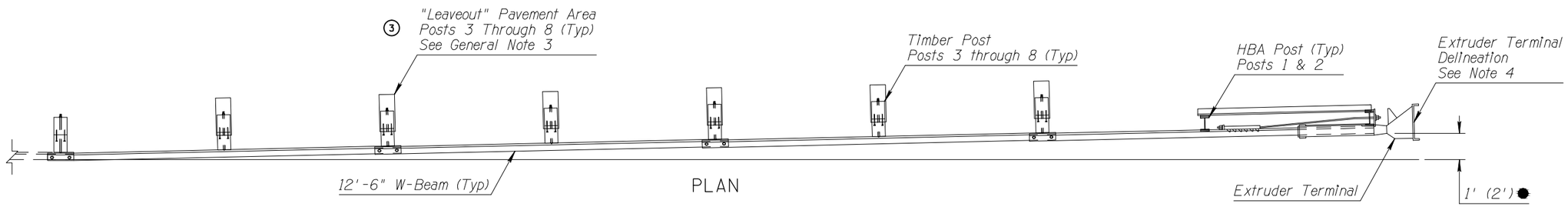

PLAN

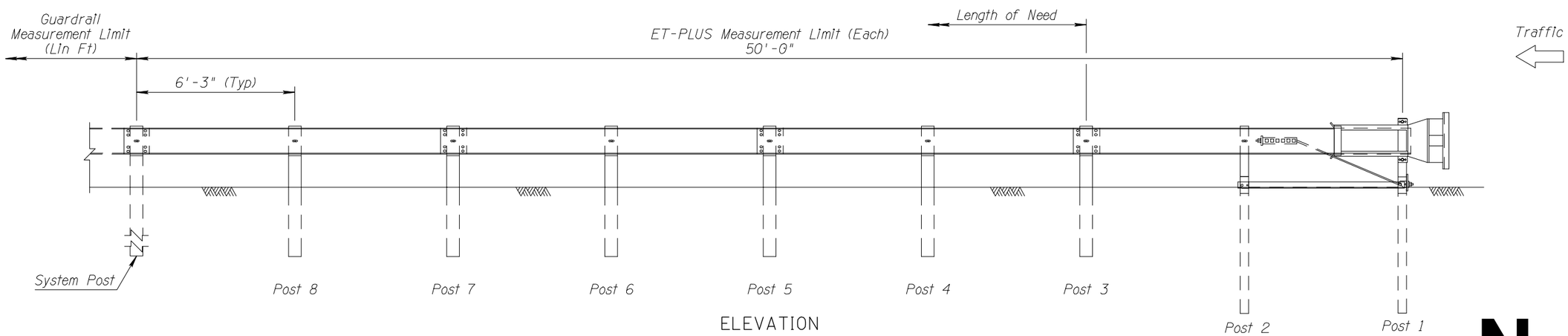

ELEVATION

DETAIL N

Sheet 1 of 2

HBA__POSTS
(AC_PAVEMENT) ①

Note to Designer:
The information presented in this Roadway Plans Detail is for general use. Designers should satisfy themselves that their project site conditions are appropriate for use of this drawing. Contents within the inner border shall not be altered, except for the addition of the Detail designation.

Date: 6/06/11

NO	DESCRIPTION OF REVISIONS	MADE BY	DATE
1	REISSUED DRAWING WITH MODIFIED APPROACH TAPER	BLF.	5/22/07
2	REVISED TITLE BLOCK NAME & DRAWING DATE	BLF.	7/09/09
3	ADDED "LEAVEOUT" CALLOUT & NEW GENERAL NOTE 3	BLF.	6/06/11
4	----------	----	----

DESIGN APPROVED: J.C. Cooper	ARIZONA DEPARTMENT OF TRANSPORTATION INTERMODAL TRANSPORTATION DIVISION ROADWAY GROUP PLANS DETAIL
APPROVED FOR DISTRIBUTION: Mary Viparina	DETAIL SHEET DETAIL N
ROUTE / LOCATION: PRESCOTT VALLEY PIPELINE & CENTRAL CORE MULTI-USE PATHS	SHEET 1 OF 2
TRACS NO. SL680 01C	TEA-PRV-0(205)A ___ OF ___

● FOR ELEVATIONS ABOVE 4,000 FT, USE THE VALUES IN PARENTHESES

▲ *Top of Rail = 28"*
See General Note 1
Std Dwg C-10.03

F.H.W.A. REGION	STATE	PROJECT NO.	SHEET NO.	TOTAL SHEETS	AS BUILT
9	ARIZ.	TEA-PRV-0(205)A			
		PRV 0000 YV			

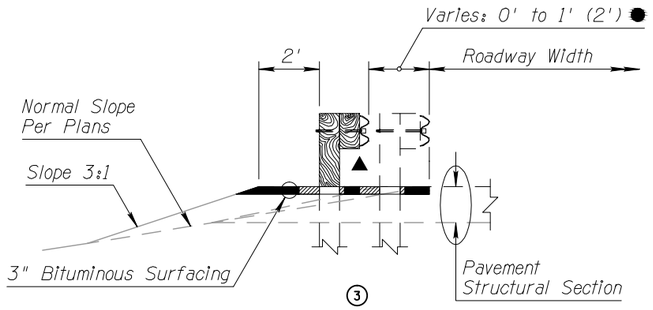

TYPE A SECTION

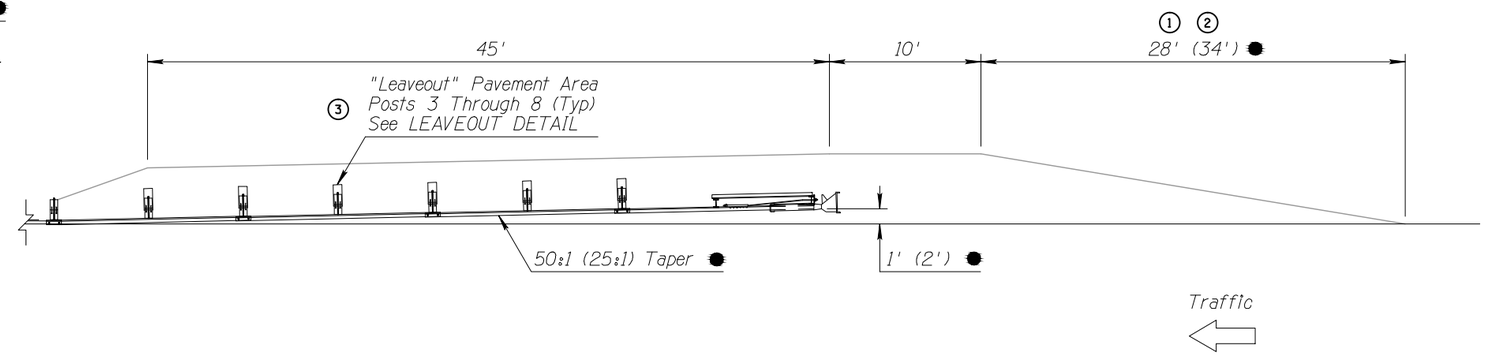

TYPE A GUARDRAIL INSTALLATION
(FACE OF RAIL AT EDGE OF PAVEMENT)

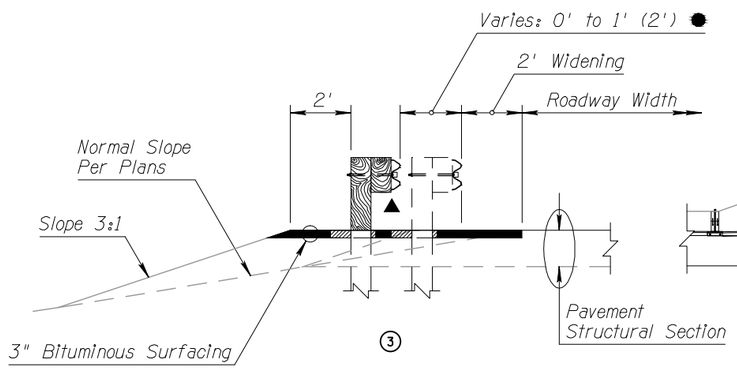

TYPE B SECTION

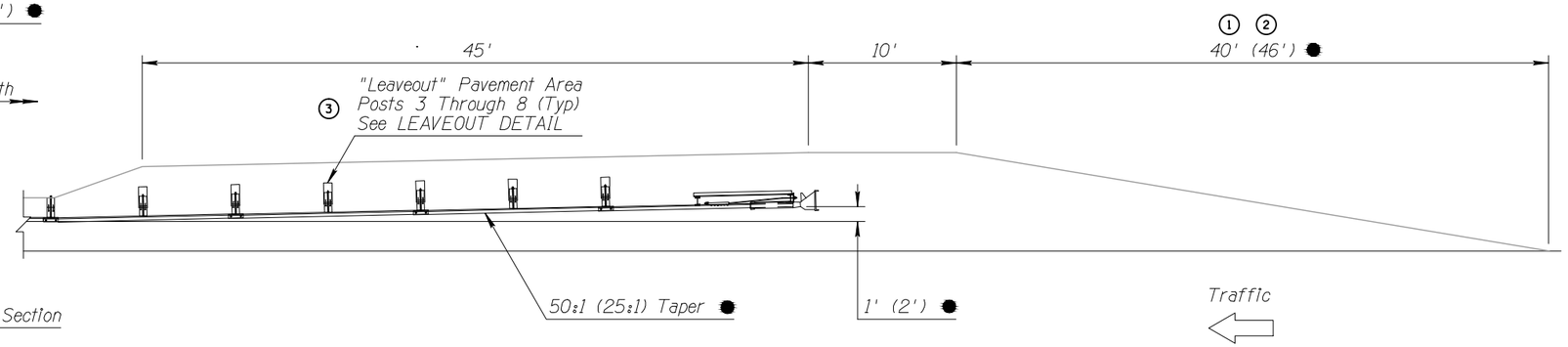

TYPE B GUARDRAIL INSTALLATION
(FACE OF RAIL OFFSET 2' FROM NORMAL EDGE OF PAVEMENT)

DETAIL N

Sheet 2 of 2

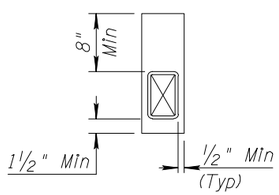

LEAVEOUT DETAIL
④

HBA POSTS
(AC PAVEMENT)

Note to Designer:
The Information presented in this Roadway Plans Detail is for general use. Designers should satisfy themselves that their project site conditions are appropriate for use of this drawing. Contents within the Inner border shall not be altered, except for the addition of the Detail designation.

Date: 05/16/11

NO	DESCRIPTION OF REVISIONS	MADE BY	DATE
1	REISSUED DRAWING WITH MODIFIED APPROACH TAPER	BLE.	5/22/07
2	REVISED APPROACH TAPER CRITERIA	BLE.	3/03/09
3	ADDED "LEAVEOUT" CALLOUT & REVISED SECTION VIEWS	BLE.	5/16/11.
4	ADDED "LEAVEOUT" DETAIL	BLE.	5/16/11

DESIGN APPROVED: J.C. Cooper	ARIZONA DEPARTMENT OF TRANSPORTATION INTERMODAL TRANSPORTATION DIVISION **ROADWAY GROUP PLANS DETAIL**
APPROVED FOR DISTRIBUTION: Mary Viparina	DETAIL SHEET DETAIL N
ROUTE / LOCATION: PRESCOTT VALLEY PIPELINE & CENTRAL CORE MULTI-USE PATHS	SHEET 2 OF 2
TRACS NO. SL680 01C	TEA-PRV-0(205)A ___ OF ___

PLOTTED: Sep 12, 2014-1:28pm

FILE: P:\2012\12050 prescott valley pipeline multi-use path\Drawings\Construction Plans\DTN2.dwg SWI-C3D-12

F.H.W.A. REGION	STATE	PROJECT NO.	SHEET NO.	TOTAL SHEETS	AS BUILT
9	ARIZ.	TEA-PRV-0(205)A			

PRV 0000 YV

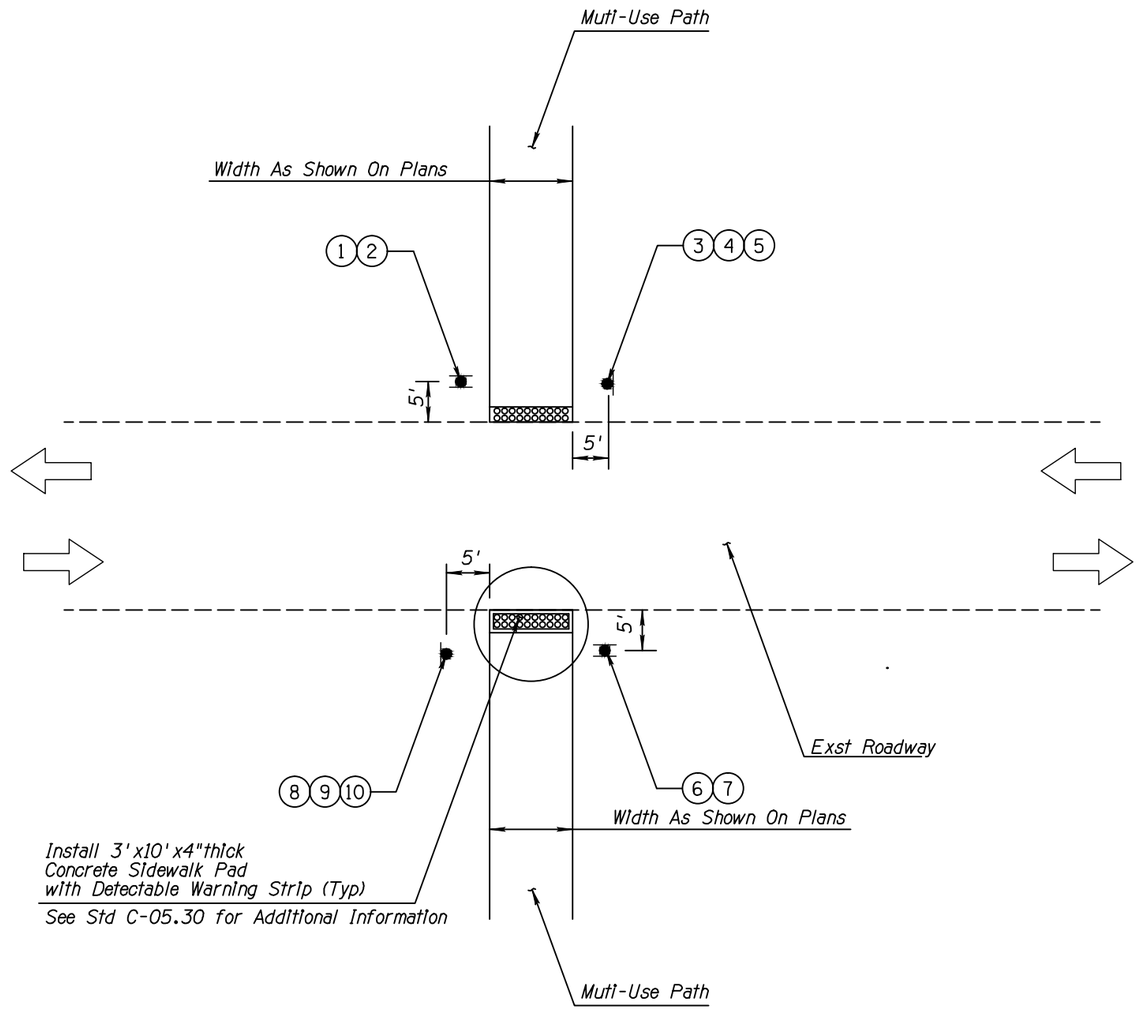

TYPICAL PATH CROSSING
PLAN VIEW
N.T.S.

NOTES:

1. See the Sign Summary Sheet for Additional Information.
2. The Configuration Shown Represents a Typical Application Where the Path Crosses an Existing Street, Utilizing MUTCD Figure 9B-7. Field Modifications Permitted as Approved by the Engineer.
3. See Plan Sheets for Locations

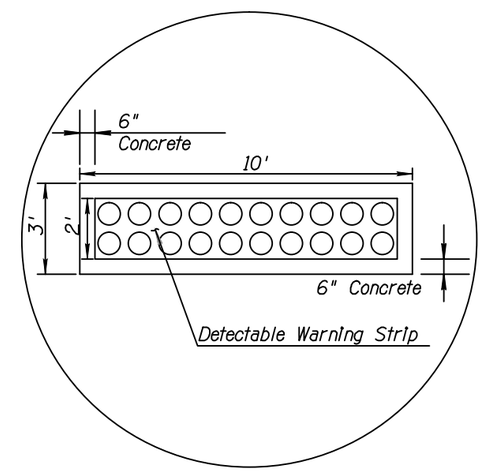

LEGEND:

(X) - Sign Number (See Sign Summary Sheet)

— — - Existing Pavement

——— - New Path

DETAIL P

TYPICAL PATH CROSSING AT STREETS

	NAME	DATE
DESIGN		
DRAWN		
CHECKED		

SVI 221 N. Marina St., Ste 102 Prescott, AZ 86301 928.541.0445 928.541.0175 Fax www.svivz.com

ARIZONA DEPARTMENT OF TRANSPORTATION
INTERMODAL TRANSPORTATION DIVISION
ROADWAY DESIGN SECTION

DETAIL SHEET
DETAIL P

LOCATION PRESCOTT VALLEY PIPELINE & CENTRAL CORE MULTI-USE PATHS (PIPELINE PHASE 3)

Registered Professional Engineer (Civil) CERTIFICATE NO. 20578 RICHARD E. ALDRIDGE Date Signed 9/12/14 ARIZONA, U.S.A.
EXPIRES 3-31-17

DWG NO. G3-5.02

TRACS NO. SL680 01C | TEA-PRV-0(205)A | ____ OF ____

SURVEY NO. | FINISHED PLANS- | REVISIONS- | LOCATION- | DATE-

Sep 12, 2014-1:28pm P:\2012\12050 prescott valley pipeline multi-use path\Drawings\Construction Plans\DTD.dwg SWI-C3D-12

F.H.W.A. REGION	STATE	PROJECT NO.	SHEET NO.	TOTAL SHEETS	AS BUILT
9	ARIZ.	TEA-PRV-0(205)A			

PRV 0000 YV

All Coordinates Are Ground Coordinates And All Bearings Are Grid Bearings

G.A.F. = 1.00032

PLAN REF NO.	LOCATION	P.I./P.O.T. STATION	COORDINATES											
100	MUP Ph 3 Seg 1 Cst ℄ POB	400+00.00	N=1319253.28	E=579634.76										
101	MUP Ph 3 Seg 1 Cst ℄ PC	400+07.29	N=13119260.57	E=579634.68										
102	MUP Ph 3 Seg 1 Cst ℄ PI	400+19.17	N=1319273.28	E=579634.54	SIMPLE	Δ=50°25'16"	R=27.00'	T=12.71'	L=23.76'	Ext=2.84'	e=NC			
103	MUP Ph 3 Seg 1 Cst ℄ PT	400+31.05	N=1319281.27	E=579624.65										
104	MUP Ph 3 Seg 1 Cst ℄ PC	400+61.32	N=1319300.30	E=579601.11										
105	MUP Ph 3 Seg 1 Cst ℄ PI	400+69.30	N=1319305.47	E=579594.72	SIMPLE	Δ=33°51'11"	R=27.00'	T=8.22'	L=15.95'	Ext=1.22'	e=NC			
106	MUP Ph 3 Seg 1 Cst ℄ PT	400+77.28	N=1319313.32	E=579592.29										
107	MUP Ph 3 Seg 1 Cst ℄ PC	409+02.10	N=1320101.30	E=579348.52										
108	MUP Ph 3 Seg 1 Cst ℄ PI	409+21.38	N=1320120.20	E=579342.68	SIMPLE	Δ=31°33'43"	R=70.00'	T=19.78'	L=38.56'	Ext=2.74'	e=NC			
109	MUP Ph 3 Seg 1 Cst ℄ PT	409+40.66	N=1320133.24	E=579327.80										
110	MUP Ph 3 Seg 1 Cst ℄ PC	409+46.23	N=1320136.91	E=579323.61										
111	MUP Ph 3 Seg 1 Cst ℄ PI	409+65.68	N=1320150.08	E=579308.60	SIMPLE	Δ=31°50'31"	R=70.00'	T=19.97'	L=38.90'	Ext=2.79'	e=NC			
112	MUP Ph 3 Seg 1 Cst ℄ PT	409+85.14	N=1320169.18	E=579302.79										
113	MUP Ph 3 Seg 1 Cst ℄ PC	412+13.92	N=1320388.08	E=579292.29										
114	MUP Ph 3 Seg 1 Cst ℄ PI	412+22.66	N=1320396.74	E=579233.61	SIMPLE	Δ=37°04'30"	R=27.00'	T=9.05'	L=17.47'	Ext=1.48'	e=NC			
115	MUP Ph 3 Seg 1 Cst ℄ PT	412+31.40	N=1320402.07	E=579226.29										
116	MUP Ph 3 Seg 1 Cst ℄ PC	412+41.75	N=1320408.15	E=579217.91										
117	MUP Ph 3 Seg 1 Cst ℄ PI	412+49.72	N=1320412.98	E=579211.27	SIMPLE	Δ=33°49'20"	R=27.00'	T=8.21'	L=15.94'	Ext=1.22'	e=NC			
118	MUP Ph 3 Seg 1 Cst ℄ PT	412+57.68	N=1320420.68	E=579208.44										
119	MUP Ph 3 Seg 1 Cst ℄ POE	412+68.90	N=1320431.21	E=579204.58										
200	MUP Ph 3 Seg 2 Cst ℄ POB	413+00.50	N=1320460.87	E=579193.69										
201	MUP Ph 3 Seg 1 Cst ℄ PC	413+15.33	N=1320474.79	E=579188.58										
202	MUP Ph 3 Seg 1 Cst ℄ PI	413+25.78	N=1320485.13	E=579184.78	SIMPLE	Δ=44°21'45"	R=27.00'	T=11.01'	L=20.91'	Ext=2.16'	e=NC			
203	MUP Ph 3 Seg 1 Cst ℄ PT	413+36.23	N=1320495.17	E=579189.29										
204	MUP Ph 3 Seg 1 Cst ℄ PC	413+52.96	N=1320510.43	E=579196.15										
205	MUP Ph 3 Seg 1 Cst ℄ PI	413+62.85	N=1320519.88	E=579200.40	SIMPLE	Δ=41°58'39"	R=27.00'	T=10.36'	L=19.78'	Ext=1.92'	e=NC			
206	MUP Ph 3 Seg 1 Cst ℄ PT	413+72.74	N=1320529.74	E=579197.24										
207	MUP Ph 3 Seg 1 Cst ℄ PC	415+92.17	N=1320738.69	E=579130.24										
208	MUP Ph 3 Seg 1 Cst ℄ PI	415+98.14	N=1320744.38	E=579128.41	SIMPLE	Δ=3°25'19"	R=200.00'	T=5.97'	L=11.94'	Ext=0.09'	e=NC			
209	MUP Ph 3 Seg 1 Cst ℄ PT	416+04.12	N=1320750.17	E=579126.93										
210	MUP Ph 3 Seg 1 Cst ℄ PC	416+16.36	N=1320762.03	E=579123.90										
211	MUP Ph 3 Seg 1 Cst ℄ PI	416+51.60	N=1320796.81	E=579115.00	SIMPLE	Δ=26°55'07"	R=150.00'	T=35.90'	L=70.47'	Ext=4.24'	e=NC			
212	MUP Ph 3 Seg 1 Cst ℄ PT	416+86.84	N=1320823.79	E=579091.31										
213	MUP Ph 3 Seg 1 Cst ℄ PC	416+95.80	N=1320830.53	E=579085.40										
214	MUP Ph 3 Seg 1 Cst ℄ PI	417+51.26	N=1320873.31	E=579047.85	SIMPLE	Δ=31°46'34"	R=200.00'	T=56.93'	L=110.92'	Ext=7.94'	e=NC			
215	MUP Ph 3 Seg 1 Cst ℄ PT	418+06.72	N=1320929.46	E=579038.45										

CENTERLINE CONTROL POINT AND CURVE DATA TABLE

All bearings and angles have been rounded to the nearest second.
Use the control points provided and their respective state plane coordinates to re-establish the centerline of each path.

	NAME	DATE
DESIGN		
DRAWN		
CHECKED		

SVI
221 N. Marina St., Ste 102
Prescott, Az 86301
928.541.0443
928.541.0175 fax
www.svizc.com

ARIZONA DEPARTMENT OF TRANSPORTATION
INTERMODAL TRANSPORTATION DIVISION
ROADWAY DESIGN SECTION

GEOMETRIC SUMMARY SHEET

LOCATION PRESCOTT VALLEY PIPELINE & CENTRAL CORE MULTI-USE PATHS (PIPELINE PHASE 3)

Registered Professional Engineer (Civil) CERTIFICATE NO. 20578 RICHARD E. ALDRIDGE 9/12/14 Date Signed ARIZONA, U.S.A.
EXPIRES 3-31-?

DWG NO. C3-1.01

TRACS NO. SL680 01C

TEA-PRV-0(205)A

____ OF ____

Sep 12, 2014-1:28pm

P:\2012\12050 prescott valley pipeline multi-use path\Drawings\Construction Plans\GS01.dwg SWI-C3D-12

F.H.W.A. REGION	STATE	PROJECT NO.	SHEET NO.	TOTAL SHEETS	AS BUILT
9	ARIZ.	TEA-PRV-0(205)A			

PRV 0000 YV

All Coordinates Are Ground Coordinates And All Bearings Are Grid Bearings

G.A.F. = 1.00032

PLAN REF NO.	LOCATION	P.I./P.O.T. STATION	COORDINATES												
216	MUP Ph 3 Seg 2 Cst ℄ PC	419+42.50	N=1321063.37	E=579016.05											
217	MUP Ph 3 Seg 2 Cst ℄ PI	419+85.50	N=1321106.45	E=579008.84	SIMPLE	Δ=24°38'10"	R=200.00'	T=43.67'	L=86.00'	Ext=4.71'	e=NC				
218	MUP Ph 3 Seg 2 Cst ℄ PT	420+28.50	N=1321148.61	E=579020.24											
219	MUP Ph 3 Seg 2 Cst ℄ PC	421+09.14	N=1321226.45	E=579041.30											
220	MUP Ph 3 Seg 2 Cst ℄ PI	421+32.47	N=1321249.08	E=579047.42	SIMPLE	Δ=13°22'08"	R=200.00'	T=23.44'	L=46.67'	Ext=1.37'	e=NC				
221	MUP Ph 3 Seg 2 Cst ℄ PT	421+55.80	N=1321272.50	E=579048.15											
222	MUP Ph 3 Seg 2 Cst ℄ PC	422+20.20	N=1321336.87	E=579050.13											
223	MUP Ph 3 Seg 2 Cst ℄ PI	422+31.27	N=1321347.95	E=579050.48	SIMPLE	Δ=6°20'31"	R=200.00'	T=11.08'	L=22.14'	Ext=0.31'	e=NC				
224	MUP Ph 3 Seg 2 Cst ℄ PT	422+42.34	N=1321358.92	E=579052.04											
225	MUP Ph 3 Seg 2 Cst ℄ PC	424+07.02	N=1321521.95	E=579075.27											
226	MUP Ph 3 Seg 2 Cst ℄ PI	424+15.55	N=1321530.40	E=579076.48	SIMPLE	Δ=4°53'14"	R=200.00'	T=8.54'	L=17.06'	Ext=0.18'	e=NC				
227	MUP Ph 3 Seg 2 Cst ℄ PT	424+24.08	N=1321538.71	E=579078.40											
228	MUP Ph 3 Seg 2 Cst ℄ PC	425+49.70	N=1321661.12	E=579106.65											
229	MUP Ph 3 Seg 2 Cst ℄ PI	425+65.51	N=1321676.55	E=579110.22	SIMPLE	Δ=9°03'24"	R=200.00'	T=15.84'	L=31.61'	Ext=0.63'	e=NC				
230	MUP Ph 3 Seg 2 Cst ℄ PT	425+81.32	N=1321691.23	E=579116.16											
231	MUP Ph 3 Seg 2 Cst ℄ PC	427+01.31	N=1321802.44	E=579161.22											
232	MUP Ph 3 Seg 2 Cst ℄ PI	427+10.56	N=1321811.03	E=579164.70	SIMPLE	Δ=5°18'17"	R=200.00'	T=9.26'	L=18.52'	Ext=0.21'	e=NC				
233	MUP Ph 3 Seg 2 Cst ℄ PT	427+19.82	N=1321819.26	E=579168.96											
234	MUP Ph 3 Seg 2 Cst ℄ PC	429+71.70	N=1322042.96	E=579284.71											
235	MUP Ph 3 Seg 2 Cst ℄ PI	429+78.46	N=1322048.97	E=579287.82	SIMPLE	Δ=3°52'17"	R=200.00'	T=6.76'	L=13.51'	Ext=0.11'	e=NC				
236	MUP Ph 3 Seg 2 Cst ℄ PT	429+85.22	N=1322054.75	E=579291.32											
237	MUP Ph 3 Seg 2 Cst ℄ POE	432+16.59	N=1322252.56	E=579411.34											

CENTERLINE CONTROL POINT AND CURVE DATA TABLE

All bearings and angles have been rounded to the nearest second.
Use the control points provided and their respective state plane coordinates to re-establish the centerline of each path.

	NAME	DATE
DESIGN		
DRAWN		
CHECKED		

SWI
221 N. Marina St., Ste 102
Prescott, Az 86301
928.541.0443
928.541.0075 fax
www.swiaz.com

ARIZONA DEPARTMENT OF TRANSPORTATION
INTERMODAL TRANSPORTATION DIVISION
ROADWAY DESIGN SECTION

GEOMETRIC SUMMARY SHEET

LOCATION PRESCOTT VALLEY PIPELINE & CENTRAL CORE MULTI-USE PATHS (PIPELINE PHASE 3)

Registered Professional Engineer (Civil) CERTIFICATE NO. 20578 RICHARD E. ALDRIDGE 9/12/14 Date Signed ARIZONA, U.S.A. EXPIRES 3-31-15

DWG NO. C3-1.02

TRACS NO. SL680 01C | TEA-PRV-0(205)A | ___ OF ___

DATE- LOCATION- REVISIONS- FINISHED PLANS- SURVEY NO.

Sep 12, 2014-1:28pm

P:\2012\12050 prescott valley pipeline multi-use path\Drawings\Construction Plans\GS02.dwg SWI-C3D-12

F.H.W.A. REGION	STATE	PROJECT NO.	SHEET NO.	TOTAL SHEETS	AS BUILT
9	ARIZ.	TEA-PRV-0(205)A			
		PRV 0000 YV			

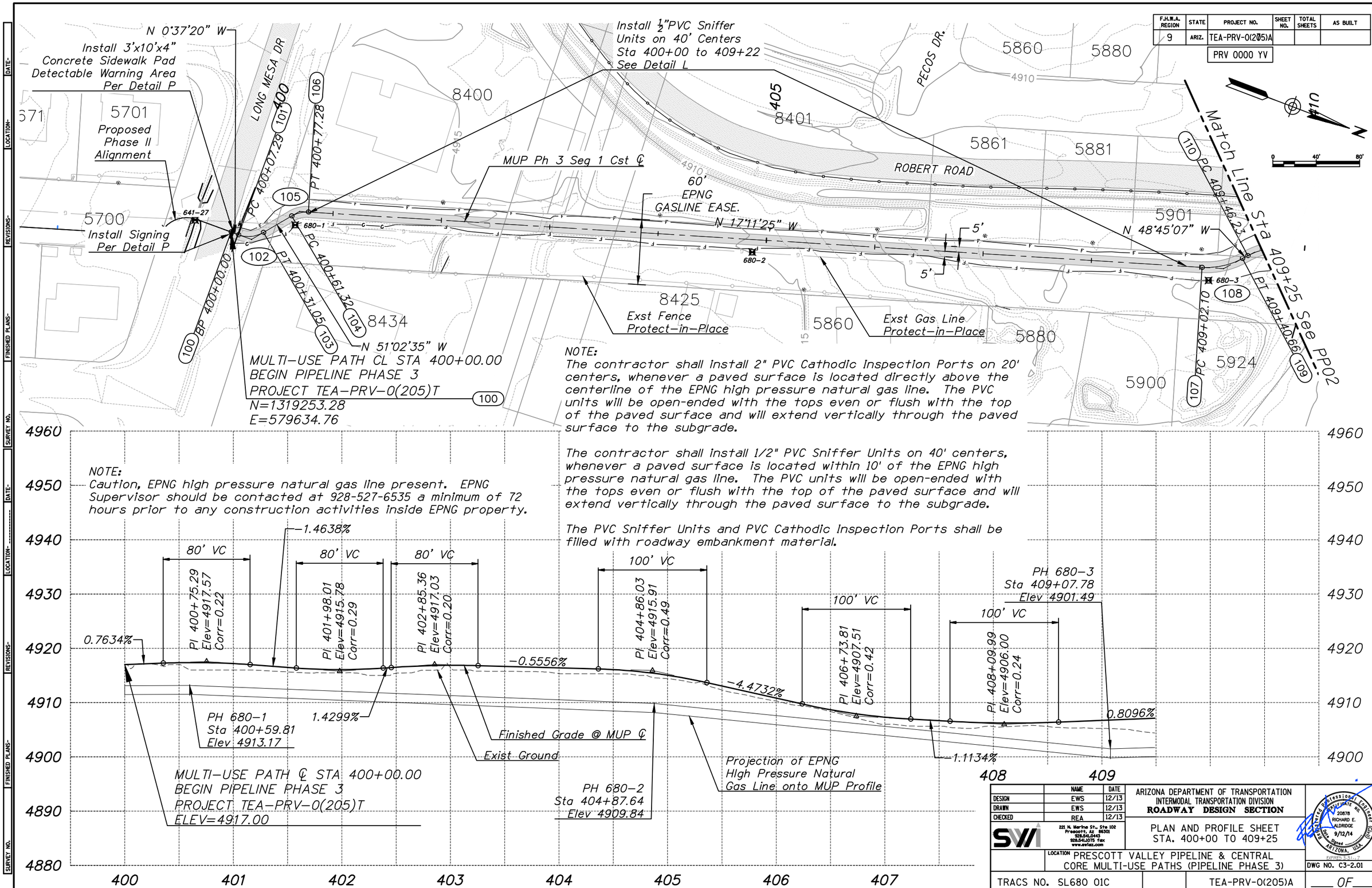

	NAME	DATE
DESIGN	EWS	12/13
DRAWN	EWS	12/13
CHECKED	REA	12/13

SVMI
221 N. Marina St., Ste 102
Prescott, AZ 86301
928.541.0443
928.541.1075 fax
www.swiaz.com

ARIZONA DEPARTMENT OF TRANSPORTATION
INTERMODAL TRANSPORTATION DIVISION
ROADWAY DESIGN SECTION

PLAN AND PROFILE SHEET
STA. 400+00 TO 409+25

LOCATION PRESCOTT VALLEY PIPELINE & CENTRAL CORE MULTI-USE PATHS (PIPELINE PHASE 3)

Registered Professional Engineer (Civil) CERTIFICATE NO. 20578 RICHARD E. ALDRIDGE 9/12/14 Signature Date ARIZONA, U.S.A. EXPIRES 3-31-17

DWG NO. C3-2.01

TRACS NO. SL680 01C | TEA-PRV-0(205)A | ___ OF ___

Sep 12, 2014-1:29pm P:\2012\12050 prescott valley pipeline multi-use path\Drawings\Construction Plans\PP01.dwg SWI-C3D-12

F.H.W.A. REGION	STATE	PROJECT NO.	SHEET NO.	TOTAL SHEETS	AS BUILT
9	ARIZ.	TEA-PRV-0(205)A			
		PRV 0000 YV			

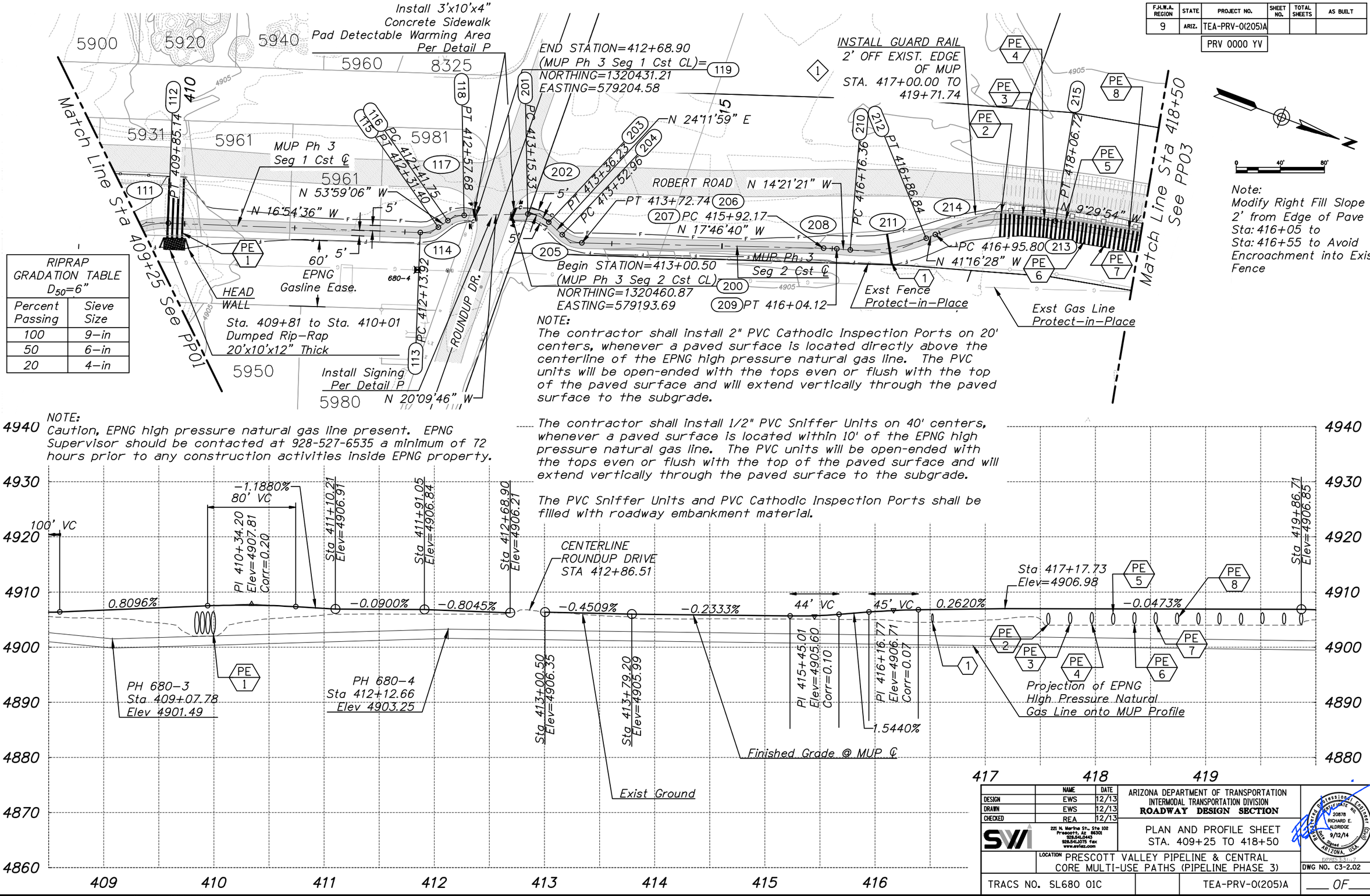

RIPRAP GRADATION TABLE D_{50}=6"

Percent Passing	Sieve Size
100	9-in
50	6-in
20	4-in

	NAME	DATE
DESIGN	EWS	12/13
DRAWN	EWS	12/13
CHECKED	REA	12/13

SVI 221 N. Marina St., Ste 102 Prescott, AZ 86301 928.541.0443 928.541.1075 fax www.svivez.com

ARIZONA DEPARTMENT OF TRANSPORTATION
INTERMODAL TRANSPORTATION DIVISION
ROADWAY DESIGN SECTION

PLAN AND PROFILE SHEET
STA. 409+25 TO 418+50

LOCATION PRESCOTT VALLEY PIPELINE & CENTRAL CORE MULTI-USE PATHS (PIPELINE PHASE 3)

Registered Professional Engineer (Civil) CERTIFICATE NO. 20578 RICHARD E. ALDRIDGE Date Signed 9/12/14 ARIZONA, U.S.A. EXPIRES 3-31-17

DWG NO. C3-2.02

TRACS NO. SL680 01C | TEA-PRV-0(205)A | ___ OF ___

Sep 12, 2014-1:29pm P:\2012\12050 prescott valley pipeline multi-use path\Drawings\Construction Plans\PP02.dwg SWI-C3D-12

F.H.W.A. REGION	STATE	PROJECT NO.	SHEET NO.	TOTAL SHEETS	AS BUILT
9	ARIZ.	TEA-PRV-0(205)A			
		PRV 0000 YV			

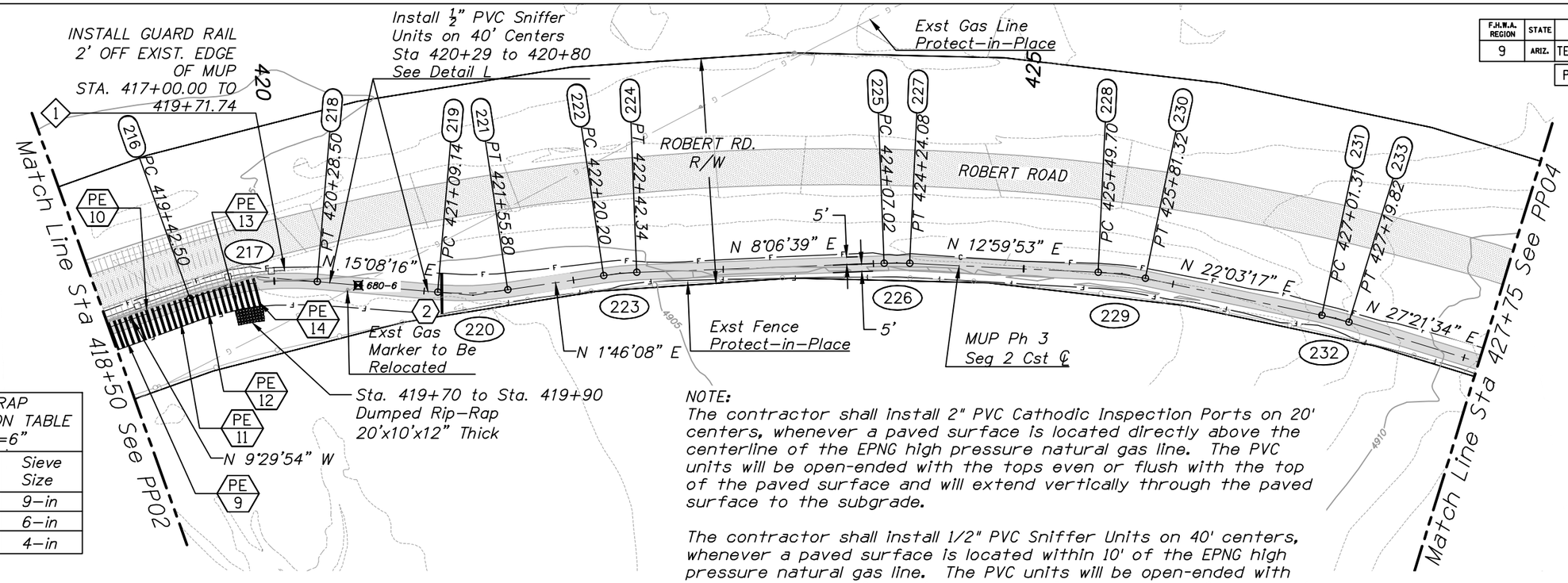

Note:
Modify Right Fill Slope
2' from Edge of Pave
Sta: 421+12 to
Sta: 422+21 and
Sta: 427+37 to
Sta: 428+26 to Avoid
Encroachment into Exist
Fence

RIPRAP GRADATION TABLE D_{50}=6"	
Percent Passing	Sieve Size
100	9-in
50	6-in
20	4-in

NOTE:
The contractor shall install 2" PVC Cathodic Inspection Ports on 20' centers, whenever a paved surface is located directly above the centerline of the EPNG high pressure natural gas line. The PVC units will be open-ended with the tops even or flush with the top of the paved surface and will extend vertically through the paved surface to the subgrade.

The contractor shall install 1/2" PVC Sniffer Units on 40' centers, whenever a paved surface is located within 10' of the EPNG high pressure natural gas line. The PVC units will be open-ended with the tops even or flush with the top of the paved surface and will extend vertically through the paved surface to the subgrade.

The PVC Sniffer Units and PVC Cathodic Inspection Ports shall be filled with roadway embankment material.

NOTE:
Caution, EPNG high pressure natural gas line present. EPNG Supervisor should be contacted at 928-527-6535 a minimum of 72 hours prior to any construction activities inside EPNG property.

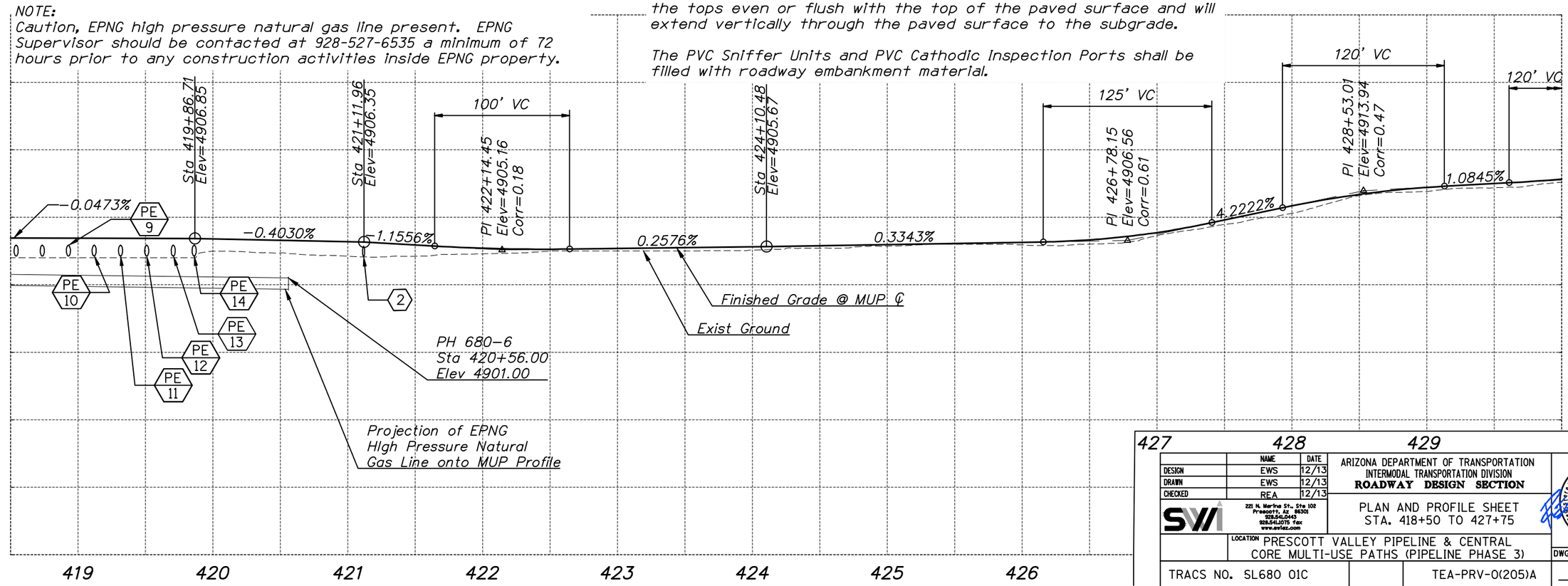

	NAME	DATE
DESIGN	EWS	12/13
DRAWN	EWS	12/13
CHECKED	REA	12/13

SVI
221 N. Marina St., Ste 102
Prescott, AZ 86301
928.541.0445
928.541.0175 Fax
www.swiez.com

ARIZONA DEPARTMENT OF TRANSPORTATION
INTERMODAL TRANSPORTATION DIVISION
ROADWAY DESIGN SECTION

PLAN AND PROFILE SHEET
STA. 418+50 TO 427+75

Registered Professional Engineer (Civil)
CERTIFICATE NO. 20578
RICHARD E. ALDRIDGE
Date Signed 9/12/14
ARIZONA, U.S.A.
Expires 3-31-17

LOCATION PRESCOTT VALLEY PIPELINE & CENTRAL CORE MULTI-USE PATHS (PIPELINE PHASE 3)

DWG NO. C3-2.03

TRACS NO. SL680 01C

TEA-PRV-0(205)A

___ OF ___

Sep 12, 2014-1:30pm

P:\2012\12050 prescott valley pipeline multi-use path\Drawings\Construction Plans\PP03.dwg SWI-C3D-12

F.H.W.A. REGION	STATE	PROJECT NO.	SHEET NO.	TOTAL SHEETS	AS BUILT
9	ARIZ.	TEA-PRV-0(205)A			

PRV 0000 YV

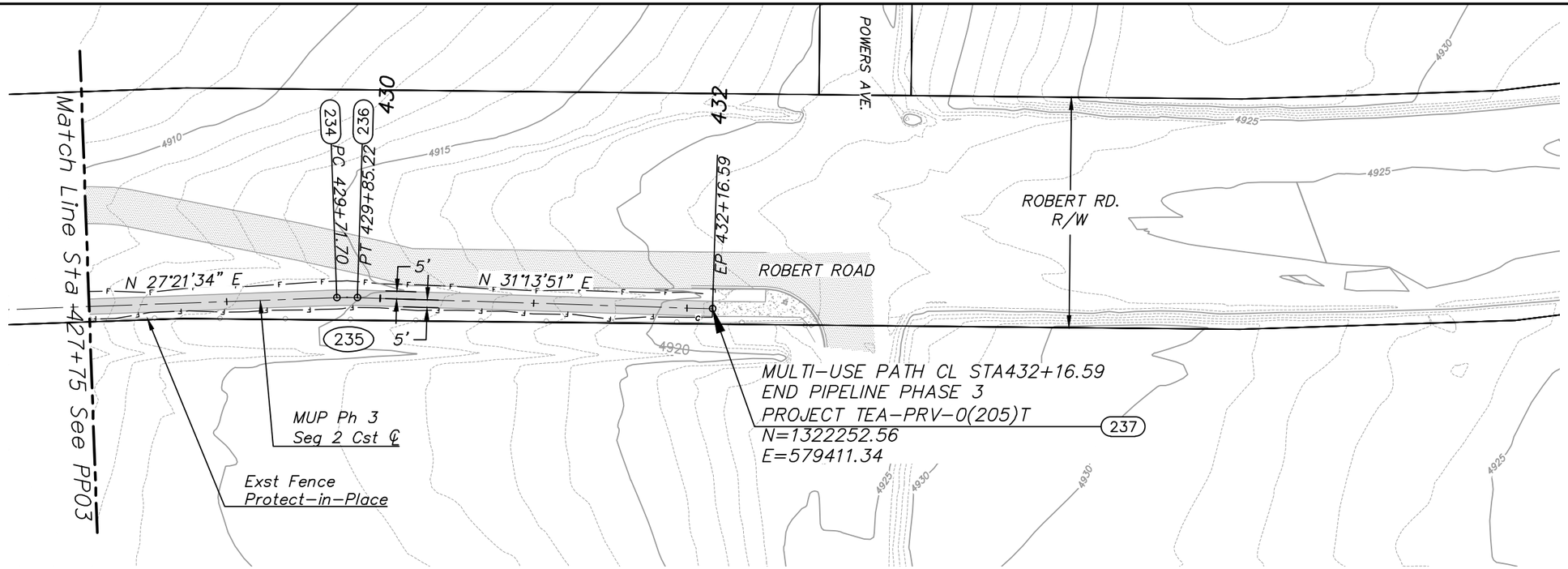

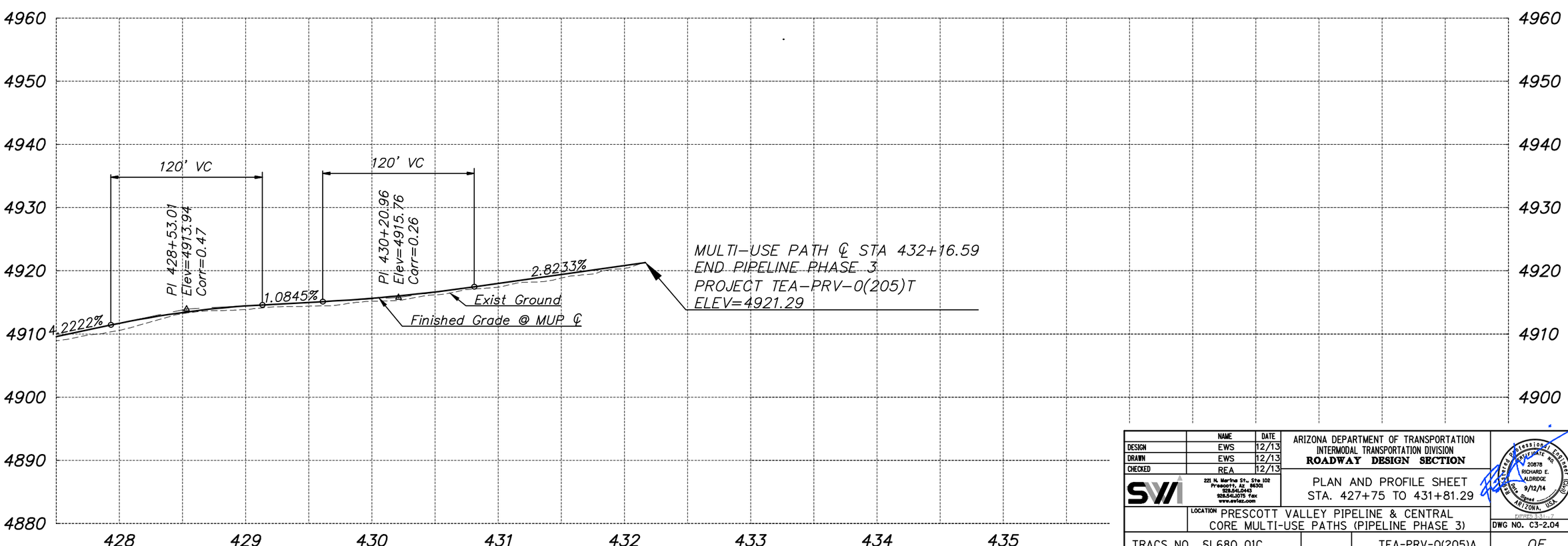

	NAME	DATE
DESIGN	EWS	12/13
DRAWN	EWS	12/13
CHECKED	REA	12/13

SVI
221 N. Marina St., Ste 102
Prescott, AZ 86301
928.541.0443
928.541.0575 Fax
www.svivez.com

ARIZONA DEPARTMENT OF TRANSPORTATION
INTERMODAL TRANSPORTATION DIVISION
ROADWAY DESIGN SECTION

PLAN AND PROFILE SHEET
STA. 427+75 TO 431+81.29

LOCATION PRESCOTT VALLEY PIPELINE & CENTRAL CORE MULTI-USE PATHS (PIPELINE PHASE 3)

Registered Professional Engineer (Civil) CERTIFICATE NO. 20878 RICHARD E. ALDRIDGE Date Signed 9/12/14 ARIZONA, U.S.A.

DWG NO. C3-2.04

TRACS NO. SL680 01C | TEA-PRV-0(205)A | ____ OF ____

Sep 12, 2014-1:31pm

P:\2012\12050 prescott valley pipeline multi-use path\Drawings\Construction Plans\PP04.dwg SWI-C3D-12

F.H.W.A. REGION	STATE	PROJECT NO.	SHEET NO.	TOTAL SHEETS	AS BUILT
9	ARIZ.	TEA-PRV-0(205)A			

PRV 0000 YV

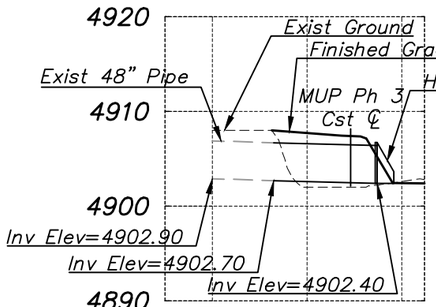

PE 1 48"x64' S=0.0047'/ft
MUP Ph 3 Seg 1 Cst ℄
Sta 409+97.99

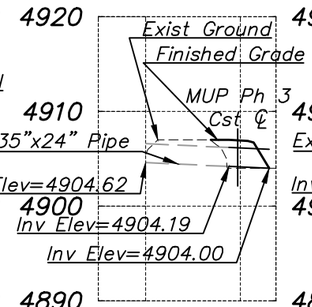

PE 2 (35"x24")x22' S=0.0086'/ft
MUP Ph 3 Seg 2 Cst ℄
Sta 417+57.24

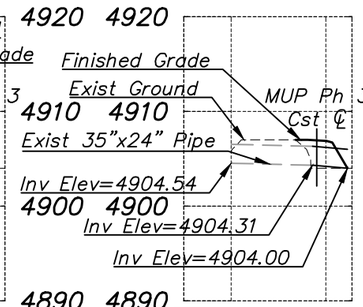

PE 3 (35"x24")x18' S=0.0172'/ft
MUP Ph 3 Seg 2 Cst ℄
Sta 417+77.10

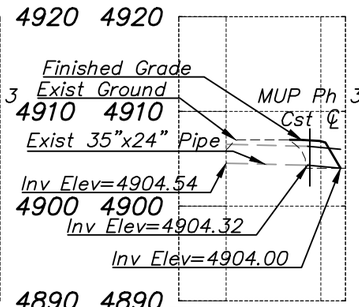

PE 4 (35"x24")x20' S=0.0178'/ft
MUP Ph 3 Seg 2 Cst ℄
Sta 417+96.75

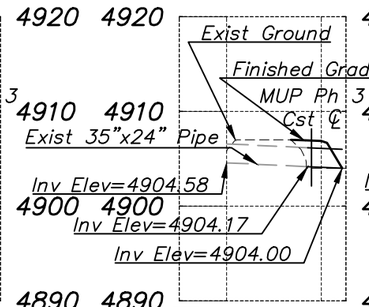

PE 5 (35"x24")x18' S=0.0094'/ft
MUP Ph 3 Seg 2 Cst ℄
Sta 418+16.13

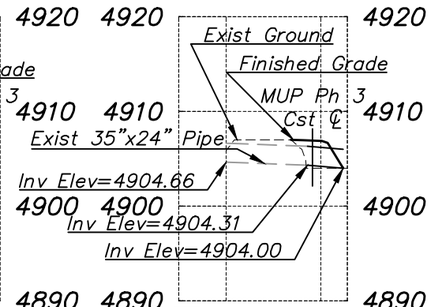

PE 6 (35"x24")x18' S=0.0172'/ft
MUP Ph 3 Seg 2 Cst ℄
Sta 418+35.41

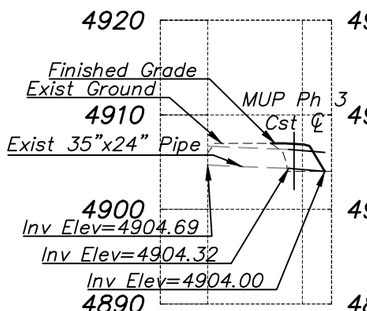

PE 7 (35"x24")x18' S=0.0178'/ft
MUP Ph 3 Seg 2 Cst ℄
Sta 418+54.73

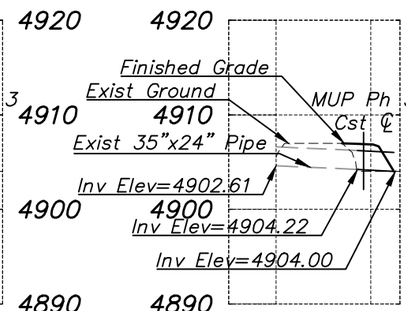

PE 8 (35"x24")x20' S=0.0110'/ft
MUP Ph 3 Seg 2 Cst ℄
Sta 418+74.11

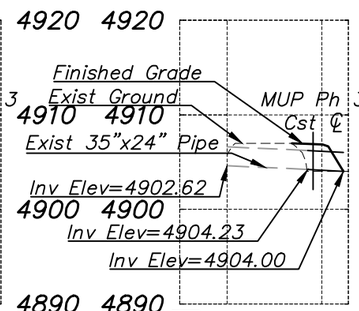

PE 9 (35"x24")x18' S=0.0128'/ft
MUP Ph 3 Seg 2 Cst ℄
Sta 418+93.49

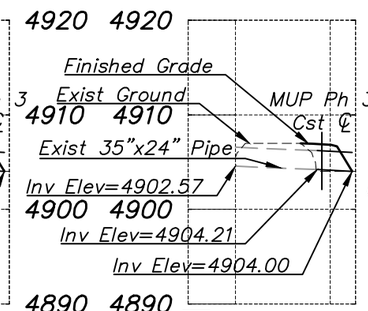

PE 10 (35"x24")x18' S=0.0117'/ft
MUP Ph 3 Seg 2 Cst ℄
Sta 419+12.57

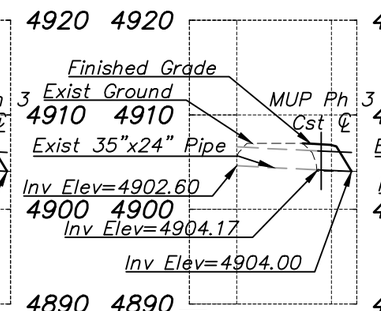

PE 11 (35"x24")x18' S=0.0094'/ft
MUP Ph 3 Seg 2 Cst ℄
Sta 419+32.14

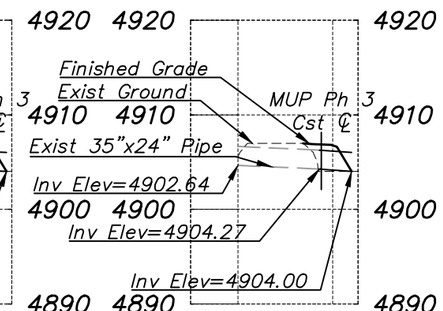

PE 12 (35"x24")x18' S=0.0150'/ft
MUP Ph 3 Seg 2 Cst ℄
Sta 419+51.51

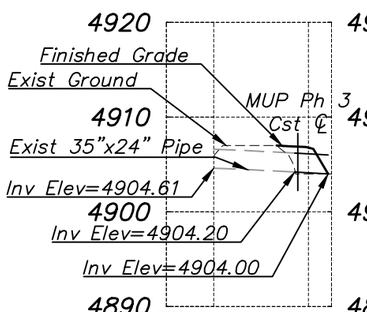

PE 13 (35"x24")x18' S=0.0111'/ft
MUP Ph 3 Seg 2 Cst ℄
Sta 419+71.20

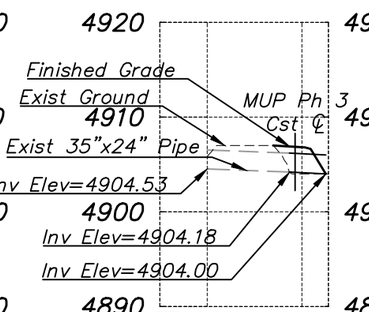

PE 14 (35"x24")x20' S=0.0090'/ft
MUP Ph 3 Seg 2 Cst ℄
Sta 419+86.71

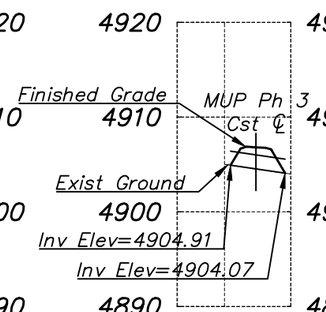

1 18"x30' S=0.0280'/ft
MUP Ph 3 Seg 2 Cst ℄
Sta 416+52.08

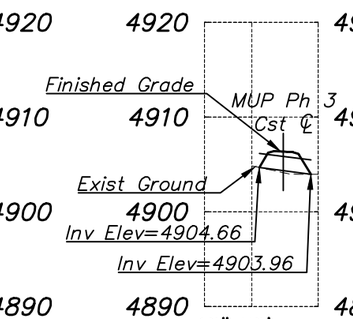

2 18"x30' S=0.0233'/ft
MUP Ph 3 Seg 2 Cst ℄
Sta 421+11.80

	NAME	DATE
DESIGN	EWS	12/13
DRAWN	EWS	12/13
CHECKED	REA	12/13

SWI
221 N. Marina St., Ste 102
Prescott, AZ 86301
928.541.0445
928.541.0175 Fax
www.swiaz.com

ARIZONA DEPARTMENT OF TRANSPORTATION
INTERMODAL TRANSPORTATION DIVISION
ROADWAY DESIGN SECTION

PLAN AND PROFILE SHEET
STA. 400+00 TO 409+25

LOCATION PRESCOTT VALLEY PIPELINE & CENTRAL CORE MULTI-USE PATHS (PIPELINE PHASE 3)

Registered Professional Engineer (Civil) CERTIFICATE NO. 20578 RICHARD E. ALDRIDGE Date Signed 9/12/14 ARIZONA, U.S.A.
EXPIRES 3-31-17

DWG NO. C3-2.05

TRACS NO. SL680 01C | TEA-PRV-0(205)A | ____ OF ____

Sep 12, 2014-1:31pm

P:\2012\12050 prescott valley pipeline multi-use path\Drawings\Construction Plans\PIPE-PROFILES.dwg SWI-C3D-12

DATE- LOCATION- REVISIONS- FINISHED PLANS- SURVEY NO.

F.H.W.A. REGION	STATE	PROJECT NO.	SHEET NO.	TOTAL SHEETS	AS BUILT
9	ARIZ.	TEA-PRV-0(205)A			

PRV 0000 YV

SIGNING GENERAL NOTES:

1. ALL SIGNS SHALL BE IN COMPLIANCE WITH THE MANUAL ON UNIFORM TRAFFIC CONTROL DEVICES (MUTCD), THE ADOT SIGNING AND MARKING STANDARD DRAWINGS, THE ADOT TRAFFIC ENGINEERING MANUAL OF APPROVED SIGNS, THESE PLANS, AND THE SPECIAL PROVISIONS.
2. SIGNING MAY BE MODIFIED AS DIRECTED BY THE ENGINEER. THE ENGINEER MAY SHIFT THE LOCATION OF A SIGN TO A MORE FAVORABLE LOCATION IN ACCORDANCE WITH THE STANDARD DRAWINGS.
3. SHOP DRAWINGS OF THE SIGN PANELS ARE NOT REQUIRED.
4. NORMAL OFFSET FOR ALL SIGNS SHALL BE 12 FEET FROM THE NEAR EDGE OF THE SIGN TO THE EDGE OF THE PAVEMENT UNLESS OTHERWISE NOTED ON THE SIGNING SUMMARY SHEET, ON THE PLANS, OR AS DIRECTED BY THE ENGINEER.
5. ALL SIGN LOCATIONS AND POST LENGTHS ARE APPROXIMATE. THE CONTRACTOR SHALL VERIFY ACTUAL SIGN LOCATIONS WITH THE ENGINEER PRIOR TO CONSTRUCTING THE FOUNDATIONS FOR THE SIGN SUPPORTS. THE CONTRACTOR SHALL VERIFY ACTUAL POST LENGTHS AFTER FINAL GRADING.
6. NORMAL MOUNTING HEIGHT FOR THE BOTTOM OF THE LOWEST SIGN ON THE POST SHALL BE SEVEN FEET ABOVE THE NEAREST SHOULDER EDGE OR TOP OF CURB ELEVATION. THE BOTTOM OF THE SIGN SHALL BE AT LEAST 7 FEET ABOVE THE GROUND UNDER THE SIGN.
7. THE CONTRACTOR SHALL REMOVE EXISTING SIGNING WHERE INDICATED ON THE PLAN SHEET. FOUNDATIONS OF EXISTING SIGNS THAT ARE TO BE REMOVED OR RELOCATED SHALL BE REMOVED A MINIMUM OF 2 FEET BELOW FINISHED GRADE.
8. THE CONTRACTOR SHALL INVENTORY ALL SIGNS TO REMAIN OR BE RELOCATED, AND NOTE DAMAGED SIGNS TO THE ENGINEER BEFORE CONSTRUCTION BEGINS. ALL SIGNS SUBSEQUENTLY DAMAGED SHALL BE REPLACED BY THE CONTRACTOR AT NO COST TO THE DEPARTMENT.
9. ALL NEW SIGNS SHALL BE INSTALLED ON NEW SQUARE TUBE POSTS WITH FOUNDATIONS AS INDICATED IN STD DWGS S-1 AND S-3.
10. ALL METAL HARDWARE SHALL BE STAINLESS STEEL, GALVANIZED CADMIUM PLATED OR ALUMINUM TO PREVENT RUST.
11. ALL SIGNS SHALL BE FABRICATED OF FLAT SHEET ALUMINUM PANELS WITH DIRECT APPLIED OR SILK SCREENED COPY PER SECTIONS 608-2.07 AND 608-2.09 OF THE SPECIFICATIONS. ALL SIGNS SHALL MEET THE CRITERIA ESTABLISHED FOR TYPE IX OR XI SHEETING.
12. QUANTITIES ARE APPROXIMATE AND FOR THE CONTRACTOR'S INFORMATION ONLY.
13. ALL DIMENSIONS ARE IN FEET, UNLESS OTHERWISE NOTED.

SIGNING LEGEND:

⊢●	SIGN
⊢○	EXISTING SIGN

APPROXIMATE SIGNING QUANTITIES

ITEM DESCRIPTION		UNIT	QUANTITY	ITEM NO.
REGULATORY, WARNING OR MARKER SIGN PANEL	TYPE IX OR X1	SQ FT	48	6080005
PERFORATED SIGN POST	2 S	LF	66	6070054
PERFORATED SIGN POST FOUNDATION	CONCRETE	EACH	6	6070060

	NAME	DATE
DESIGN		
DRAWN		
CHECKED		

SWI 221 N. Marina St., Ste 102 Prescott, AZ 86301 928.541.0443 928.541.0115 fax www.swiez.com

ARIZONA DEPARTMENT OF TRANSPORTATION
INTERMODAL TRANSPORTATION DIVISION
ROADWAY DESIGN SECTION

SIGNING PLAN
GENERAL NOTES

Registered Professional Engineer (Civil) CERTIFICATE NO. 20878 RICHARD E. ALDRIDGE 9/12/14 Date Signed ARIZONA, U.S.A.

SCANNED 5-31-17

LOCATION PRESCOTT VALLEY PIPELINE & CENTRAL CORE MULTI-USE PATHS (PIPELINE PHASE 3)

DWG NO. T3-1.01

TRACS NO. SL680 01C | TEA-PRV-0(205)A | ___ OF ___

SURVEY NO. | FINISHED PLANS- | REVISIONS- | LOCATION- | DATE-

Plan Sht No.	Sign Number	MOAS Sign Code	Work: New	Work: Existing: Replace Panel	Work: Existing: Relocate Panel	Work: Existing: Modify Legend	Work: Existing: Remove	Work: Existing: To Remain	Offset (ft)	Mounting Height (ft)	Background Color	Panel: Legend	Panel: Width (in.)	Panel: Height (in.)	Panel: Area (sq. ft.)	Panel: Type	Panel: Bid Item Number	Ground Mounted: Foundations	Ground Mounted: Posts: Type	Ground Mounted: Posts: Total length (ft)	Ground Mounted: New Slipbases	Ground Mounted: Stringer: Type	Ground Mounted: Stringer: Total Length (ft)	Overhead: Structure Type	Overhead: Number of Lights	Remarks
C3-1.01	1	R5-3	X							7	WH	NO MOTOR VEHICLES	24	24	4	RWM	6080005	1	2S	11						BACK TO BACK, SEE DETAIL Q
	2	R1-2	X								WH	YIELD	18	15.6	2	RWM	6080005									LONG MESA DRIVE
C3-1.01	3	W11-15	X							7	YL	TRAIL CROSSING	30	30	6	RWM	6080005	1	2S	11						SEE DETAIL Q, LONG MESA DRIVE
	4	W11-15P	X								YL	TRAIL CROSSING (PLAQUE)	24	12	2	RWM	6080005									
	5	W16-7P	X								YL	DOWNWARD DIRECTIONAL ARROW	24	12	2	RWM	6080005									
C3-1.02	1	R5-3	X							7	WH	NO MOTOR VEHCLES	24	24	4	RWM	6080005	1	2S	11						BACK TO BACK, SEE DETAIL Q
	2	R1-2	X								WH	YIELD	18	15.6	2	RWM	6080005									ROUNDUP DRIVE
C3-1.02	3	W11-15	X							7	YL	TRAIL CROSSING	30	30	6	RWM	6080005	1	2S	11						SEE DETAIL Q, ROUNDUP DRIVE
	4	W11-15P	X								YL	TRAIL CROSSING (PLAQUE)	24	12	2	RWM	6080005									
	5	W16-7P	X								YL	DOWNWARD DIRECTIONAL ARROW	24	12	2	RWM	6080005									
C3-1.02	6	R5-3	X							7	WH	NO MOTOR VEHCLES	24	24	4	RWM	6080005	1	2S	11						BACK TO BACK, SEE DETAIL Q
	7	R1-2	X								WH	YIELD	18	15.6	2	RWM	6080005									ROUNDUP DRIVE
C3-1.02	8	W11-15	X							7	YL	TRAIL CROSSING	30	30	6	RWM	6080005	1	2S	11						SEE DETAIL Q, ROUNDUP DRIVE
	9	W11-15P	X								YL	TRAIL CROSSING (PLAQUE)	24	12	2	RWM	6080005									
	10	W16-7P	X								YL	DOWNWARD DIRECTIONAL ARROW	24	12	2	RWM	6080005									

F.H.W.A. REGION	STATE	PROJECT NO.	SHEET NO.	TOTAL SHEETS	AS BUILT
9	ARIZ.	TEA-PRV-0(205)A			

PRV 0000 YV

Notes:
1. The Engineer shall verify post lengths and elevations.
2. The Engineer may shift a sign in order to achieve a more desirable location.
3. Quantities are approximate and for the contractor's information only.

Panel Types:
RWM: Regulatory, Warning or Marker
F-DA: Flat-sheet aluminum with direct applied or silk-screened characters
F-Dem: Flat-sheet aluminum with demountable characters
Ext: Aluminum extrusions
Sheeting Type:
See Special Provisions Section 1007

Stringer Types:
P: Square-tube post
T: T-Section
Post Types:
2S-2" Single
2T-2" Telescoping
2 1/2S-21/2" Single
2 1/2T-21/2" Telescoping

	NAME	DATE
DESIGN		
DRAWN		
CHECKED		

SVI 221 N. Marina St., Ste 102 Prescott, Az. 86301 928.541.0443 928.541.1075 Fax www.svi-az.com

ARIZONA DEPARTMENT OF TRANSPORTATION
INTERMODAL TRANSPORTATION DIVISION
ROADWAY DESIGN SECTION

SIGN SUMMARY SHEET

LOCATION PRESCOTT VALLEY PIPELINE & CENTRAL CORE MULTI-USE PATHS (PIPELINE PHASE 3)

Registered Professional Engineer (Civil) CERTIFICATE NO. 20878 RICHARD E. ALDRIDGE 9/12/14 Date Signed ARIZONA, U.S.A.

SCANFEB 3-31-17

DWG NO. T3-2.01

TRACS NO. SL680 01C | TEA-PRV-0(205)A | ___ OF ___

Sep 12, 2014-1:31pm

P:\2012\12050 prescott valley pipeline multi-use path\Drawings\Construction Plans\SSUM.dwg SWI-C3D-12

F.H.W.A. REGION	STATE	PROJECT NO.	SHEET NO.	TOTAL SHEETS	AS BUILT
9	ARIZ.	TEA-PRV-0(205)A			

PRV 0000 YV

TRAFFIC CONTROL GENERAL NOTES:

1. THE TRAFFIC CONTROL PLANS REPRESENT A SUGGESTED METHOD FOR TRAFFIC CONTROL DURING CONSTRUCTION. THE CONTRACTOR SHALL PREPARE TRAFFIC CONTROL PLANS IN ACCORDANCE WITH SECTION 701 OF THE SPECIFICATIONS. ALL TRAFFIC CONTROL PLANS ARE SUBJECT TO THE APPROVAL OF THE ENGINEER BEFORE BEGINNING CONSTRUCTION.
2. ADJUSTMENTS TO THE DETAILS PROVIDED OF THESE TRAFFIC CONTROL PLANS AND REQUIREMENTS MAY BE NECESSARY DUE TO CONSTRUCTION ACTIVITIES, AS DIRECTED BY THE ENGINEER.
3. THE CONTRACTOR SHALL MAINTAIN TWO-WAY TRAFFIC ON ALL STREETS AT ALL TIMES OR AS DIRECTED BY THE ENGINEER.
4. THE CONTRACTOR SHALL MAINTAIN ACCESS TO ALL LOCAL BUSINESSES.
5. THE CONTRACTOR SHALL MAINTAIN TRAFFIC ON A PAVED SURFACE AT ALL TIMES.
6. ALL EXISTING REGULATORY, WARNING AND MARKING SIGNS IN CONFLICT WITH THE TRAFFIC CONTROL SIGNS SHALL BE REMOVED, RELOCATED OR COVERED IN PLACE, AS DIRECTED BY THE ENGINEER. THE CONTRACTOR SHALL STORE AND REINSTALL ITEMS WHICH HAVE BEEN REMOVED OR RELOCATED IN A MANNER APPROVED BY THE ENGINEER AT NO ADDITIONAL COST TO THE DEPARTMENT.
7. SPEED LIMIT SIGNING IS PRELIMINARY AND IS SUBJECT TO REVIEW AND CHANGE BY THE ENGINEER AS DICTATED BY FIELD CONDITIONS.
8. USE DOUBLE FINES SIGNING WHEN WORKERS ARE PRESENT. SEE FIGURE SA-12 OF THE ADOT TRAFFIC CONTROL DESIGN GUIDELINES 2010.
9. THE RETROREFLECTIVE SHEETING ON ALL CONSTRUCTION SIGNS SHALL MEET THE MINIMUM CRITERIA ESTABLISHED IN SECTION 1007 OF THE SPECIFICATIONS.
10. ALL CONSTRUCTION SIGNS SHALL HAVE BLACK LETTERS ON AN ORANGE BACKGROUND.
11. CONSTRUCTION SIGNS SHALL NOT BE DISPLAYED TO TRAFFIC MORE THAN 24 HOURS PRIOR TO THE ACTUAL START OF CONSTRUCTION. THESE SIGNS MAY BE INSTALLED SOONER BUT THEY MUST BE COVERED OR TURNED AWAY FROM TRAFFIC. THE COST FOR COVERING OR TURNING THEM SHALL BE CONSIDERED PART OF THE SIGN INSTALLATION COST. NO FURTHER COMPENSATION WILL BE MADE. THESE SIGNS SHALL BE REMOVED WITHIN 24 HOURS AFTER COMPLETION OF THE CONSTRUCTION ACTIVITIES.
12. WHEN TRAFFIC CONTROL DEVICES ARE NOT IN USE, THEY SHALL BE MOVED AT LEAST 30 FEET FROM THE ROADWAY, IF POSSIBLE. OTHERWISE THEY SHALL BE COVERED OR TURNED AWAY FROM TRAFFIC.
13. DRUMS, TYPE II BARRICADES AND VERTICAL PANELS SHALL BE PLACED 20 FEET ON CENTER IN TAPERS AND 40 FEET ON CENTER IN TANGENTS.
14. THE CONTRACTOR MAY SUBSTITUTE TYPE I BARRICADES FOR TYPE II BARRICADES AS LONG AS THE REFLECTIVE AREA ON THE TOP PANEL OF THE TYPE I BARRICADE IS EQUIVALENT OR GREATER THAN THE REFLECTIVE AREA OF A TYPE II BARRICADE.
15. FOR TRAFFIC CONTROL LEFT IN PLACE OVER NIGHT, A TYPE C STEADY-BURNING YELLOW LIGHT SHALL BE MOUNTED ON EVERY DRUM, TYPE II BARRICADE, AND VERTICAL PANEL IN TAPERS; AND ON ALTERNATING DRUMS, TYPE II BARRICADES, OR VERTICAL PANELS IN TANGENTS.
16. DURING NIGHTTIME THE CONTRACTOR SHALL NOT UTILIZE CONES FOR CHANNELIZATION DEVICES UNLESS OTHERWISE DIRECTED BY THE ENGINEER.

DESIGN REFERENCES:

MUTCD - MANUAL ON UNIFORM TRAFFIC CONTROL DEVICES PART 6, TEMPORARY TRAFFIC CONTROL, 2009 EDITION AS AMENDED BY THE JANUARY, 2012 ADOT SUPPLEMENT.

TCDG - ADOT TRAFFIC CONTROL DESIGN GUIDELINES, 2010.

	NAME	DATE
DESIGN		
DRAWN		
CHECKED		

SWI
221 N. Marine St., Ste 102
Prescott, AZ 86301
928.541.0443
928.541.1075 fax
www.swiaz.com

ARIZONA DEPARTMENT OF TRANSPORTATION
INTERMODAL TRANSPORTATION DIVISION
ROADWAY DESIGN SECTION

TRAFFIC CONTROL
GENERAL NOTES

Registered Professional Engineer (Civil) CERTIFICATE NO. 20878 RICHARD E. ALDRIDGE Date Signed 9/12/14 ARIZONA, U.S.A.

SCRIPS 3.31.17

LOCATION PRESCOTT VALLEY PIPELINE & CENTRAL CORE MULTI-USE PATHS (PIPELINE PHASE 3)

DWG NO. T3-3.01

TRACS NO. SL680 01C | TEA-PRV-0(205)A | ___ OF ___

SURVEY NO. | FINISHED PLANS- | REVISIONS- | LOCATION- | DATE-

F.H.W.A. REGION	STATE	PROJECT NO.	SHEET NO.	TOTAL SHEETS	AS BUILT
9	ARIZ.	TEA-PRV-0(205)A			

PRV 0000 YV

MAINTENANCE OF TRAFFIC

ACTIVITY NO	CONSTRUCTION ACTIVITY	TRAFFIC CONTROL	COMMENTS
1	PHASE 1 ESTABLSH WORK ZONE AT CROSS ROADS ADVANCE SIGNING	OPERATION PER MUTCD TYPICAL APPLICATION 1 (TA-1). SETUP PER TA-1 IN EACH TRAVEL DIRECTION IN ADVANCE OF ROADWAY CROSSINGS AND WORK ZONES.	SIGNS ARE TO REMAIN IN PLACE FOR THE DURATION OF THE PIPELINE PHASE 3 PROJECT.
2	PHASE 2 CONSTRUCT MULTI-USE PATH NOT ADJACENT TO EXISTING ROADWAYS	WORK PERFORMED IS NOT LOCATED NEAR EXISTING ROADWAYS. NO ADDITIONAL TRAFFIC CONTROL IS REQUIRED. TRAFFIC CONTROL FOR ACTIVITY 2 IS THE SAME AS PROVIDED UNDER ACTIVITY 1.	WORK SHALL BE COMPLETED FROM 7A TO 7P, MONDAY THRU FRIDAY ONLY. NO NIGHT WORK IS PERMITTED.
3	PHASE 3A CONSTRUCT MULTI-USE PATH INSTALL SIGNAGE AT LONE MESA DR	OPERATION PER MUTCS TYPICAL APPLICATION 1 (TA-1) OR 6 (TA-6). SETUP PER TA-1 OR TA-6 IN EACH TRAVEL DIRECTION IN ADVANCE OF ROADWAY CROSSINGS AND WORK ZONES.	WORK SHALL BE COMPLETED FROM 7A TO 7P, MONDAY THRU FRIDAY ONLY. NO NIGHT WORK IS PERMITTED.
	PHASE 3B CONSTRUCT MULTI-USE PATH INSTALL SIGNAGE AT ROUNDUP DR	OPERATION PER MUTCS TYPICAL APPLICATION 1 (TA-1) OR 6 (TA-6). SETUP PER TA-1 OR TA-6 IN EACH TRAVEL DIRECTION IN ADVANCE OF ROADWAY CROSSINGS AND WORK ZONES.	WORK SHALL BE COMPLETED FROM 7A TO 7P, MONDAY THRU FRIDAY ONLY. NO NIGHT WORK IS PERMITTED.

NOTE:

THE ORDER OF CONSTRUCTION ACTIVITIES DOES NOT CONSTITUTE A SEQUENCE OF CONSTRUCTION. THE CONTRACTOR SHALL PERFORM THE WORK IN THE MOST EXPEDITIOUS MANNER CONSISTENT WITH THE PLANS AND SPECIAL PROVISIONS WITH THE APPROVAL OF THE ENGINEER. ANY MODIFICATIONS TO THE ORDER OF CONSTRUCTION ACTIVITIES SHALL REQUIRE REVIEW AND APPROVAL BY THE ENGINEER.

	NAME	DATE
DESIGN		
DRAWN		
CHECKED		

SVA
221 N. Marine St., Ste 102
Prescott, Az. 86301
928.541.0443
928.541.1075 fax
www.svaiaz.com

ARIZONA DEPARTMENT OF TRANSPORTATION
INTERMODAL TRANSPORTATION DIVISION
ROADWAY DESIGN SECTION

TRAFFIC CONTROL PLAN
MAINTENANCE OF TRAFFIC

Registered Professional Engineer (Civil)
CERTIFICATE NO. 20878
RICHARD E. ALDRIDGE
9/12/14
Date Signed
ARIZONA, U.S.A.
EXPIRES 3-31-17

LOCATION PRESCOTT VALLEY PIPELINE & CENTRAL CORE MULTI-USE PATHS (PIPELINE PHASE 3)

DWG NO. T3-3.02

TRACS NO. SL680 01C | TEA-PRV-0(205)A | ___ OF ___

SURVEY NO. | FINISHED PLANS- | REVISIONS- | LOCATION- | DATE-

F.H.W.A. REGION	STATE	PROJECT NO.	SHEET NO.	TOTAL SHEETS	AS BUILT
9	ARIZ.	TEA-PRV-0(205)A			

PRV 0000 YV

APPROXIMATE TRAFFIC CONTROL QUANTITIES							
ITEM NO.	BID ITEM DESCRIPTION	UNITS	CONSTRUCTION ACTIVITIES				TOTALS
			PHASE 1	PHASE 2	PHASE 3A	PHASE 3B	
	DURATION (CALENDAR DAYS)	DAYS	70	50	20	20	70
7016030	BARRICADE (VERTICAL PANELS, TYPE II)	EACH-DAY	0	0	395	395	790
7016032	PORTABLE SIGN STANDS (RIGID)	EACH-DAY	665	0	30	30	725
7016037	WANING LIGHTS (TYPE C)	EACH-DAY	0	0	395	395	790
7016051	TEMPORARY SIGN (LESS THAN 10 S.F.)	EACH-DAY	665	0	30	30	725

	NAME	DATE
DESIGN		
DRAWN		
CHECKED		

SVM
221 N. Marine St., Ste 102
Prescott, Az. 86301
928.541.0443
928.541.1075 fax
www.svmaz.com

ARIZONA DEPARTMENT OF TRANSPORTATION
INTERMODAL TRANSPORTATION DIVISION
ROADWAY DESIGN SECTION

TRAFFIC CONTROL PLAN
APPROXIMATE QUANTITIES

LOCATION PRESCOTT VALLEY PIPELINE & CENTRAL CORE MULTI-USE PATHS (PIPELINE PHASE 3)

Registered Professional Engineer (Civil)
CERTIFICATE NO. 20878
RICHARD E. ALDRIDGE
9/12/14
Signed
ARIZONA, U.S.A.
EXPIRES 3-31-17

DWG NO. T3-3.03

TRACS NO. SL680 01C

TEA-PRV-0(205)A

___ OF ___

SURVEY NO. | FINISHED PLANS- | REVISIONS- | LOCATION- | DATE-

SURVEY NO. | FINISHED PLANS- | REVISIONS- | LOCATION- | DATE-

Sep 12, 2014-1:31pm P:\2012\12050 prescott valley pipeline multi-use path\Drawings\Construction Plans\TC-QUANTITIES.dwg SWM-C3D-12

F.H.W.A. REGION	STATE	PROJECT NO.	SHEET NO.	TOTAL SHEETS	AS BUILT
9	ARIZ.	TEA-PRV-0(205)A			
		PRV 0000 YV			

PART 1 - To be completed by the Landscape Architect or Design Engineer

I. PROJECT DESCRIPTION

A. Owner Name and Address:

Arizona Department of Transportation
205 South 17th Avenue
Phoenix, Arizona 85007-3213

B. Project TRACS Number: SL680 01C

C. Project Location: Prescott Valley Pipeline Phase 3

City: Prescott Valley County: Yavapai

Beginning Latitude (NAD 83): 34°36'50" N
Beginning Longitude (NAD 83): 112°18'46" W

Ending Latitude (NAD 83): 34°37'16" N
Ending Longitude (NAD 83): 112°18'59" W

To obtain the project latitude/longitude data, refer to the Flash Earth web link below (Bing Maps with labels): http://www.flashearth.com/

D. Project Description: New multi-use path construction and corresponding improvements.

II. HYDROLOGIC INFORMATION

A. Project Size:
Length (Mi.) 0.61
Area (Ac.) 0.73

B. Area to be Graded (Ac.) *: 1.48

* Blading of the shoulder build-up area is considered as grading and ground disturbance and should be covered by stormwater and/or other environmental regulations.

C. Percentage of the site that is impervious before and after construction: 0.9
Percentage before Construction: 0.9
Percentage after Construction:

D. Receiving Water(s), refer to the Arizona Department of Water Resources Web Link below (USGS Topo) : https://gisweb.azwater.gov/WellRegistry/Default.aspx

Agua Fria River

III. PRESERVATION OF EXISTING VEGETATION

A. In accordance with the specifications, existing vegetation will be preserved. Clearing limits shall be confined to areas that require grading. Existing vegetation outside the boundaries of the cleared area shall be protected from damage by construction activities. Existing trees within the area to be cleared shall be preserved and protected, wherever possible.

IV. SOIL STABILIZATION MEASURES

A. All disturbed soil, which will not be paved, riprapped or otherwise covered to prevent erosion, will be revegetated and/or landscaped in accordance with the project plans and specifications.

B. Scheduling of the revegetation effort can be found on PART 2 of this sheet under SCHEDULE OF MAJOR ACTIVITIES.

V. MEASURES TO CONTROL EROSION AND SEDIMENT

A. Temporary Erosion and Sediment Controls: (Refer to the Following SWPPP Site Plan and Specifications)

- ___ Erosion Control Mattings
- ___ Temporary Diversion Dikes
- ___ Check Dams
- ___ Rock Inlet/Outlet Protection
- ___ Sediment Control Berms
- ___ Silt Fences
- X Wattles (Excelsior/Straw)
- ___ Excelsior Logs / Sediment Logs
- ___ Seeding (Class II with mulch)
- ___ Others Describe:

B. Permanent Erosion and Sediment Controls and Post-construction Storm Water Management Measures: (Refer to SWPPP Site Plan and Specifications)

- ___ Crown Ditch/Dike
- ___ Rock Protection
- ___ Rock Riprap Channel Lining
- ___ Sediment Basin
- ___ Embankment Curb
- ___ Spillways and Downdrains
- ___ Minibenching
- X Seeding established as a perennial vegetative cover with a density of 70% of the native background vegetative cover.
- ___ Others Describe:

VI. MAINTENANCE AND INSPECTIONS

A. Frequency of Inspections:

___ At least once every 7 calendar days, OR
X Every 14 calendar days and within 24 hours after a rainfall of 0.5 inches (12.7 mm) or more.

NOTE: RAINFALL GAUGE TO BE KEPT ON-SITE TO DETERMINE DEPTH OF RAINFALL

B. Inspection Procedure:

ADOT's Contractor's Inspection Log and Compliance Evaluation Report (CER) will be completed by the contractor or his representative and will be kept on file for 3 years. A signed copy of the CER will be sent to the ADOT resident engineer. If repairs are necessary, they shall be initiated within 24 hours of the inspection report.

PART 2 - To be completed by ADOT & CONTRACTOR

http://www.azdot.gov/Inside_adot/OES/Water_Quality/Stormwater/Docs/swppp_construction_template.dot

I. SCHEDULE OF MAJOR ACTIVITIES

A. Project Schedule:

Start Date:

End Date:

B. Construction Sequencing Schedule: (Attach Additional Sheets)
Construction Activities

II. INVENTORY OF POLLUTANTS

A. The materials or substances checked below are expected to be onsite during construction:

- ___ Concrete
- ___ Asphalt
- ___ Paints
- ___ Fertilizer
- ___ Herbicides
- ___ Wood
- ___ Fuel
- ___ Oil
- ___ Others, List:

III. POLLUTION CONTROL MEASURES

A. Other Best Management Practices:

- ___ Wind Erosion and Dust Control
- ___ Solid Waste Management
- ___ Equipment Maintenance Procedures
- ___ Designated Washout Areas
- ___ Stabilized Construction Entrance
- ___ Protected Chemical and Material Storage Area
- ___ Other, Describe:

IV. SPILL PREVENTION AND RESPONSE

A. Spill Prevention:
The procedures outlined in the Best Management Practices listed under Pollution Control Measures will be followed to prevent and contain spills of hazardous material. These preventative action include BMP's on equipment maintenance and proper handling, storage and disposal of chemicals and materials. All manufacturer's recommendations for usage, clean-up and disposal shall be followed.

B. Spill Response:
In the event of any accidental spill of chemicals or hazardous materials, contact the ADOT Traffic Operations Center at 800-379-3701. If a reportable quantity is discharged into the storm water, ADOT shall contact the National Response Center and document the spill to the EPA. ADOT's Hazardous Materials Specialist shall provide instructions.

V. CERTIFICATION OF COMPLIANCE WITH FEDERAL, STATE AND LOCAL REGULATIONS

A. This Storm Water Pollution Prevention Plan (SWPPP) has been prepared in accordance with the latest updated version of ADOT's EROSION AND POLLUTION CONTROL MANUAL FOR HIGHWAY DESIGN AND CONSTRUCTION, published by ADOT Intermodal Transportation Division.

___ SWPPP is in compliance with other Federal, State Laws, or Local Regulations.

VI. POLLUTION PREVENTION PLAN CERTIFICATION

A. I certify under penalty of law that I have personally examined and am familiar with the information submitted in this application and all attachments and that, based on my inquiry of those persons immediately responsible for obtaining the information contained in the application, I believe that the information is true, accurate and complete. I am aware that there are significant penalties for submitting false information, including the possibility of fine and imprisonment. (Applies to VI. B., C., and D)

B. The operator/contractor as defined in AZPDES should sign the SWPPP in accordance with CGP Part VIII. J, and retain the SWPPP on-site at the construction site or other location easily accessible during normal business hours.

Signature: (operator/contractor)
Date:
Name:
Title:
Company:

C. ADOT Resident Engineer

Signature: (owner)
Date:
Name:
Title:
ADOT ~~District:~~

D. MUNICIPALITY for Municipal Separate Storm Sewer System (MS4)

Signature:
Date:
Name:
Title:
MS4 Name:

VII. OTHER REQUIREMENTS

A. A copy of the General Permit and NOI are attached in accordance to AZPDES General Permit for Storm Water Discharges From Construction Activities To The Water Of The United States.

B. Projects that are within ¼ mile of impaired or unique waters require the SWPPP to be sent to ADEQ in combination with the NOI. Refer to the Arizona Outstanding, Impaired and Not-Attaining Waters *.PDF Maps by County web link:

http://www.azdot.gov/inside_adot/OES/Water_Quality/Stormwater/outstanding_unique_waters_maps_by_county.asp

C. For further requirements, check the ADEQ's Smart NOI Web Page:
https://az.gov/app/smartnoi/

	NAME	DATE
DESIGN		
DRAWN		
CHECKED		

SVI 221 N. Marine St., Ste 102 Prescott, AZ 86301 928.541.0443 928.541.1075 fax www.sviaz.com

ARIZONA DEPARTMENT OF TRANSPORTATION
INTERMODAL TRANSPORTATION DIVISION
ROADWAY DESIGN SECTION

AZPDES SWPPP INDEX SHEET

LOCATION PRESCOTT VALLEY PIPELINE & CENTRAL CORE MULTI-USE PATHS (PIPELINE PHASE 3)

Registered Professional Engineer (Civil) CERTIFICATE NO. 20878 RICHARD E. ALDRIDGE Date Signed 9/12/14 ARIZONA, U.S.A.
EXPIRES 6-31-17

DWG NO. E3-1.01

TRACS NO. SL680 01C | TEA-PRV-0(205)A | ___ OF ___

DATE- LOCATION- REVISIONS- FINISHED PLANS- SURVEY NO.

F.H.W.A. REGION	STATE	PROJECT NO.	SHEET NO.	TOTAL SHEETS	AS BUILT
9	ARIZ.	TEA-PRV-0(205)A			

PRV 0000 YV

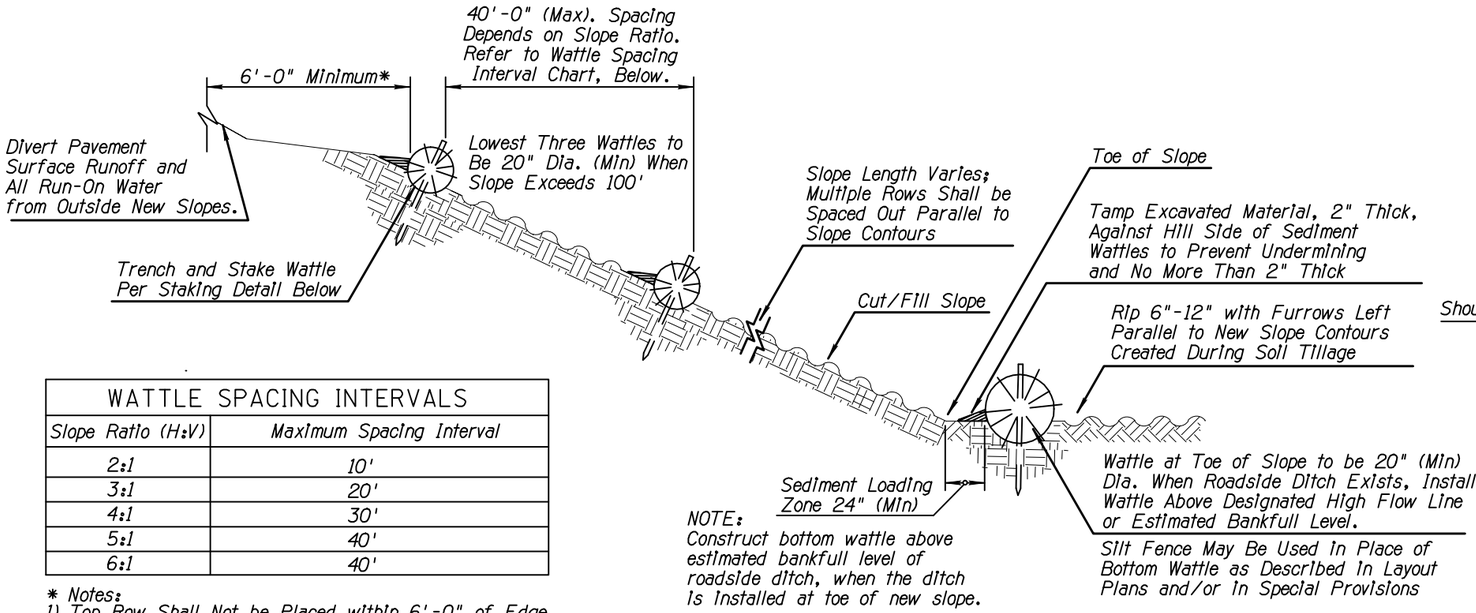

NOTE:
Construct bottom wattle above estimated bankfull level of roadside ditch, when the ditch is installed at toe of new slope.

SECTION (NTS)

WATTLE SPACING INTERVALS	
Slope Ratio (H:V)	Maximum Spacing Interval
2:1	10'
3:1	20'
4:1	30'
5:1	40'
6:1	40'

* Notes:
1) Top Row Shall Not be Placed within 6'-0" of Edge of Pavement and 9'-0" from Outside Surface of Barrier.
2) For erosive soils, place rows of wattles closer together.
3) For soils with low erosive potential, place rows of wattles further apart.

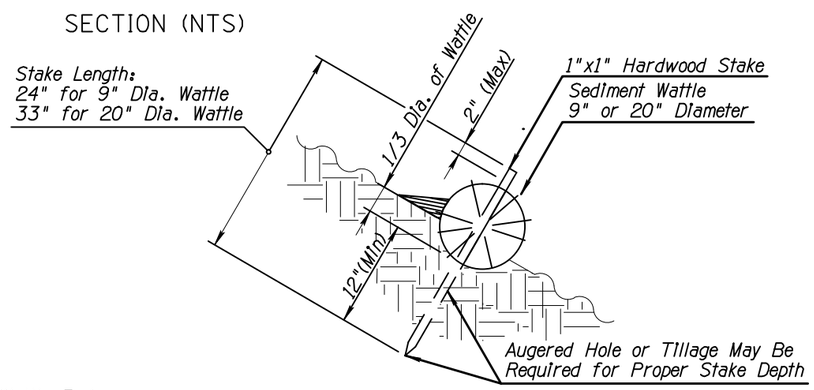

SEDIMENT WATTLE STAKING DETAIL (NTS)

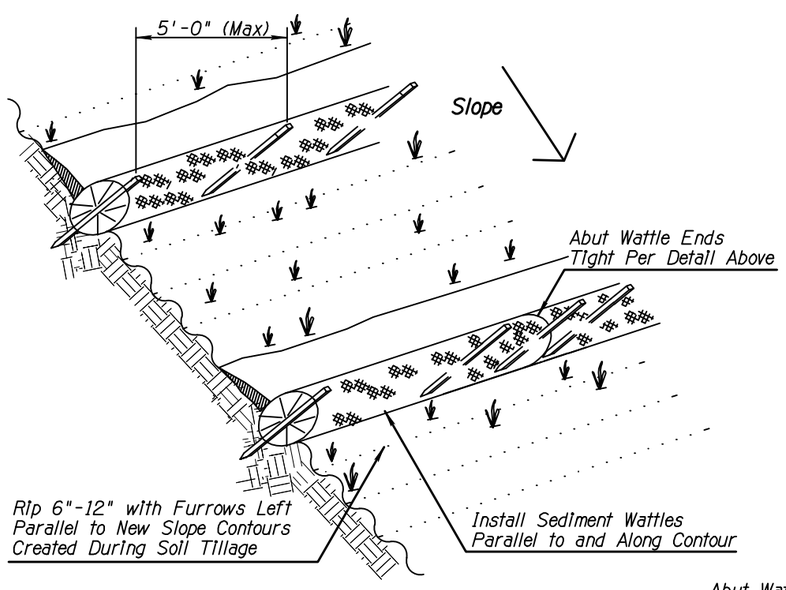

SEDIMENT WATTLE LAYOUT (NTS)

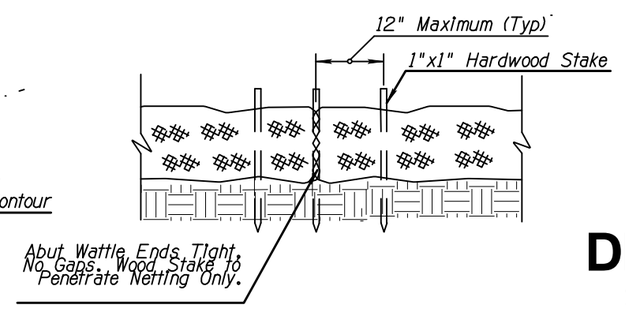

SEDIMENT WATTLE OVERLAP (NTS)

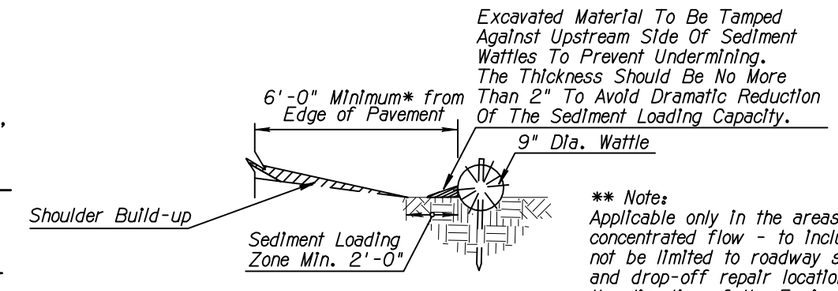

** Note:
Applicable only in the areas of concentrated flow - to include but not be limited to roadway sag spots and drop-off repair locations as per the direction of the Engineer.

NEW SHOULDER BUILDUP ** PROTECTION SECTION (NTS)

NOTES:

1. Install Sediment Wattles as slopes are constructed to grade or as directed by the Engineer. Select, install and maintain in conformance with manufacturers' specifications to meet site conditions for slope protection and in accordance with good engineering practices. No Sediment Wattles shall be installed in urban freeway medians, nor where cable barrier systems are employed.
2. Sediment Wattles shall be in continuous contact with trench bottom and sides. Do not overlap wattle ends on top of each other. A 20" Dia. wattle may be made from 2-3 rolled excelsior or straw blankets.
3. Butt adjoining wattles tightly against each other. Drive the first end stake of the second wattle at an angle toward the first wattle to help abut them tightly.
4. Repair any rills or gullies promptly. Make field adjustments and corrections of Wattle BMP immediately if it is causing flooding, erosion, and/or affecting roadway safety.
5. Construction of cut slopes 2:1 and steeper in soil and rock materials that can be ripped shall be constructed, whenever possible, by Minibenching. Refer to Slope Minibenching BMP Detail.
6. Loosening surface soil is not required where Minibenches are used. For seeded areas, tillage shall be performed to form minor ridges and furrows parallel to new slope contours and as specified in Section 805 of the Standard Specifications and these special provisions.
7. Divert and direct run-on water from outside of the slopes to the spillways and/or rock riprap/rock mulch. Diversion dikes and/or ditches are necessary on natural undisturbed slopes beyond the top limits of new slopes to divert run-on water.
8. Installation and maintenance of Sediment Wattle BMPs shall not negatively impact traffic safety, nor the designed function of roadway or bridge drainage facilities.
9. Install and maintain Sediment Wattle BMPs to carry the stormwater of at least 2-year, 24-hour events.
10. The Sediment Wattle BMP's pay/bid item shall include all materials used for this BMP: all ground preparation, furnishing, installing, maintenance, final removal, and disposal of this temporary BMP, as well as returning the area to an acceptable condition as approved by the Engineer.
11. Refer to Standard Specification Section 810-2.06(C) for Sediment Wattle material specifications.
12. Make field adjustments and corrections to ensure NO sensitive biological resources (native species / habitats) will be adversely impacted.

DETAIL E3
SEDIMENT WATTLE

	NAME	DATE
DESIGN	EWS	12/13
DRAWN	EWS	12/13
CHECKED	REA	12/13

SVI
221 N. Marina St., Ste 102
Prescott, AZ 86301
928.541.0445
928.541.1075 fax
www.svivez.com

ARIZONA DEPARTMENT OF TRANSPORTATION
INTERMODAL TRANSPORTATION DIVISION
ROADWAY DESIGN SECTION

STORMWATER QUALITY PROTECTION & EROSION/SEDIMENT CONTROL DETAILS

LOCATION PRESCOTT VALLEY PIPELINE & CENTRAL CORE MULTI-USE PATHS (PIPELINE PHASE 3)

Registered Professional Engineer (Civil) CERTIFICATE NO. 20578 RICHARD E. ALDRIDGE Date Signed 9/12/14 ARIZONA, U.S.A.
EXPIRES 3-31-17

DWG NO. E-1.02

TRACS NO. SL680 01C | TEA-PRV-0(205)A | ____ OF ____

DATE- LOCATION- REVISIONS- FINISHED PLANS- SURVEY NO.

F.H.W.A. REGION	STATE	PROJECT NO.	SHEET NO.	TOTAL SHEETS	AS BUILT
9	ARIZ.	TEA-PRV-0(205)A			

PRV 0000 YV

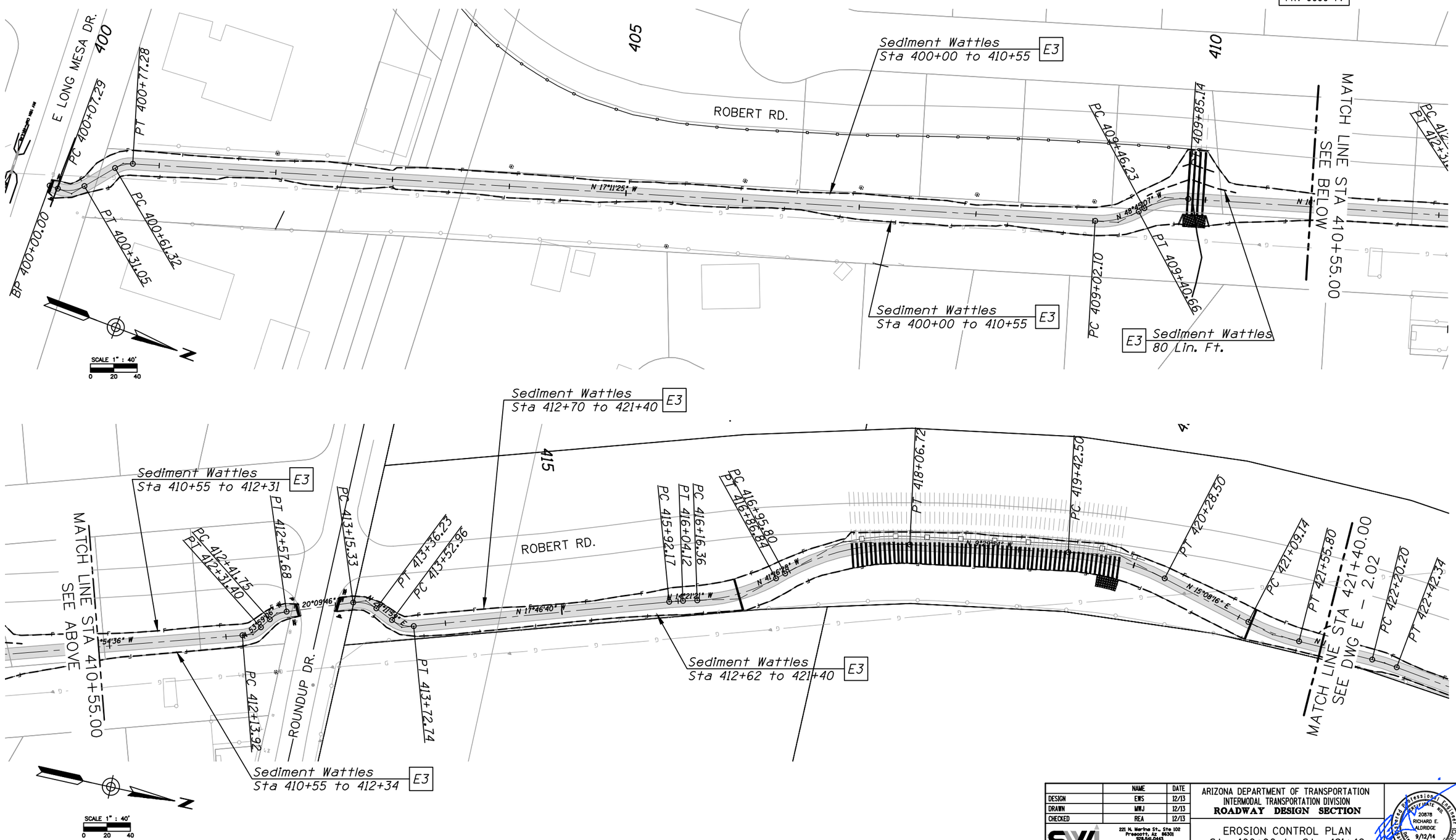

	NAME	DATE
DESIGN	EWS	12/13
DRAWN	MWJ	12/13
CHECKED	REA	12/13

SVA
221 N. Marina St., Ste 102
Prescott, AZ 86301
928.541.0443
928.541.1075 fax
www.swiaz.com

ARIZONA DEPARTMENT OF TRANSPORTATION
INTERMODAL TRANSPORTATION DIVISION
ROADWAY DESIGN SECTION

EROSION CONTROL PLAN
Sta 400+00 to Sta 421+40

LOCATION PRESCOTT VALLEY PIPELINE & CENTRAL CORE MULTI-USE PATHS (PIPELINE PHASE 3)

Registered Professional Engineer
CERTIFICATE NO. 20878
RICHARD E. ALDRIDGE
9/12/14
Date Signed
ARIZONA, U.S.A.
EXPIRES 3-31-17

DWG NO. E3-2.01

TRACS NO. SL680 01C

TEA-PRV-0(205)A

____ OF ____

Sep 12, 2014-1:32pm

P:\2012\12050 prescott valley pipeline multi-use path\Drawings\Construction Plans\Erosion Control.dwg SWI-C3D-12

F.H.W.A. REGION	STATE	PROJECT NO.	SHEET NO.	TOTAL SHEETS	AS BUILT
9	ARIZ.	TEA-PRV-0(205)A			

PRV 0000 YV

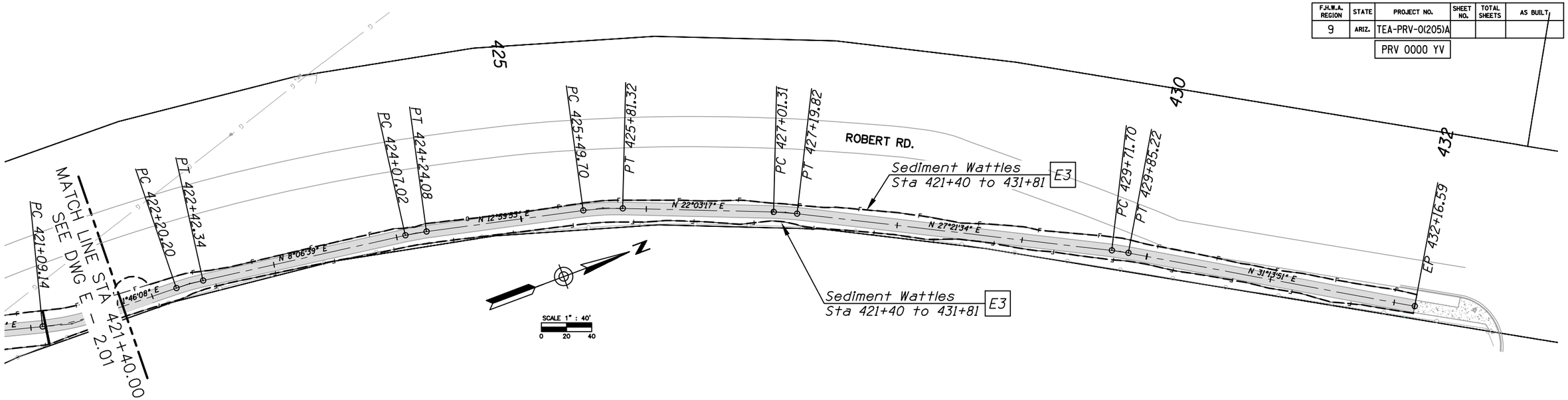

	NAME	DATE
DESIGN	EWS	12/13
DRAWN	MWJ	12/13
CHECKED	REA	12/13

SVM
221 N. Marina St., Ste 102
Prescott, AZ 86301
928.541.0443
928.541.1075 fax
www.svmaz.com

ARIZONA DEPARTMENT OF TRANSPORTATION
INTERMODAL TRANSPORTATION DIVISION
ROADWAY DESIGN SECTION

EROSION CONTROL PLAN
Sta 421+40 to Sta 431+82
Sta 500+00 to Sta 513+05__

Registered Professional Engineer (Civil)
CERTIFICATE NO. 20878
RICHARD E. ALDRIDGE
9/12/14
Signed
ARIZONA, U.S.A.
EXPIRES 3-31-17

LOCATION PRESCOTT VALLEY PIPELINE & CENTRAL CORE MULTI-USE PATHS (PIPELINE PHASE 3)

DWG NO. E3-2.02

TRACS NO. SL680 01C

TEA-PRV-0(205)A

____ OF ____

SURVEY NO. | FINISHED PLANS- | REVISIONS- | LOCATION- | DATE-

SURVEY NO. | FINISHED PLANS- | REVISIONS- | LOCATION- | DATE-

Sep 12, 2014-1:32pm P:\2012\12050 prescott valley pipeline multi-use path\Drawings\Construction Plans\Erosion Control.dwg SWI-C3D-12

F.H.W.A. REGION	STATE	PROJECT NO.	SHEET NO.	TOTAL SHEETS	AS BUILT
9	ARIZ.	TEA-PRV-0(205)T			
		PRV 0000 YV			

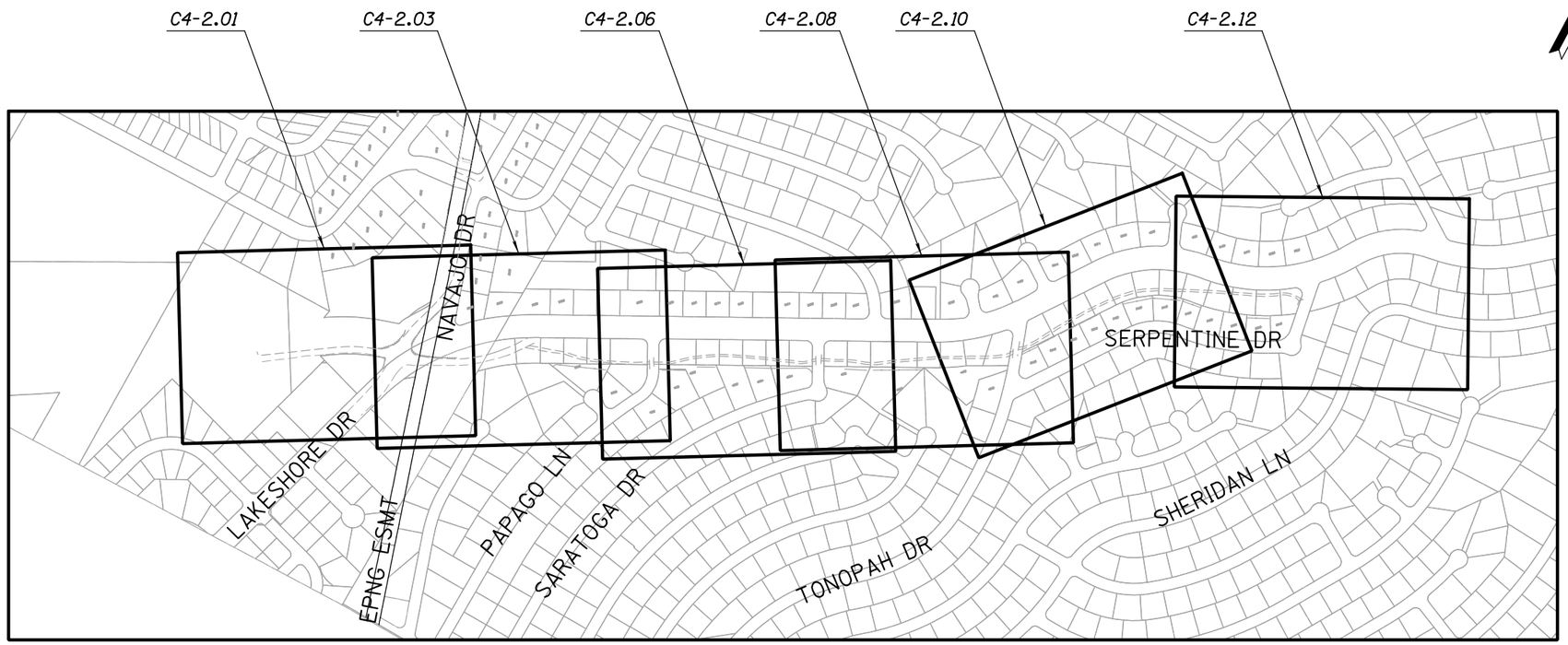

CENTRAL CORE PHASE 3

Legend:

- (XXX) *Geometric Control Point*
- (XXX) *Geometric Curve Reference*
- (X) *Pipe Symbol*
- (MH/X) *Manhole Symbol*
- (PE/X) *Pipe Extension Symbol*
- (X) *Barrier Symbol*
- [EX] *Erosion Control Reference*

	NAME	DATE
DESIGN	JKF	06/14
DRAWN	CPG	06/14
CHECKED	GPF	06/14

ARIZONA DEPARTMENT OF TRANSPORTATION
INTERMODAL TRANSPORTATION DIVISION
ROADWAY DESIGN SECTION

PARSONS BRINCKERHOFF

KEYMAP

ROUTE | LOCATION PRESCOTT VALLEY PIPELINE & CENTRAL CORE MULTI-USE PATHS (CENTRAL CORE PHASE 3)

Registered Professional Engineer (Civil) CERTIFICATE NO. 49430 GREGORY PATRICK FLY ARIZONA U.S.A. Expires 3/31/2015

DWG NO. G4-1.01

TRACS NO. SL680 01C | TEA-PRV-0(205)T | ____ OF ____

DATE- | LOCATION- | REVISIONS- | FINISHED PLANS- | SURVEY NO.

F.H.W.A. REGION	STATE	PROJECT NO.	SHEET NO.	TOTAL SHEETS	AS BUILT
9	ARIZ.	TEA-PRV-0(205)T			
		PRV 0000 YV			

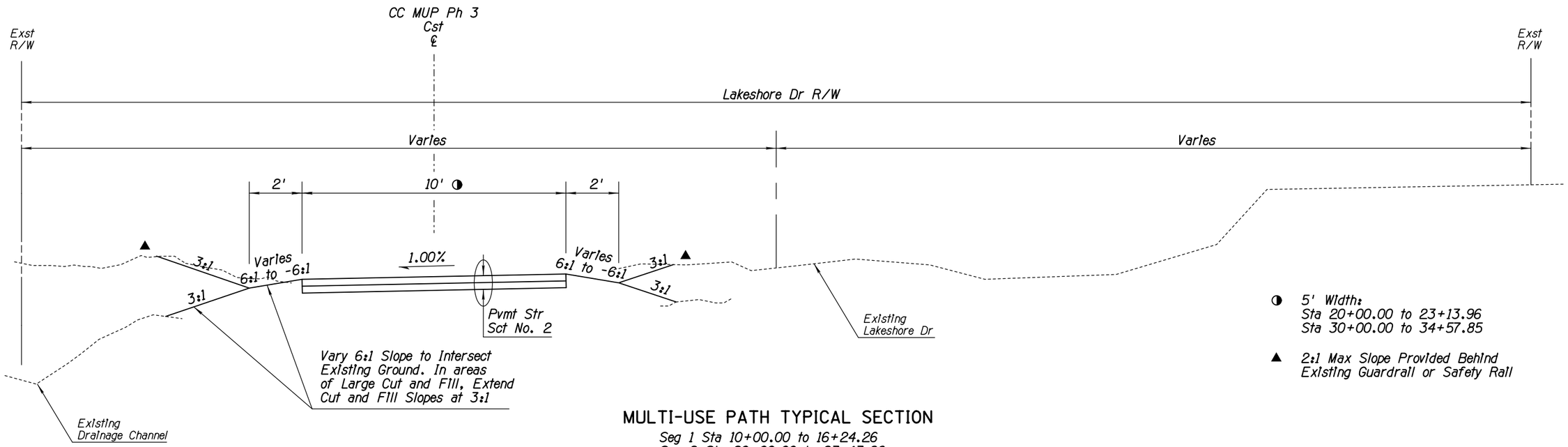

◑ 5' Width:
Sta 20+00.00 to 23+13.96
Sta 30+00.00 to 34+57.85

▲ 2:1 Max Slope Provided Behind Existing Guardrail or Safety Rail

MULTI-USE PATH TYPICAL SECTION

Seg 1 Sta 10+00.00 to 16+24.26
Seg 2 Sta 20+00.00 to 23+13.96
Seg 3 Sta 30+00.00 to 35+20.23

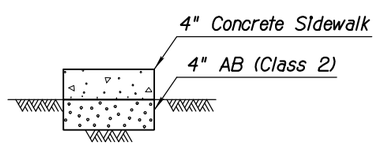

Total Thickness = 8"

PAVEMENT STRUCTURAL SECTION NO. 2

NOTE:

See Plan Sheets for Safety Rail Locations.

	NAME	DATE
DESIGN	JKF	06/14
DRAWN	CPG	06/14
CHECKED	GPF	06/14

PARSONS BRINCKERHOFF

ARIZONA DEPARTMENT OF TRANSPORTATION
INTERMODAL TRANSPORTATION DIVISION
ROADWAY DESIGN SECTION

TYPICAL SECTIONS

Registered Professional Engineer (Civil) CERTIFICATE NO. 49430 GREGORY PATRICK FLY ARIZONA U.S.A.
Expires 3/31/2015

ROUTE | LOCATION PRESCOTT VALLEY PIPELINE & CENTRAL CORE MULTI-USE PATHS (CENTRAL CORE PHASE 3)

DWG NO. G4-2.01

TRACS NO. SL680 01C | TEA-PRV-0(205)T | ____ OF ____

9/12/2014 T:\Prescott_MUP\SL694_ph3\Data\SL694-ts01.dgn

DATE- | LOCATION- | REVISIONS- | FINISHED PLANS- | SURVEY NO. | DATE- | LOCATION- | REVISIONS- | FINISHED PLANS- | SURVEY NO.

F.H.W.A. REGION	STATE	PROJECT NO.	SHEET NO.	TOTAL SHEETS	AS BUILT
9	ARIZ.	TEA-PRV-0(205)T			
		PRV 0000 YV			

MUP Grading - Lt Edge			
Roadway ℄	Beg Sta	End Sta	End Condition
MUP Ph 3, Seg 1	10+00.00	16+24.26	Fill
MUP Ph 3, Seg 2	20+00.00	20+35.00	Fill
MUP Ph 3, Seg 2	20+35.00	20+80.00	2' Grading
MUP Ph 3, Seg 2	20+80.00	23+13.96	Fill
MUP Ph 3, Seg 3	30+00.00	31+85.00	Fill
MUP Ph 3, Seg 3	31+85.00	32+60.00	2' Grading
MUP Ph 3, Seg 3	32+60.00	35+20.23	Fill

MUP Grading - Rt Edge			
Roadway ℄	Beg Sta	End Sta	End Condition
MUP Ph 3, Seg 1	10+00.00	16+24.26	2' Grading
MUP Ph 3, Seg 2	20+00.00	20+90.00	Cut
MUP Ph 3, Seg 2	20+90.00	22+10.00	2' Grading
MUP Ph 3, Seg 2	22+10.00	23+13.96	Cut
MUP Ph 3, Seg 3	30+00.00	30+60.00	Cut
MUP Ph 3, Seg 3	30+65.00	31+45.00	2' Grading
MUP Ph 3, Seg 3	31+45.00	33+90.00	Cut
MUP Ph 3. Seg 3	33+90.00	35+10.00	2' Grading
MUP Ph 3, Seg 3	35+10.00	35+20.23	Cut

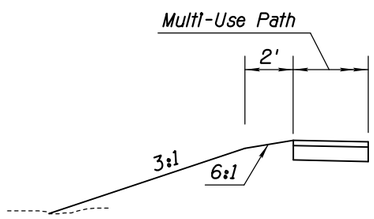

FILL CONDITION

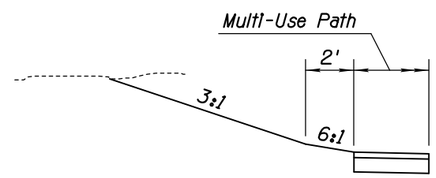

CUT CONDITION

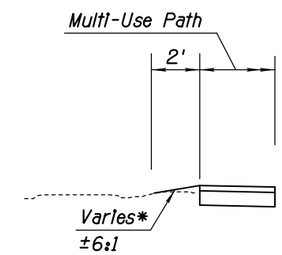

2' GRADING CONDITION

* Grade to Existing Ground for 2' from the Edge of Pavement (6:1 Max)

NOTES:

1. See Typical Sections on DWG NO. G2-2.01.
2. The Grading Tables Indicate Path Locations Containing No Safety Rail or Retaining Walls.

	NAME	DATE
DESIGN	JKF	06/14
DRAWN	CPG	06/14
CHECKED	GPF	06/14

PARSONS BRINCKERHOFF

ARIZONA DEPARTMENT OF TRANSPORTATION
INTERMODAL TRANSPORTATION DIVISION
ROADWAY DESIGN SECTION

TYPICAL SECTION

ROUTE | LOCATION: PRESCOTT VALLEY PIPELINE & CENTRAL CORE MULTI-USE PATHS (CENTRAL CORE PHASE 3)

Registered Professional Engineer (Civil) CERTIFICATE NO. 49430 GREGORY PATRICK FLY ARIZONA U.S.A. Expires 3/31/2015

DWG NO. G4-2.02

TRACS NO. SL680 01C | TEA-PRV-0(205)T | ___ OF ___

DATE- LOCATION- REVISIONS- FINISHED PLANS- SURVEY NO.

9/12/2014 T:\Prescott_MUP\SL694_ph3\Data\SL694_ts02.dgn

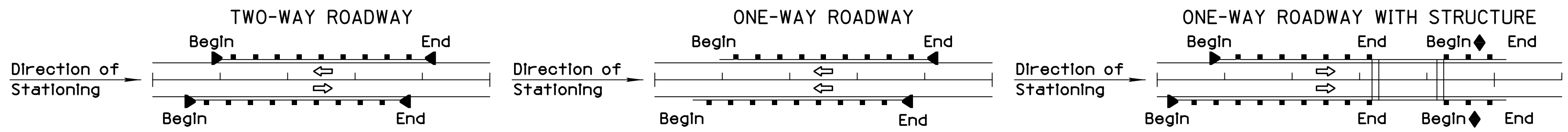

F.H.W.A. REGION	STATE	PROJECT NO.	SHEET NO.	TOTAL SHEETS	AS BUILT
9	ARIZ.	TEA-PRV-0(205)T			

PRV 0000 YV

LOCATION	◇					BARRIER – NEW GUARDRAIL				EXISTING GR						CONCRETE BARRIER												CABLE			TRANSITION – RAIL (Each)			TRANSITION – CONCRETE BARRIER (Each)							END TREATMENT – Action					END TREATMENT – Each ◪							REMARKS
Beginning Station (Approximate) (0)	Plan Reference Number ◇	Type "A" C-10.01, Type "B" C-10.02	C-10.03 (Timber)	C-10.04 (Steel)	Detail	Length (Linear Feet) (0.0) ◇	C-10.06 Nested W-Beam ▲ Length (Linear Feet) (0.0)	C-10.07 Bolted Anchor (Each)	Shop Curved Guardrail Length (Linear Feet) (0.0)	Reconstruct-Exst Post, Block	Reconstruct-New Post, Block	Remove Rub Rail	Construct from Salvage	Remove	Length (Linear Feet) (0.0)	Remove Existing Length (Linear Feet) (0.0)	C-10.40 (32" Median)	C-10.41 (42" Median)	C-10.50 (32" Half)	C-10.51 (32" Half w/ Sidewalk)	C-10.52 (32" Half w/ Gutter) △	C-10.53 (42" Half w/ Gutter) △	C-10.54 (32" Half at Piers)	C-10.55 (42" Half at Piers)	Bridge Barrier ◐	Detail	Length (Linear Feet) (0.0)	High-Tension Cable Barrier ● Length (Linear Feet) (0)	C-12.30 Chain-Link Cable Length (Linear Feet) (0.0)	Begin = Treatment at Beginning End = Treatment at End	C-10.30 Thrie Beam	Bridge Thrie Beam ◐	Reconstruct Rub Rail	C-10.70 32" or C-10.72 42"	C-10.71 32" or C-10.73 42" △	C-10.74 42" to 32"	C-10.75 32" to C&G ◈	C-10.76 32" on Radius	Bridge Barrier ◐	Detail	New	Reconstruct (See Special Prv)	Remove and Salvage	Construct from Salvage	Remove	Tangent ET Plus or SKT-350 ◧	Flared SRT-350 or FLEAT-350 ◧	End Anchor C-10.08 or Detail	High-Tension Cable Terminal	Sand Barrels C-1 or Detail ■	Attenuator Detail	BCT (L=12.5')	
CC MUP Seg 3 N=1311392.95 E=582027.25	1	A	X			25.0								X	25.0															Begin																							Remove and Replace Guardrail to New Coordinates. Connect to Existing Guardrail. A Guardrail Shop Curve will be required. Payment will be included in the cost of Guardrail
																														End																							
																														Begin																							
																														End																							
CC MUP Seg 3 N=1311355.69 E=582031.50	2	A	X			37.5								X	37.5															Begin																							Remove and Replace Guardrail to New Coordinates. Connect to Guard-rail Shop Curve. Install End Anchor.
																														End											X							1					
CC MUP Seg 3 N=1311343.83 E=582018.40	3	A	X			12.5								X	12.5															Begin																							Install End Anchor. New End Anchor is located Outside of 12' Clr Zone for 25MPH for SB Traffic
																														End											X							1					
																														Begin																							
																														End																							
																														Begin																							
																														End																							
																														Begin																							
																														End																							
																														Begin																							
																														End																							
																														Begin																							
																														End																							
																														Begin																							
																														End																							
																														Begin																							
																														End																							
																														Begin																							
																														End																							
																														Begin																							
																														End																							
Sheet Total						75.0									75.0																																	2					

THE ZEROS IN PARENTHESES (0.0) INDICATE THE DIMENSIONAL PRECISION FOR THAT COLUMN

▲ THE LENGTH OF NESTED W-BEAM IS FOR TYPES 2 OR 3 (37.5'). DETERMINATION OF TYPE (1, 2 or 3) TO USE IS MADE IN THE FIELD. THE PAY QUANTITY IS THE ACTUAL LENGTH INSTALLED (25.0' or 37.5').

△ SPECIFY GUTTER WIDTH UNDER "REMARKS"

◆ BEGIN STATION AFTER BRIDGE TRANSITION

◒ SEE BRIDGE SHEETS FOR DETAILS AND QUANTITIES

● LENGTH IS FROM LENGTH OF NEED (LON) POINT TO LON POINT. ACTUAL SEGMENT LENGTH VARIES DEPENDING ON TERMINAL TYPE. SEE SPECIAL PROVISIONS.

◇ SHOP CURVE GUARD RAIL IS REQUIRED. PAYMENT HAS BEEN INCLUDED UNDER ITEM NO. 9050001 - GUARD RAIL, W-BEAM, SINGLE FACE

◈ SPECIFY TYPE 1 OR 2 UNDER 'REMARKS'

◪ ALLOWABLE END TREATMENT OPTIONS ARE INDICATED WITH THE NUMBER '1' IN THE SPACE. BLANK SPACES ARE NOT VIABLE ALTERNATIVES.

■ ARRAY TYPE AND ANGLE IS NOTED UNDER 'REMARKS'

◧ NOTE: FOR AS-BUILT PREPARATION - CIRCLE END TREATMENT INSTALLED

	NAME	DATE
DESIGN	JKF	06/14
DRAWN	CPG	06/14
CHECKED	GPF	06/14

PARSONS BRINCKERHOFF

ARIZONA DEPARTMENT OF TRANSPORTATION
INTERMODAL TRANSPORTATION DIVISION
ROADWAY DESIGN SECTION

BARRIER SUMMARY SHEET

ROUTE

LOCATION PRESCOTT VALLEY PIPELINE & CENTRAL CORE MULTI-USE PATHS (CENTRAL CORE PHASE 3)

Registered Professional Engineer (Civil) Certificate No. 49430 GREGORY PATRICK FLY, ARIZONA U.S.A. Date Signed / Expires 3/31/2015

PRELIMINARY

DWG NO. G4-3.01

TRACS NO. SL680 01C

TEA-PRV-0(205)T

____ OF ____

REV. DATE: 01/16/2009

DATE- LOCATION- REVISIONS- FINISHED PLANS- SURVEY NO.

9/12/2014

T:\Prescott_MUP\SL694_ph3\Data\SL694bs01.dgn

F.H.W.A. REGION	STATE	PROJECT NO.	SHEET NO.	TOTAL SHEETS	AS BUILT
9	ARIZ.	TEA-PRV-0(205)T			
		PRV 0000 YV			

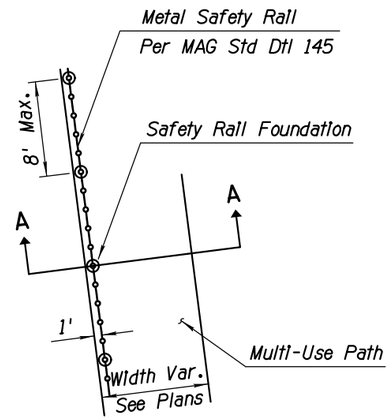

TYPICAL SAFETY RAIL LOCATION
PLAN VIEW
N.T.S.

SAFETY RAIL LOCATIONS					
Centerline	Begin Sta	End Sta	Offset	Length	Size*
Seg 1	14+80	15+80	4' Lt	96 LF	56"
Seg 3	30+30	32+40	1.5' Lt	207 LF	56"

* See Sheets 2 and 3 of 3

NOTES:

1. Paint Rail per ADOT Standard Specifications, Color Dunn Edwards "Hope Chest Brown" or approved equal.
2. See MAG Detail 145 for Additional Information
3. The Cost of the Safety Rail Concrete Foundation is Included In ITEM 6110201 METAL HANDRAIL (42") and ITEM 6110202 METAL HANDRAIL (56").
4. See Sheets 2 of 3 and 3 of 3 for more Information on the Safety Rail.
5. See MAG Detail 145 Type 4 for Foundation Information

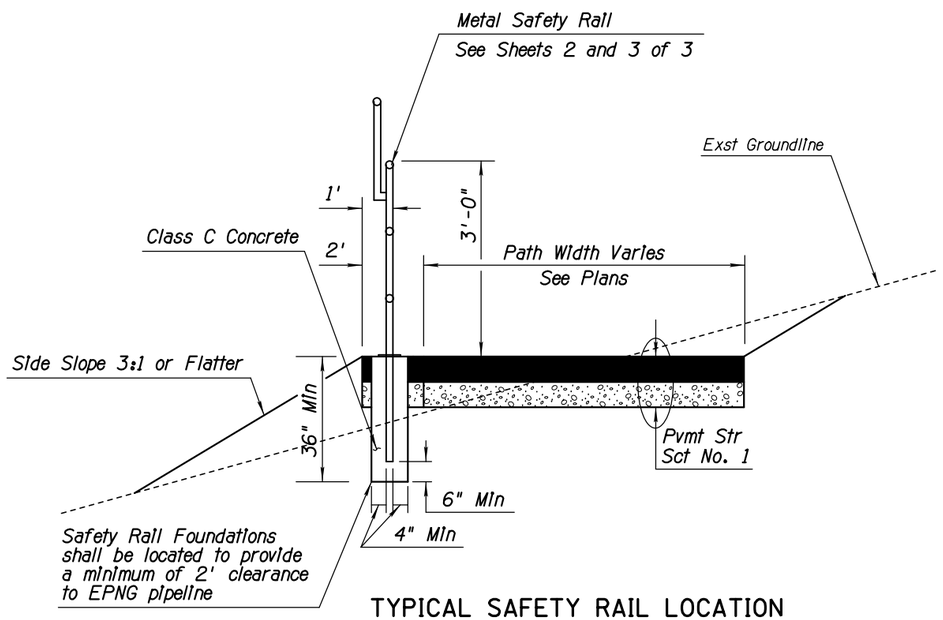

TYPICAL SAFETY RAIL LOCATION
SECTION A-A
N.T.S.

DETAIL T

SAFETY RAIL

SHEET 1 OF 3

	NAME	DATE
DESIGN	JKF	06/14
DRAWN	CPG	06/14
CHECKED	GPF	06/14

PARSONS BRINCKERHOFF

ARIZONA DEPARTMENT OF TRANSPORTATION
INTERMODAL TRANSPORTATION DIVISION
ROADWAY DESIGN SECTION

DETAIL SHEET
DETAIL T

Registered Professional Engineer (Civil) CERTIFICATE NO. 49430 GREGORY PATRICK FLY ARIZONA U.S.A.
Expires 3/31/2015

ROUTE | LOCATION PRESCOTT VALLEY PIPELINE & CENTRAL CORE MULTI-USE PATHS (CENTRAL CORE PHASE 3)

DWG NO. G4-4.01

TRACS NO. SL680 01C | TEA-PRV-0(205)T | ____ OF ____

DATE- | LOCATION- | REVISIONS- | FINISHED PLANS- | SURVEY NO.

9/12/2014 T:\Prescott_MUP\SL694_ph3\Data\SL694-dtc.dgn

F.H.W.A. REGION	STATE	PROJECT NO.	SHEET NO.	TOTAL SHEETS	AS BUILT
9	ARIZ.	TEA-PRV-0(205)T			
		PRV 0000 YV			

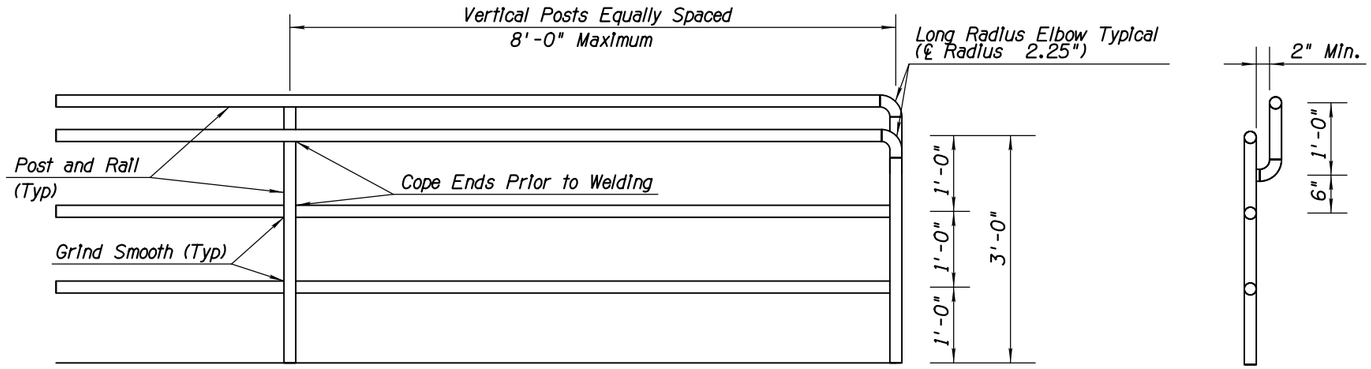

FRONT VIEW

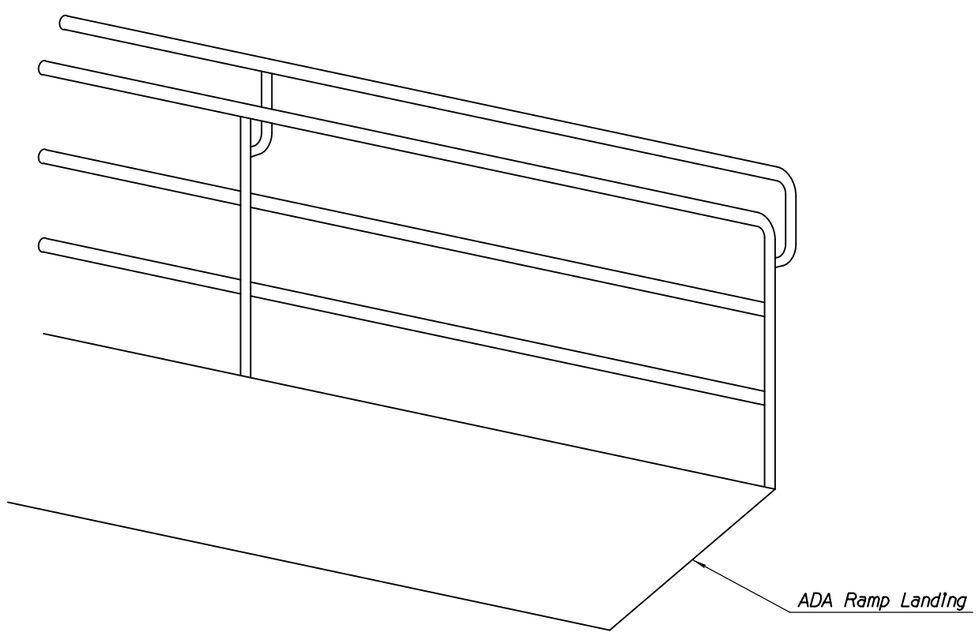

PERSPECTIVE VIEW

NOTES:

1. Posts and Rails shall be 1.5" Schedule 40 Steel Pipe ASTM A 53. Grade B (2.72 #/LF, 1.9" O.D.).
2. Paint Rail per ADOT Specifications
3. Vertical Posts to be evenly spaced.
4. Remove all sharp edges.
5. For Foundation Information use MAG Std Det 145 Type 4.
6. See MAG Standard Detail 145 for additional Information not shown.
7. Ramp handrails shall extend horizontally above the landing for 1 ft. beyond the top and bottom of ramp runs. Extensions shall return to the landing surface or shall be continuous to the handrail of an adjacent ramp run.

DETAIL T

42" SAFETY RAIL

SHEET 2 OF 3

	NAME	DATE
DESIGN	JKF	06/14
DRAWN	CPG	06/14
CHECKED	GPF	06/14

PARSONS BRINCKERHOFF

ARIZONA DEPARTMENT OF TRANSPORTATION
INTERMODAL TRANSPORTATION DIVISION
ROADWAY DESIGN SECTION

DETAIL SHEET
DETAIL T

ROUTE | LOCATION PRESCOTT VALLEY PIPELINE & CENTRAL CORE MULTI-USE PATHS (CENTRAL CORE PHASE 3)

Registered Professional Engineer (Civil) CERTIFICATE NO. 49450 GREGORY PATRICK FLY ARIZONA U.S.A. Expires 3/31/2015

DWG NO. G4-4.02

TRACS NO. SL680 01C | TEA-PRV-0(205)T | ____ OF ____

DATE- | LOCATION- | REVISIONS- | FINISHED PLANS- | SURVEY NO.

9/12/2014 T:\Prescott_MUP\SL694_ph3\Data\SL694_dtc02.dgn

F.H.W.A. REGION	STATE	PROJECT NO.	SHEET NO.	TOTAL SHEETS	AS BUILT
9	ARIZ.	TEA-PRV-0(205)T			
		PRV 0000 YV			

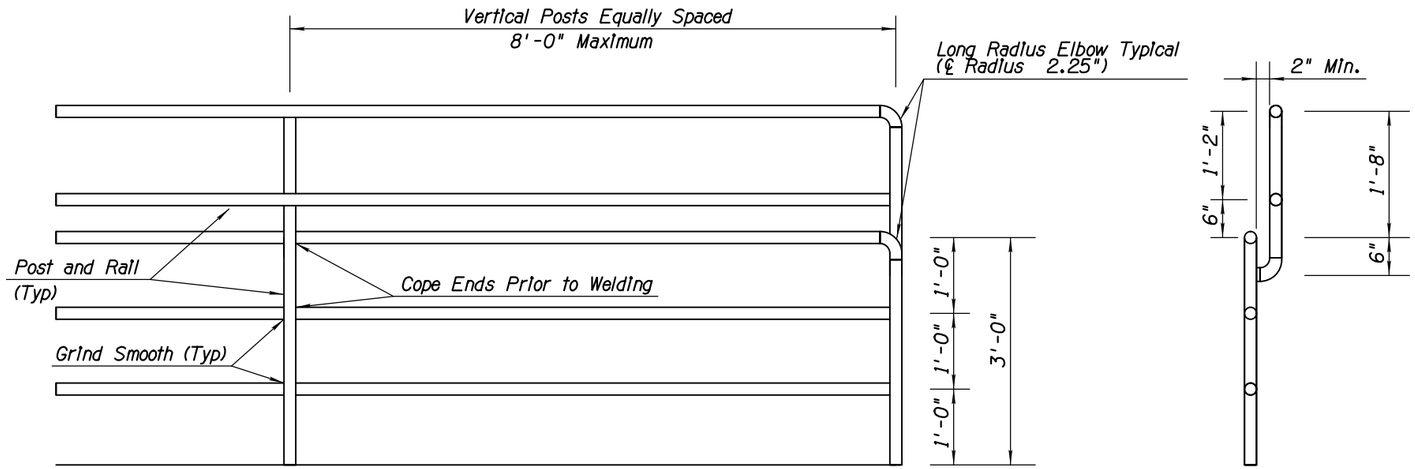

FRONT VIEW

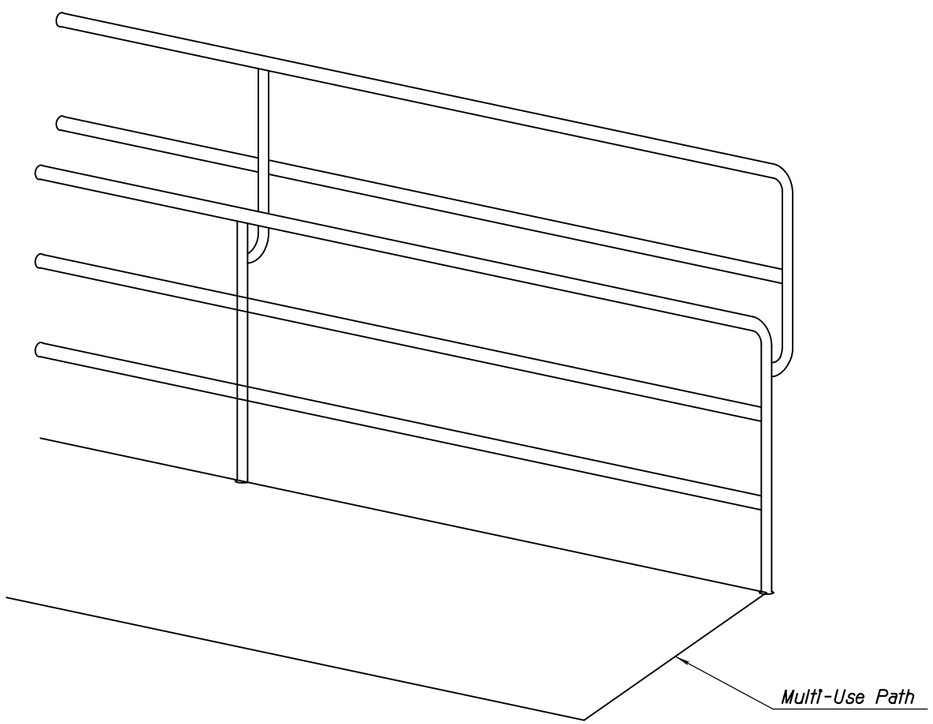

PERSPECTIVE VIEW

NOTES:

1. Posts and Rails shall be 1.5" Schedule 40 Steel Pipe ASTM A 53. Grade B (2.72 #/LF, 1.9" O.D.).
2. Paint Rail per ADOT Specifications
3. Vertical Posts to be evenly spaced.
4. Remove all sharp edges.
5. For Foundation Information use MAG Std Det 145 Type 4.
6. See MAG Standard Detail 145 for additional Information not shown.
7. Ramp handrails shall extend horizontally above the landing for 1 ft. beyond the top and bottom of ramp runs. Extensions shall return to the landing surface or shall be continuous to the handrail of an adjacent ramp run.

DETAIL T

56" SAFETY RAIL

SHEET 3 OF 3

	NAME	DATE
DESIGN	JKF	06/14
DRAWN	CPG	06/14
CHECKED	GPF	06/14

PARSONS BRINCKERHOFF

ARIZONA DEPARTMENT OF TRANSPORTATION
INTERMODAL TRANSPORTATION DIVISION
ROADWAY DESIGN SECTION

DETAIL SHEET
DETAIL T

Registered Professional Engineer (Civil) CERTIFICATE NO. 49450 GREGORY PATRICK FLY ARIZONA U.S.A.
Expires 3/31/2015

ROUTE | LOCATION PRESCOTT VALLEY PIPELINE & CENTRAL CORE MULTI-USE PATHS (CENTRAL CORE PHASE 3)

DWG NO. G4-4.03

TRACS NO. SL680 01C | TEA-PRV-0(205)T | ____ OF ____

DATE- | LOCATION- | REVISIONS- | FINISHED PLANS- | SURVEY NO.

F.H.W.A. REGION	STATE	PROJECT NO.	SHEET NO.	TOTAL SHEETS	AS BUILT
9	ARIZ.	TEA-PRV-0(205)T			
		PRV 0000 YV			

NOTES:

1. Elevations in () indicate existing elevations. Contractor shall verify elevations prior to construction.

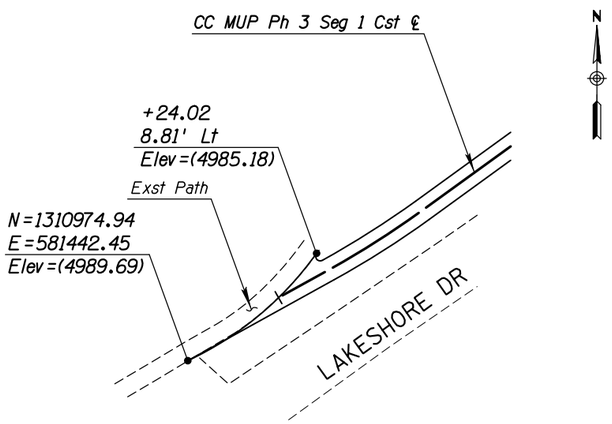

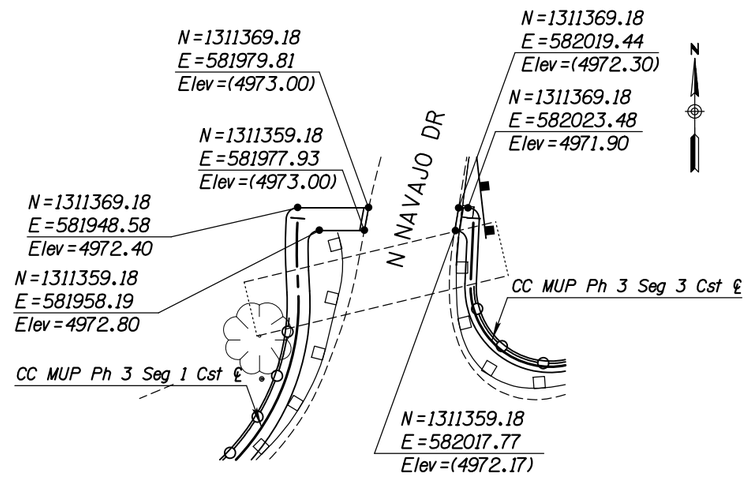

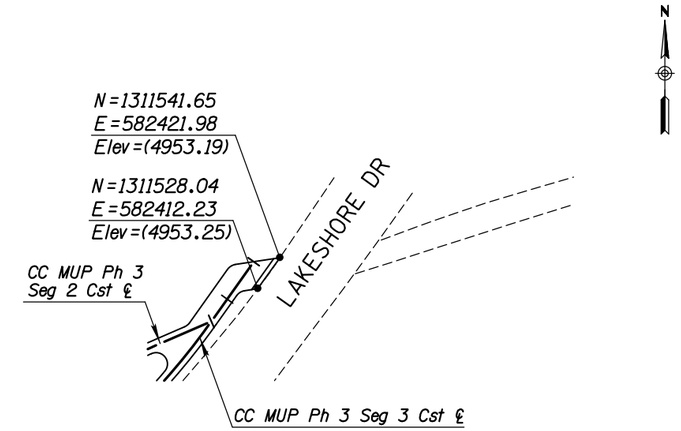

DETAIL U

PAVEMENT TIE-INS

	NAME	DATE
DESIGN	JKF	06/14
DRAWN	CPG	06/14
CHECKED	GPF	06/14

PARSONS BRINCKERHOFF

ARIZONA DEPARTMENT OF TRANSPORTATION
INTERMODAL TRANSPORTATION DIVISION
ROADWAY DESIGN SECTION

DETAIL SHEET
DETAIL U

ROUTE | LOCATION: PRESCOTT VALLEY PIPELINE & CENTRAL CORE MULTI-USE PATHS (CENTRAL CORE PHASE 3)

Registered Professional Engineer (Civil) CERTIFICATE NO. 49430 GREGORY PATRICK FLY ARIZONA U.S.A. Expires 3/31/2015

DWG NO. G4-4.04

TRACS NO. SL680 01C | TEA-PRV-0(205)T | ___ OF ___

DATE- | LOCATION- | REVISIONS- | FINISHED PLANS- | SURVEY NO.

F.H.W.A. REGION	STATE	PROJECT NO.	SHEET NO.	TOTAL SHEETS	AS BUILT
9	ARIZ.	TEA-PRV-0(205)T			
		PRV 0000 YV			

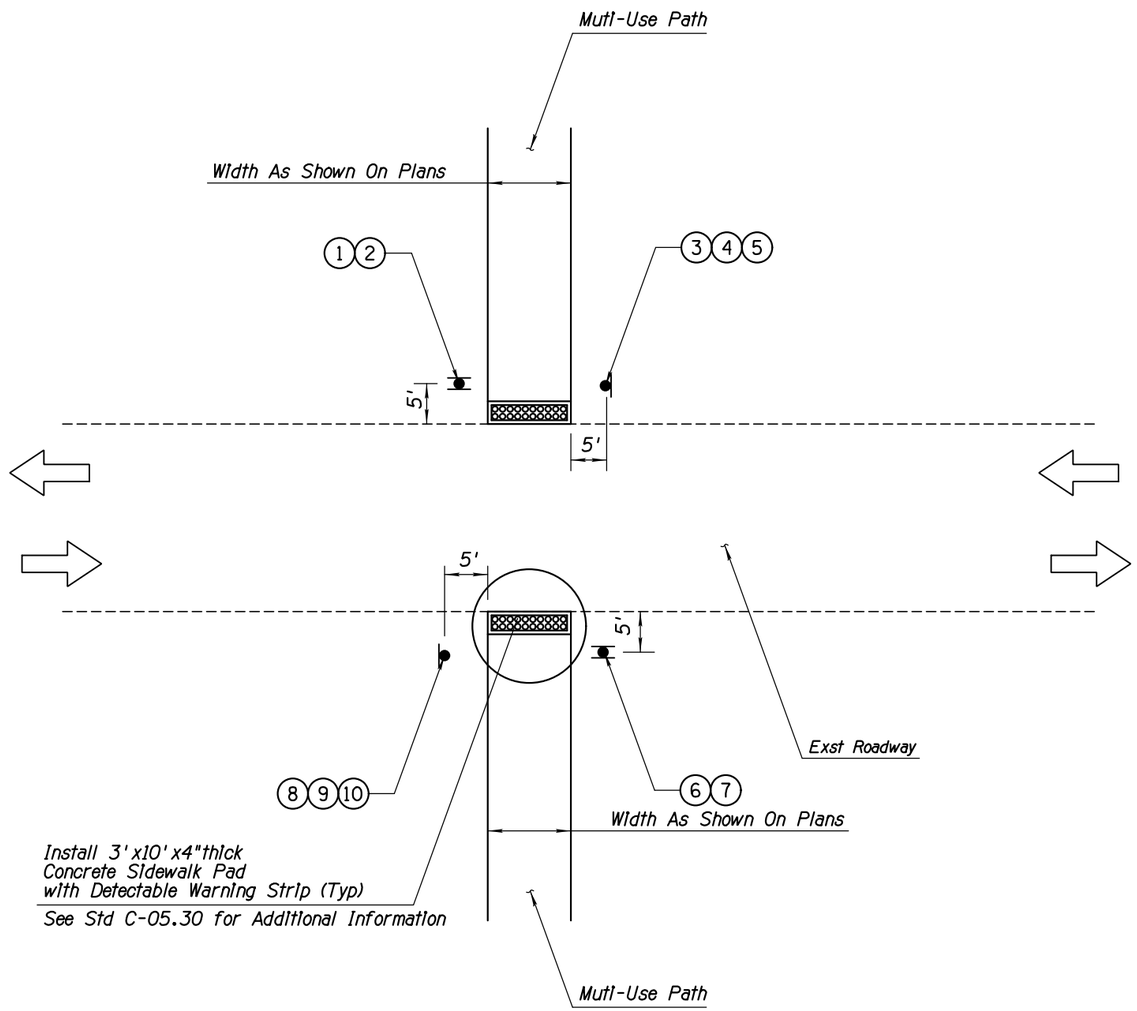

TYPICAL PATH CROSSING
PLAN VIEW
N.T.S.

NOTES:

1. See the Sign Summary Sheet for Additional Information.
2. The Configuration Shown Represents a Typical Application Where the Path Crosses an Existing Street, Utilizing MUTCD Figure 9B-7. Field Modifications Permitted as Approved by the Engineer.
3. See Plan Sheets for Locations

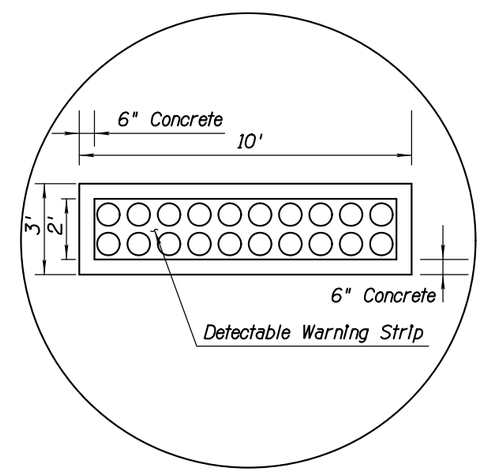

LEGEND:

(X) - Sign Number (See Sign Summary Sheets)

- - - - - Existing Pavement

——— New Path

DETAIL V

TYPICAL PATH CROSSING AT STREETS

	NAME	DATE
DESIGN	JKF	06/14
DRAWN	CPG	06/14
CHECKED	GPF	06/14

PARSONS BRINCKERHOFF

ARIZONA DEPARTMENT OF TRANSPORTATION
INTERMODAL TRANSPORTATION DIVISION
ROADWAY DESIGN SECTION

DETAIL SHEET
DETAIL V

ROUTE | LOCATION PRESCOTT VALLEY PIPELINE & CENTRAL CORE MULTI-USE PATHS (CENTRAL CORE PHASE 3)

Registered Professional Engineer (Civil) CERTIFICATE NO. 49430 GREGORY PATRICK FLY ARIZONA U.S.A. Expires 3/31/2015

DWG NO. G4-4.05

TRACS NO. SL680 01C | TEA-PRV-0(205)T | ____ OF ____

9/12/2014 T:\Prescott_MUP\SL694_ph3\Data\SL694_dte.dgn

DATE- LOCATION- REVISIONS- FINISHED PLANS- SURVEY NO.

F.H.W.A. REGION	STATE	PROJECT NO.	SHEET NO.	TOTAL SHEETS	AS BUILT
9	ARIZ.	TEA-PRV-0(204)T			
		PRV 0000 YV			

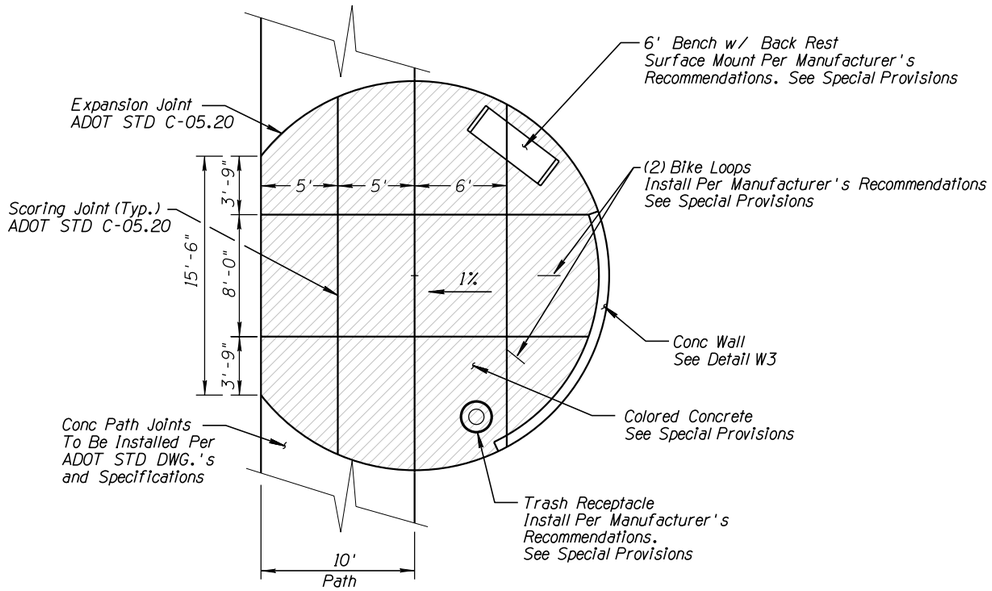

Notes to Contractor:
1. See Special Provisions for Equipment Manufacturers, Model Numbers, and Colors
2. Contractor to Provide all Hardware Necessary for a Complete Installation

DETAIL W1 (NTS)
REST STOP

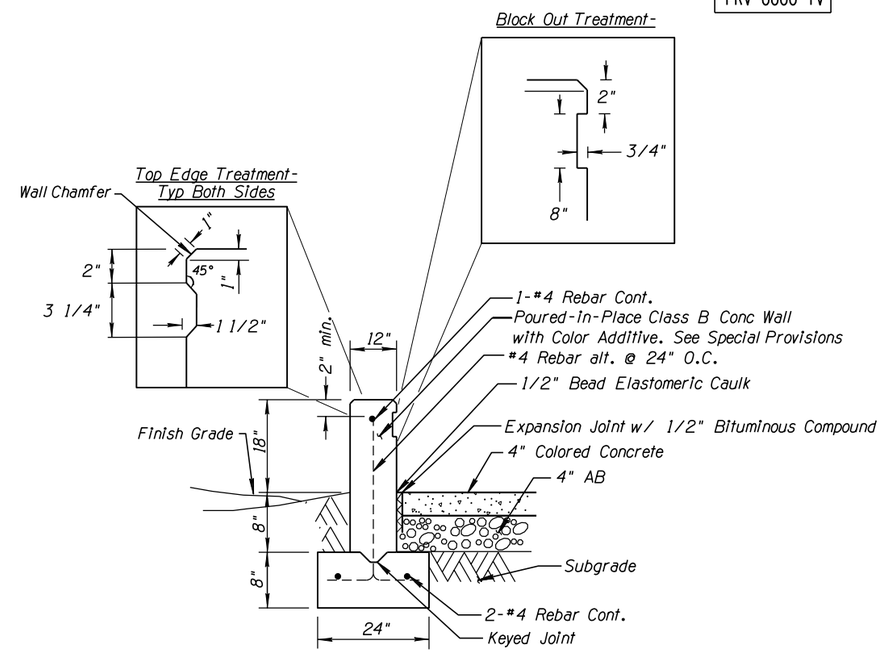

Note: Step foundation as required

DETAIL W3 (NTS)
WALL

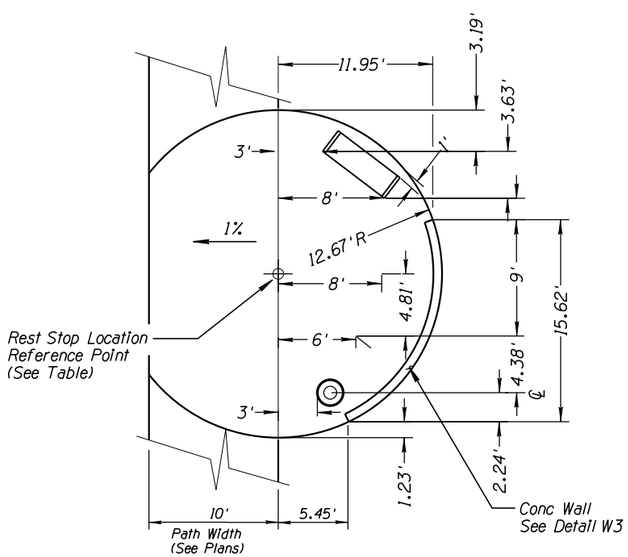

DETAIL W2 (NTS)
REST STOP– LAYOUT OF AMENITIES

REST STOP – AMENITIES

REST STOP – BLOCK OUT INLAY

Call at least two full working days before you begin excavation. ARIZONA 811 Arizona Blue Stake, Inc. Dial 8-1-1 or 1-800-STAKE-IT (782-5348) In Maricopa County: (602) 263-1100

	NAME	DATE
DESIGN	ECC	8/14
DRAWN	CEC	8/14
CHECKED	ECC	8/14

corral design group, inc. CDG

ARIZONA DEPARTMENT OF TRANSPORTATION
INTERMODAL TRANSPORTATION DIVISION
ROADSIDE DEVELOPMENT SERVICES

DETAIL SHEET
DETAILS W1, W2 & W3

Registered professional engineer (civil) CERTIFICATE NO. 28447 EDWARD C. CORRAL Date Signed 08/27/14 ARIZONA, U.S.A. EXPIRES 12/31/2015

ROUTE | LOCATION PRESCOTT VALLEY PIPELINE & CENTRAL CORE MULTI-USE PATHS (CENTRAL CORE PHASE 3) | DWG NO. G4-4.06

TRACS NO. SL680 01C | TEA-PRV-0(205)T | ___ OF ___

NO. | DESCRIPTION OF REVISION | DATE | MADE BY | NO. | DESCRIPTION OF REVISION | DATE | MADE BY

F.H.W.A. REGION	STATE	PROJECT NO.	SHEET NO.	TOTAL SHEETS	AS BUILT
9	ARIZ.	TEA-PRV-0(205)T			
		PRV 0000 YV			

All Coordinates Are Ground Coordinates And All Bearings Are Grid Bearings

G.A.F. = 1.00032

PLAN REF NO.	LOCATION	P.I./P.O.T. STATION	COORDINATES										
100	CC MUP Ph 3 Seg 1 Cst ℄ POB	10+00.00	N=1311002.73	E=581482.36									
101	CC MUP Ph 3 Seg 1 Cst ℄ PC	10+25.27	N=1311014.96	E=581504.47									
102	CC MUP Ph 3 Seg 1 Cst ℄ PI	10+49.74	N=1311026.81	E=581525.88	SIMPLE	Δ=7°00'03"	R=400.00'	T=24.47'	L=48.87'	Ext=0.75'	e=NC		
103	CC MUP Ph 3 Seg 1 Cst ℄ PT	10+74.15	N=1311041.17	E=581545.69									
104	CC MUP Ph 3 Seg 1 Cst ℄ PC	12+09.43	N=1311120.60	E=581655.20									
105	CC MUP Ph 3 Seg 1 Cst ℄ PI	13+02.44	N=1311175.21	E=581730.50	SIMPLE	Δ=15°08'15"	R=700.00'	T=93.01'	L=184.94'	Ext=6.15'	e=NC		
106	CC MUP Ph 3 Seg 1 Cst ℄ PT	13+94.37	N=1311208.27	E=581817.44									
107	CC MUP Ph 3 Seg 1 Cst ℄ PC	14+66.16	N=1311233.78	E=581884.54									
108	CC MUP Ph 3 Seg 1 Cst ℄ PI	15+38.91	N=1311259.63	E=581952.54	SIMPLE	Δ=72°04'18"	R=100.00'	T=72.75'	L=125.79'	Ext=23.66'	e=NC		
109	CC MUP Ph 3 Seg 1 Cst ℄ PT	15+91.95	N=1311332.29	E=581948.87									
110	CC MUP Ph 3 Seg 1 Cst ℄ PC	16+00.94	N=1311341.27	E=581948.42									
111	CC MUP Ph 3 Seg 1 Cst ℄ PI	16+12.61	N=1311352.93	E=581947.83	SIMPLE	Δ=6°40'55"	R=200.00'	T=11.68'	L=23.32'	Ext=0.34'	e=NC		
112	CC MUP Ph 3 Seg 1 Cst ℄ PT/POE	16+24.26	N=1311364.58	E=581948.61									
200	CC MUP Ph 3 Seg 2 Cst ℄ POB	20+00.00	N=1311352.01	E=582123.91									
201	CC MUP Ph 3 Seg 2 Cst ℄ PC	20+11.68	N=1311355.97	E=582134.89									
202	CC MUP Ph 3 Seg 2 Cst ℄ PI	20+30.85	N=1311362.48	E=582152.92	SIMPLE	Δ=14°33'47"	R=150.00'	T=19.17'	L=38.13'	Ext=1.22'	e=NC		
203	CC MUP Ph 3 Seg 2 Cst ℄ PT	20+49.81	N=1311373.31	E=582168.74									
204	CC MUP Ph 3 Seg 2 Cst ℄ PC	22+31.57	N=1311476.01	E=582318.71									
205	CC MUP Ph 3 Seg 2 Cst ℄ PI	22+60.58	N=1311492.40	E=582342.64	SIMPLE	Δ=11°02'47"	R=300.00'	T=29.01'	L=57.84'	Ext=1.40'	e=NC		
206	CC MUP Ph 3 Seg 2 Cst ℄ PT	22+89.41	N=1311503.90	E=582369.27									
207	CC MUP Ph 3 Seg 2 Cst ℄ POE	23+13.96	N=1311513.63	E=582391.81									
300	CC MUP Ph 3 Seg 3 Cst ℄ POB	30+00.00	N=1311364.58	E=582026.00									
301	CC MUP Ph 3 Seg 3 Cst ℄ PC	30+28.89	N=1311335.71	E=582024.73									
302	CC MUP Ph 3 Seg 3 Cst ℄ PI	30+80.33	N=1311284.32	E=582022.48	SIMPLE	Δ=111°32'10"	R=35.00'	T=51.44'	L=68.13'	Ext=27.22'	e=NC		
303	CC MUP Ph 3 Seg 3 Cst ℄ PT	30+97.02	N=1311301.10	E=582071.11									
304	CC MUP Ph 3 Seg 3 Cst ℄ PC	31+30.44	N=1311311.99	E=582102.70									
305	CC MUP Ph 3 Seg 3 Cst ℄ PI	31+71.94	N=1311325.53	E=582141.94	SIMPLE	Δ=9°29'23"	R=500.00'	T=41.50'	L=82.81'	Ext=1.72'	e=NC		
306	CC MUP Ph 3 Seg 3 Cst ℄ PT	32+13.26	N=1311345.34	E=582178.40									
307	CC MUP Ph 3 Seg 3 Cst ℄ PC	32+96.23	N=1311384.96	E=582251.30									
308	CC MUP Ph 3 Seg 3 Cst ℄ PI	33+38.97	N=1311405.37	E=582288.86	SIMPLE	Δ=16°13'09"	R=300.00'	T=42.75'	L=84.92'	Ext=3.03'	e=NC		
309	CC MUP Ph 3 Seg 3 Cst ℄ PT	33+81.15	N=1311435.46	E=582319.23									
310	CC MUP Ph 3 Seg 3 Cst ℄ PC	34+36.32	N=1311474.29	E=582358.42									
311	CC MUP Ph 3 Seg 3 Cst ℄ PI	34+62.22	N=1311492.52	E=582376.81	SIMPLE	Δ=9°52'06"	R=300.00'	T=25.90'	L=51.67'	Ext=1.12'	e=NC		
312	CC MUP Ph 3 Seg 3 Cst ℄ PT	34+87.99	N=1311513.63	E=582391.81									
313	CC MUP Ph 3 Seg 3 Cst ℄ POE	35+20.23	N=1311539.91	E=582410.48									

CENTERLINE CONTROL POINT AND CURVE DATA TABLE

All bearings and angles have been rounded to the nearest second.
Use the control points provided and their respective state plane coordinates to re-establish the centerline of each path.

	NAME	DATE
DESIGN	JKF	06/14
DRAWN	CPG	06/14
CHECKED	GPF	06/14

PARSONS BRINCKERHOFF

ARIZONA DEPARTMENT OF TRANSPORTATION
INTERMODAL TRANSPORTATION DIVISION
ROADWAY DESIGN SECTION

GEOMETRIC SUMMARY SHEET

Registered Professional Engineer (Civil) CERTIFICATE NO. 49430 GREGORY PATRICK FLY ARIZONA U.S.A. Expires 3/31/2015

ROUTE | LOCATION PRESCOTT VALLEY PIPELINE & CENTRAL CORE MULTI-USE PATHS (CENTRAL CORE PHASE 3)

DWG NO. C4-1.01

TRACS NO. SL680 01C | TEA-PRV-0(205)T | ___ OF ___

DATE- LOCATION- REVISIONS- FINISHED PLANS- SURVEY NO.

F.H.W.A. REGION	STATE	PROJECT NO.	SHEET NO.	TOTAL SHEETS	AS BUILT
9	ARIZ.	TEA-PRV-0(205)T			
		PRV 0000 YV			

All Coordinates Are Ground Coordinates And All Bearings Are Grid Bearings

G.A.F. = 1.00032

PLAN REF NO.	LOCATION	P.I./P.O.T. STATION	COORDINATES									
400	CC MUP Ph 3 Seg 4 Cst ℄ POB	40+00.00	N=1311542.00	E=582460.08								
401	CC MUP Ph 3 Seg 4 Cst ℄ PC	41+32.40	N=1311584.30	E=582585.54								
402	CC MUP Ph 3 Seg 4 Cst ℄ PI	41+50.62	N=1311590.12	E=582602.81	SIMPLE	Δ=6°57'08"	R=300.00'	T=18.22'	L=36.40'	Ext=0.55'	e=NC	
403	CC MUP Ph 3 Seg 4 Cst ℄ PT	41+68.80	N=1311593.81	E=582620.66								
404	CC MUP Ph 3 Seg 4 Cst ℄ PC	42+40.53	N=1311608.32	E=582690.90								
405	CC MUP Ph 3 Seg 4 Cst ℄ PI	42+58.39	N=1311611.94	E=582708.39	SIMPLE	Δ=10°12'27"	R=200.00'	T=17.86'	L=35.63'	Ext=0.80'	e=NC	
406	CC MUP Ph 3 Seg 4 Cst ℄ PT	42+76.16	N=1311618.60	E=582724.97								
407	CC MUP Ph 3 Seg 4 Cst ℄ PC	43+61.39	N=1311650.36	E=582804.05								
408	CC MUP Ph 3 Seg 4 Cst ℄ PI	44+06.48	N=1311667.17	E=582845.90	SIMPLE	Δ=6°27'09"	R=800.00'	T=45.10'	L=90.10'	Ext=1.27'	e=NC	
409	CC MUP Ph 3 Seg 4 Cst ℄ PT	44+51.48	N=1311688.58	E=582885.59								
410	CC MUP Ph 3 Seg 4 Cst ℄ POE	45+34.20	N=1311727.84	E=582958.40								
500	CC MUP Ph 3 Seg 5 Cst ℄ POB	50+00.00	N=1311735.82	E=582974.64								
501	CC MUP Ph 3 Seg 5 Cst ℄ PC	50+34.84	N=1311752.37	E=583005.29								
502	CC MUP Ph 3 Seg 5 Cst ℄ PI	50+71.58	N=1311769.84	E=583037.62	SIMPLE	Δ=13°58'03"	R=300.00'	T=36.75'	L=73.13'	Ext=2.24'	e=NC	
503	CC MUP Ph 3 Seg 5 Cst ℄ PT	51+07.97	N=1311794.59	E=583064.78								
504	CC MUP Ph 3 Seg 5 Cst ℄ PC	51+26.54	N=1311807.11	E=583078.51								
505	CC MUP Ph 3 Seg 5 Cst ℄ PI	52+09.67	N=1311863.10	E=583139.94	SIMPLE	Δ=15°46'28"	R=600.00'	T=83.12'	L=165.19'	Ext=5.73'	e=NC	
506	CC MUP Ph 3 Seg 5 Cst ℄ PT	52+91.74	N=1311900.28	E=583214.28								
507	CC MUP Ph 3 Seg 5 Cst ℄ PC	53+52.50	N=1311927.46	E=583268.63								
508	CC MUP Ph 3 Seg 5 Cst ℄ PI	53+95.33	N=1311946.62	E=583306.94	SIMPLE	Δ=4°54'17"	R=1000.00'	T=42.83'	L=85.60'	Ext=0.92'	e=NC	
509	CC MUP Ph 3 Seg 5 Cst ℄ PT	54+38.11	N=1311962.43	E=583346.74								
510	CC MUP Ph 3 Seg 5 Cst ℄ PC	56+32.06	N=1312034.04	E=583526.99								
511	CC MUP Ph 3 Seg 5 Cst ℄ PI	56+50.69	N=1312040.92	E=583544.30	SIMPLE	Δ=21°06'25"	R=100.00'	T=18.63'	L=36.84'	Ext=1.72'	e=NC	
512	CC MUP Ph 3 Seg 5 Cst ℄ PT	56+68.90	N=1312053.57	E=583557.98								
513	CC MUP Ph 3 Seg 5 Cst ℄ POE	57+03.04	N=1312076.76	E=583583.04								

CENTERLINE CONTROL POINT AND CURVE DATA TABLE

All bearings and angles have been rounded to the nearest second.
Use the control points provided and their respective state plane coordinates to re-establish the centerline of each path.

	NAME	DATE
DESIGN	JKF	06/14
DRAWN	CPG	06/14
CHECKED	GPF	06/14

PARSONS BRINCKERHOFF

ARIZONA DEPARTMENT OF TRANSPORTATION
INTERMODAL TRANSPORTATION DIVISION
ROADWAY DESIGN SECTION

GEOMETRIC SUMMARY SHEET

ROUTE | LOCATION PRESCOTT VALLEY PIPELINE & CENTRAL CORE MULTI-USE PATHS (CENTRAL CORE PHASE 3)

Registered Professional Engineer (Civil) CERTIFICATE NO. 49430 GREGORY PATRICK FLY ARIZONA U.S.A. Expires 3/31/2015

DWG NO. C4-1.02

TRACS NO. SL680 01C | TEA-PRV-0(205)T | ___ OF ___

DATE- LOCATION- REVISIONS- FINISHED PLANS- SURVEY NO.

F.H.W.A. REGION	STATE	PROJECT NO.	SHEET NO.	TOTAL SHEETS	AS BUILT
9	ARIZ.	TEA-PRV-0(205)T			
		PRV 0000 YV			

All Coordinates Are Ground Coordinates And All Bearings Are Grid Bearings

G.A.F. = 1.00032

PLAN REF NO.	LOCATION	P.I./P.O.T. STATION	COORDINATES										
600	CC MUP Ph 3 Seg 6 Cst ℄ POB	60+00.00	N=1312087.65	E=583602.45									
601	CC MUP Ph 3 Seg 6 Cst ℄ PC	61+19.61	N=1312140.17	E=583709.92									
602	CC MUP Ph 3 Seg 6 Cst ℄ PI	61+36.52	N=1312147.59	E=583725.10	SIMPLE	Δ=9°39'43"	R=200.00'	T=16.90'	L=33.73'	Ext=0.71'	e=NC		
603	CC MUP Ph 3 Seg 6 Cst ℄ PT	61+53.34	N=1312152.36	E=583741.32									
604	CC MUP Ph 3 Seg 6 Cst ℄ PC	61+78.50	N=1312159.45	E=583765.45									
605	CC MUP Ph 3 Seg 6 Cst ℄ PI	62+11.92	N=1312168.88	E=583797.52	SIMPLE	Δ=18°58'23"	R=200.00'	T=33.42'	L=66.23'	Ext=2.77'	e=NC		
606	CC MUP Ph 3 Seg 6 Cst ℄ PT	62+44.72	N=1312188.22	E=583824.77									
607	CC MUP Ph 3 Seg 6 Cst ℄ PC	63+23.56	N=1312233.83	E=583889.07									
608	CC MUP Ph 3 Seg 6 Cst ℄ PI	63+33.07	N=1312239.34	E=583896.82	SIMPLE	Δ=2°10'45"	R=500.00'	T=9.51'	L=19.02'	Ext=0.09'	e=NC		
609	CC MUP Ph 3 Seg 6 Cst ℄ PT	63+42.57	N=1312244.54	E=583904.78									
610	CC MUP Ph 3 Seg 6 Cst ℄ PC	64+60.27	N=1312308.95	E=584003.29									
611	CC MUP Ph 3 Seg 6 Cst ℄ PI	65+08.03	N=1312335.08	E=584043.27	SIMPLE	Δ=5°28'08"	R=1000.00'	T=47.76'	L=95.45'	Ext=1.14'	e=NC		
612	CC MUP Ph 3 Seg 6 Cst ℄ PT	65+55.72	N=1312357.29	E=584085.55									
613	CC MUP Ph 3 Seg 6 Cst ℄ PC	66+83.84	N=1312416.86	E=584198.98									
614	CC MUP Ph 3 Seg 6 Cst ℄ PI	67+07.42	N=1312427.83	E=584219.86	SIMPLE	Δ=4°30'09"	R=600.00'	T=23.59'	L=47.15'	Ext=0.46'	e=NC		
615	CC MUP Ph 3 Seg 6 Cst ℄ PT	67+30.99	N=1312440.40	E=584239.82									
616	CC MUP Ph 3 Seg 6 Cst ℄ PC	67+76.42	N=1312464.62	E=584278.26									
617	CC MUP Ph 3 Seg 6 Cst ℄ PI	67+99.25	N=1312476.79	E=584297.58	SIMPLE	Δ=25°43'09"	R=100.00'	T=22.83'	L=44.89'	Ext=2.57'	e=NC		
618	CC MUP Ph 3 Seg 6 Cst ℄ PT	68+21.31	N=1312496.13	E=584309.70									
619	CC MUP Ph 3 Seg 6 Cst ℄ POE	68+30.03	N=1312503.52	E=584314.32									

CENTERLINE CONTROL POINT AND CURVE DATA TABLE

All bearings and angles have been rounded to the nearest second.
Use the control points provided and their respective state plane coordinates to re-establish the centerline of each path.

	NAME	DATE
DESIGN	JKF	06/14
DRAWN	CPG	06/14
CHECKED	GPF	06/14

PARSONS BRINCKERHOFF

ARIZONA DEPARTMENT OF TRANSPORTATION
INTERMODAL TRANSPORTATION DIVISION
ROADWAY DESIGN SECTION

GEOMETRIC SUMMARY SHEET

ROUTE | LOCATION PRESCOTT VALLEY PIPELINE & CENTRAL CORE MULTI-USE PATHS (CENTRAL CORE PHASE 3)

Registered Professional Engineer (Civil) CERTIFICATE NO. 49430 GREGORY PATRICK FLY ARIZONA U.S.A. Expires 3/31/2015

DWG NO. C4-1.03

TRACS NO. SL680 01C | TEA-PRV-0(205)T | ____ OF ____

DATE- LOCATION- REVISIONS- FINISHED PLANS- SURVEY NO.

F.H.W.A. REGION	STATE	PROJECT NO.	SHEET NO.	TOTAL SHEETS	AS BUILT
9	ARIZ.	TEA-PRV-0(205)T			
		PRV 0000 YV			

All Coordinates Are Ground Coordinates And All Bearings Are Grid Bearings

G.A.F. = 1.00032

PLAN REF NO.	LOCATION	P.I./P.O.T. STATION	COORDINATES									
700	CC MUP Ph 3 Seg 7 Cst ℄ POB	70+00.00	N=1312529.60	E=584326.91								
701	CC MUP Ph 3 Seg 7 Cst ℄ PC	70+10.50	N=1312535.59	E=584335.53								
702	CC MUP Ph 3 Seg 7 Cst ℄ PI	70+33.63	N=1312548.78	E=584354.53	SIMPLE	Δ=26°02'47"	R=100.00'	T=23.13'	L=45.46'	Ext=2.64'	e=NC	
703	CC MUP Ph 3 Seg 7 Cst ℄ PT	70+55.96	N=1312568.97	E=584365.81								
704	CC MUP Ph 3 Seg 7 Cst ℄ PC	71+75.39	N=1312673.24	E=584424.05								
705	CC MUP Ph 3 Seg 7 Cst ℄ PI	71+90.46	N=1312686.40	E=584431.40	SIMPLE	Δ=3°27'11"	R=500.00'	T=15.07'	L=30.13'	Ext=0.23'	e=NC	
706	CC MUP Ph 3 Seg 7 Cst ℄ PT	72+05.52	N=1312699.09	E=584439.53								
707	CC MUP Ph 3 Seg 7 Cst ℄ PC	73+32.58	N=1312806.09	E=584508.05								
708	CC MUP Ph 3 Seg 7 Cst ℄ PI	74+03.09	N=1312865.46	E=584546.08	SIMPLE	Δ=10°04'21"	R=800.00'	T=70.50'	L=140.64'	Ext=3.10'	e=NC	
709	CC MUP Ph 3 Seg 7 Cst ℄ PT	74+73.22	N=1312917.26	E=584593.90								
710	CC MUP Ph 3 Seg 7 Cst ℄ PC	75+39.14	N=1312965.70	E=584638.61								
711	CC MUP Ph 3 Seg 7 Cst ℄ PI	75+69.97	N=1312988.35	E=584659.52	SIMPLE	Δ=17°31'38"	R=200.00'	T=30.83'	L=61.18'	Ext=2.36'	e=NC	
712	CC MUP Ph 3 Seg 7 Cst ℄ PT	76+00.32	N=1313003.66	E=584686.28								
713	CC MUP Ph 3 Seg 7 Cst ℄ PC	76+73.59	N=1313040.03	E=584749.89								
714	CC MUP Ph 3 Seg 7 Cst ℄ PI	76+90.17	N=1313048.26	E=584764.28	SIMPLE	Δ=3°47'54"	R=500.00'	T=16.58'	L=33.15'	Ext=0.27'	e=NC	
715	CC MUP Ph 3 Seg 7 Cst ℄ PT	77+06.74	N=1313055.52	E=584779.19								
716	CC MUP Ph 3 Seg 7 Cst ℄ PC	78+63.23	N=1313124.03	E=584919.88								
717	CC MUP Ph 3 Seg 7 Cst ℄ PI	78+77.68	N=1313130.36	E=584932.87	SIMPLE	Δ=1°39'20"	R=1000.00'	T=14.45'	L=28.90'	Ext=0.10'	e=NC	
718	CC MUP Ph 3 Seg 7 Cst ℄ PT	78+92.12	N=1313136.31	E=584946.04								
719	CC MUP Ph 3 Seg 7 Cst ℄ PC	81+25.76	N=1313232.48	E=585158.96								
720	CC MUP Ph 3 Seg 7 Cst ℄ PI	81+46.89	N=1313241.18	E=585178.22	SIMPLE	Δ=12°04'00"	R=200.00'	T=21.14'	L=42.12'	Ext=1.11'	e=NC	
721	CC MUP Ph 3 Seg 7 Cst ℄ PT	81+67.88	N=1313253.72	E=585195.24								
722	CC MUP Ph 3 Seg 7 Cst ℄ PC	81+87.88	N=1313265.59	E=585211.35								
723	CC MUP Ph 3 Seg 7 Cst ℄ PI	82+30.67	N=1313290.96	E=585245.80	SIMPLE	Δ=46°19'50"	R=100.00'	T=42.79'	L=80.86'	Ext=8.77'	e=NC	
724	CC MUP Ph 3 Seg 7 Cst ℄ PT	82+68.74	N=1313283.56	E=585287.95								
725	CC MUP Ph 3 Seg 7 Cst ℄ POE	82+76.46	N=1313282.23	E=585295.55								

CENTERLINE CONTROL POINT AND CURVE DATA TABLE

All bearings and angles have been rounded to the nearest second.
Use the control points provided and their respective state plane coordinates to re-establish the centerline of each path.

	NAME	DATE
DESIGN	JKF	06/14
DRAWN	CPG	06/14
CHECKED	GPF	06/14

PARSONS BRINCKERHOFF

ARIZONA DEPARTMENT OF TRANSPORTATION
INTERMODAL TRANSPORTATION DIVISION
ROADWAY DESIGN SECTION

GEOMETRIC SUMMARY SHEET

Registered Professional Engineer (Civil) CERTIFICATE NO. 49430 GREGORY PATRICK FLY ARIZONA U.S.A. Expires 3/31/2015

ROUTE | LOCATION PRESCOTT VALLEY PIPELINE & CENTRAL CORE MULTI-USE PATHS (CENTRAL CORE PHASE 3)

DWG NO. C4-1.04

TRACS NO. SL680 01C | TEA-PRV-0(205)T | ___ OF ___

DATE- LOCATION- REVISIONS- FINISHED PLANS- SURVEY NO.

F.H.W.A. REGION	STATE	PROJECT NO.	SHEET NO.	TOTAL SHEETS	AS BUILT
9	ARIZ.	TEA-PRV-0(205)T			
		PRV 0000 YV			

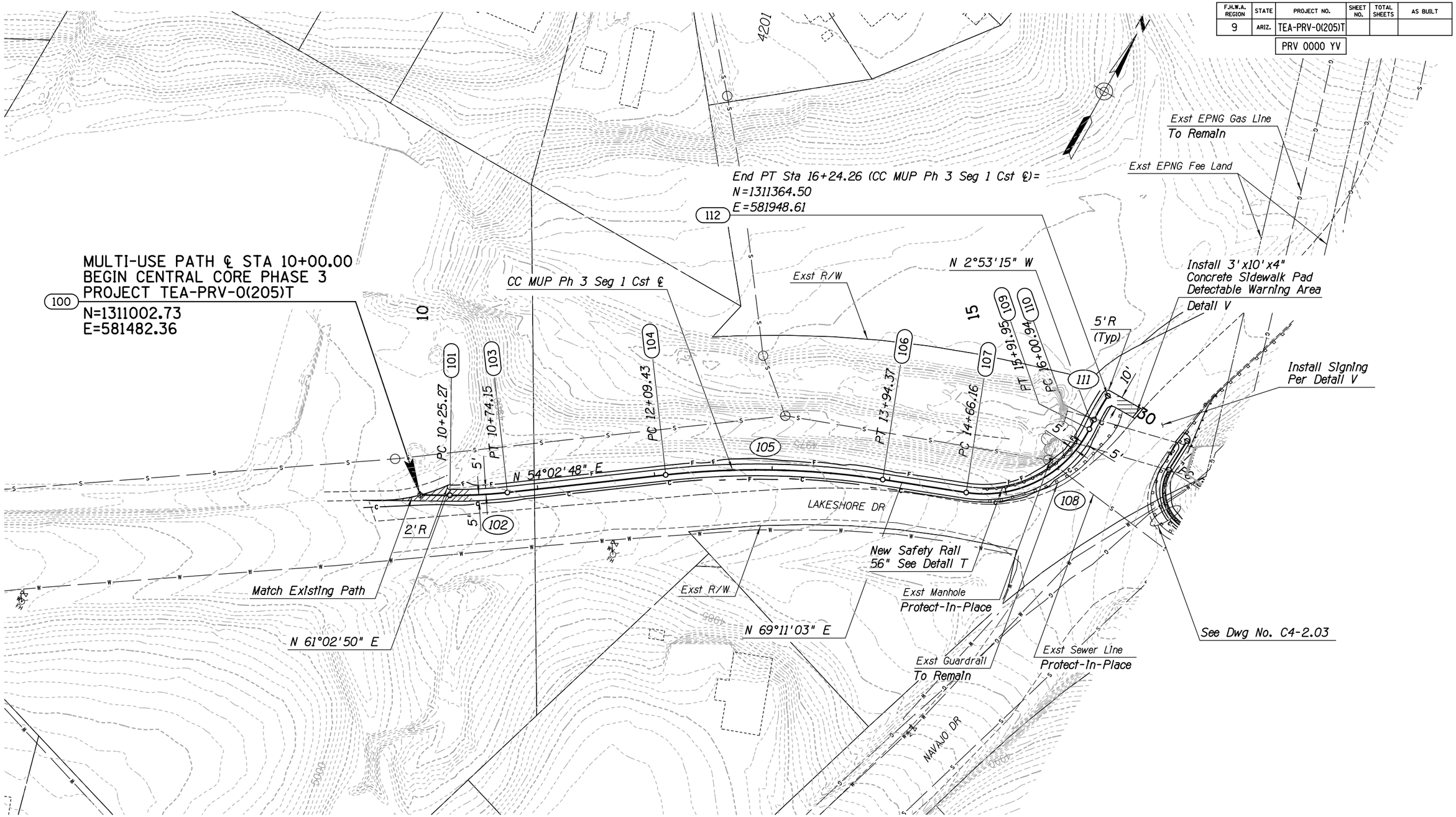

NOTE:
Caution, EPNG high pressure natural gas line present. EPNG Supervisor should be contacted at 928-527-6535 a minimum of 72 hours prior to any construction activities inside EPNG property.

NOTES:

1. See Detail U for pavement tie-in information.

	NAME	DATE
DESIGN	JKF	06/14
DRAWN	CPG	06/14
CHECKED	GPF	06/14

PARSONS BRINCKERHOFF

ARIZONA DEPARTMENT OF TRANSPORTATION
INTERMODAL TRANSPORTATION DIVISION
ROADWAY DESIGN SECTION

PLAN SHEET
Sta 10+00 to Sta 16+24.26

ROUTE | LOCATION PRESCOTT VALLEY PIPELINE & CENTRAL CORE MULTI-USE PATHS (CENTRAL CORE PHASE 3)

Registered Professional Engineer (Civil) CERTIFICATE NO. 49430 GREGORY PATRICK FLY ARIZONA U.S.A.
Expires 3/31/2015

DWG NO. C4-2.01

TRACS NO. SL680 01C | TEA-PRV-0(205)T | ___ OF ___

DATE- LOCATION- REVISIONS- FINISHED PLANS- SURVEY NO.

9/12/2014 T:\Prescott_MUP\SL694_ph3\MUP\SL694-p101.dgn

F.H.W.A. REGION	STATE	PROJECT NO.	SHEET NO.	TOTAL SHEETS	AS BUILT
9	ARIZ.	TEA-PRV-0(205)T			
		PRV 0000 YV			

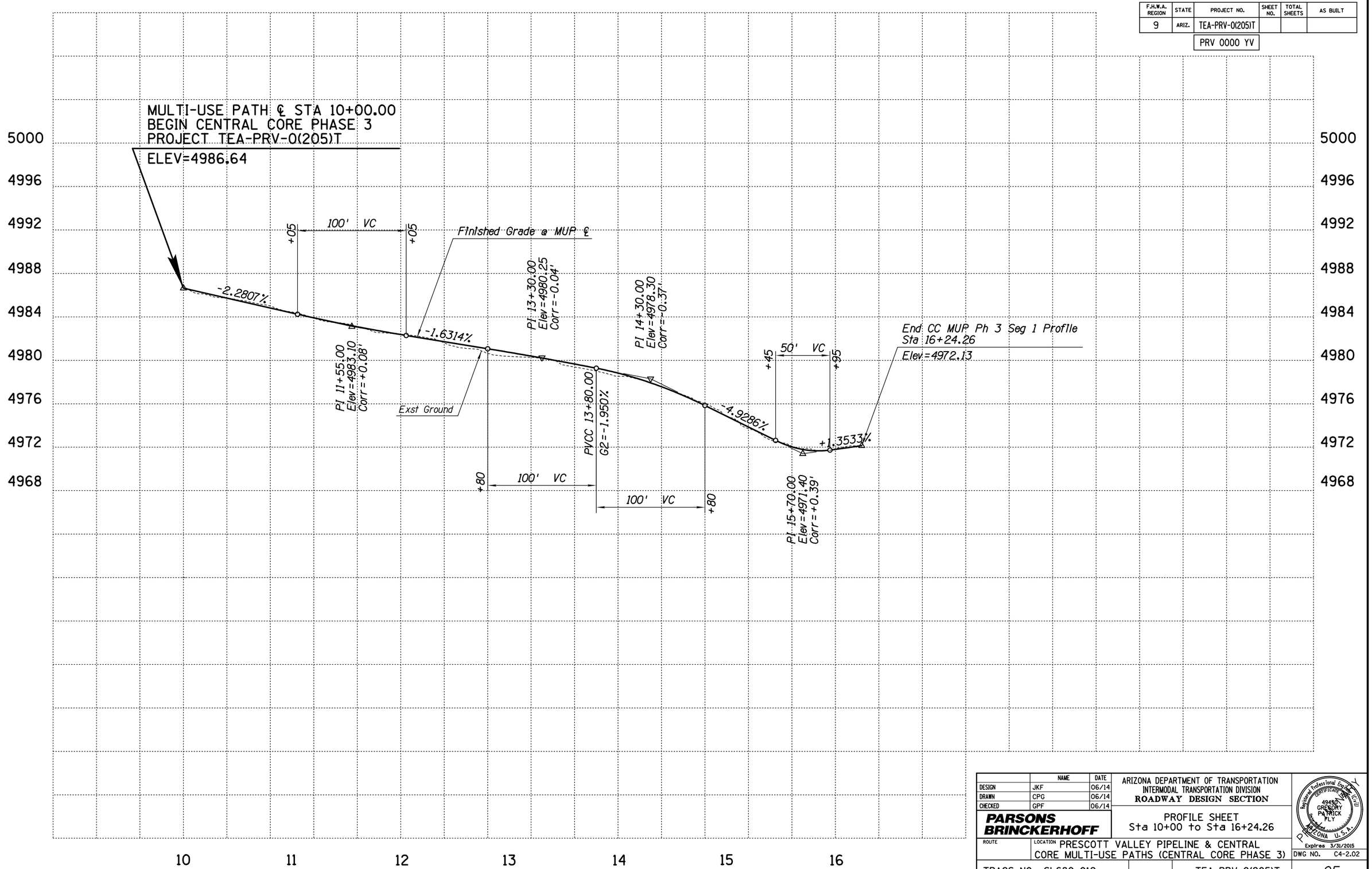

	NAME	DATE
DESIGN	JKF	06/14
DRAWN	CPG	06/14
CHECKED	GPF	06/14

PARSONS BRINCKERHOFF

ARIZONA DEPARTMENT OF TRANSPORTATION
INTERMODAL TRANSPORTATION DIVISION
ROADWAY DESIGN SECTION

PROFILE SHEET
Sta 10+00 to Sta 16+24.26

ROUTE | LOCATION PRESCOTT VALLEY PIPELINE & CENTRAL CORE MULTI-USE PATHS (CENTRAL CORE PHASE 3)

Registered Professional Engineer (Civil) CERTIFICATE NO. 49430 GREGORY PATRICK FLY ARIZONA U.S.A. Expires 3/31/2015

DWG NO. C4-2.02

TRACS NO. SL680 01C | TEA-PRV-0(205)T | ____ OF ____

DATE- LOCATION- REVISIONS- FINISHED PLANS- SURVEY NO.

9/12/2014 T:\Prescott_MUP\SL694_ph3\MUP\SL694_ccprf01.dgn

F.H.W.A. REGION	STATE	PROJECT NO.	SHEET NO.	TOTAL SHEETS	AS BUILT
9	ARIZ.	TEA-PRV-0(205)T			

PRV 0000 YV

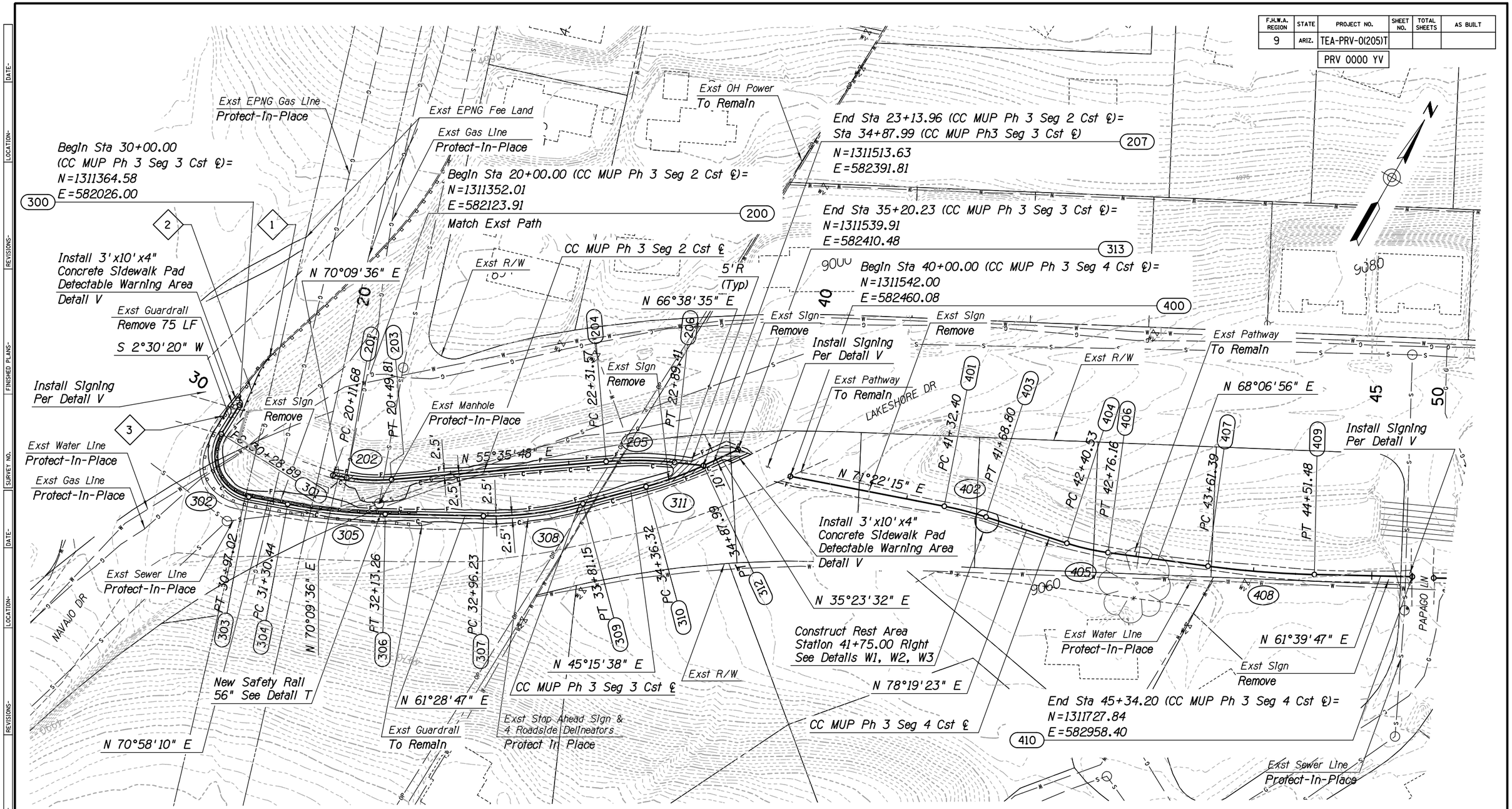

NOTE:
Caution, EPNG high pressure natural gas line present. EPNG Supervisor should be contacted at 928-527-6535 a minimum of 72 hours prior to any construction activities inside EPNG property.

NOTES:

1. See Detail U for pavement tie-in information.

2. Only signing to be completed between Sta 40+00.00 and Sta 45+34.20. Paving activities end at Sta 35+20.23.

	NAME	DATE
DESIGN	JKF	06/14
DRAWN	CPG	06/14
CHECKED	GPF	06/14

PARSONS BRINCKERHOFF

ARIZONA DEPARTMENT OF TRANSPORTATION
INTERMODAL TRANSPORTATION DIVISION
ROADWAY DESIGN SECTION

PLAN SHEET
Sta 20+00 to Sta 45+34.20

ROUTE | LOCATION PRESCOTT VALLEY PIPELINE & CENTRAL CORE MULTI-USE PATHS (CENTRAL CORE PHASE 3)

Registered Professional Engineer (Civil) CERTIFICATE NO. 49430 GREGORY PATRICK FLY ARIZONA U.S.A.
Expires 3/31/2015

DWG NO. C4-2.03

TRACS NO. SL680 01C | TEA-PRV-0(205)T | ____ OF ____

9/12/2014 T:\Prescott_MUP\SL694_ph3\MUP\SL694-p102.dgn

F.H.W.A. REGION	STATE	PROJECT NO.	SHEET NO.	TOTAL SHEETS	AS BUILT
9	ARIZ.	TEA-PRV-0(205)T			
		PRV 0000 YV			

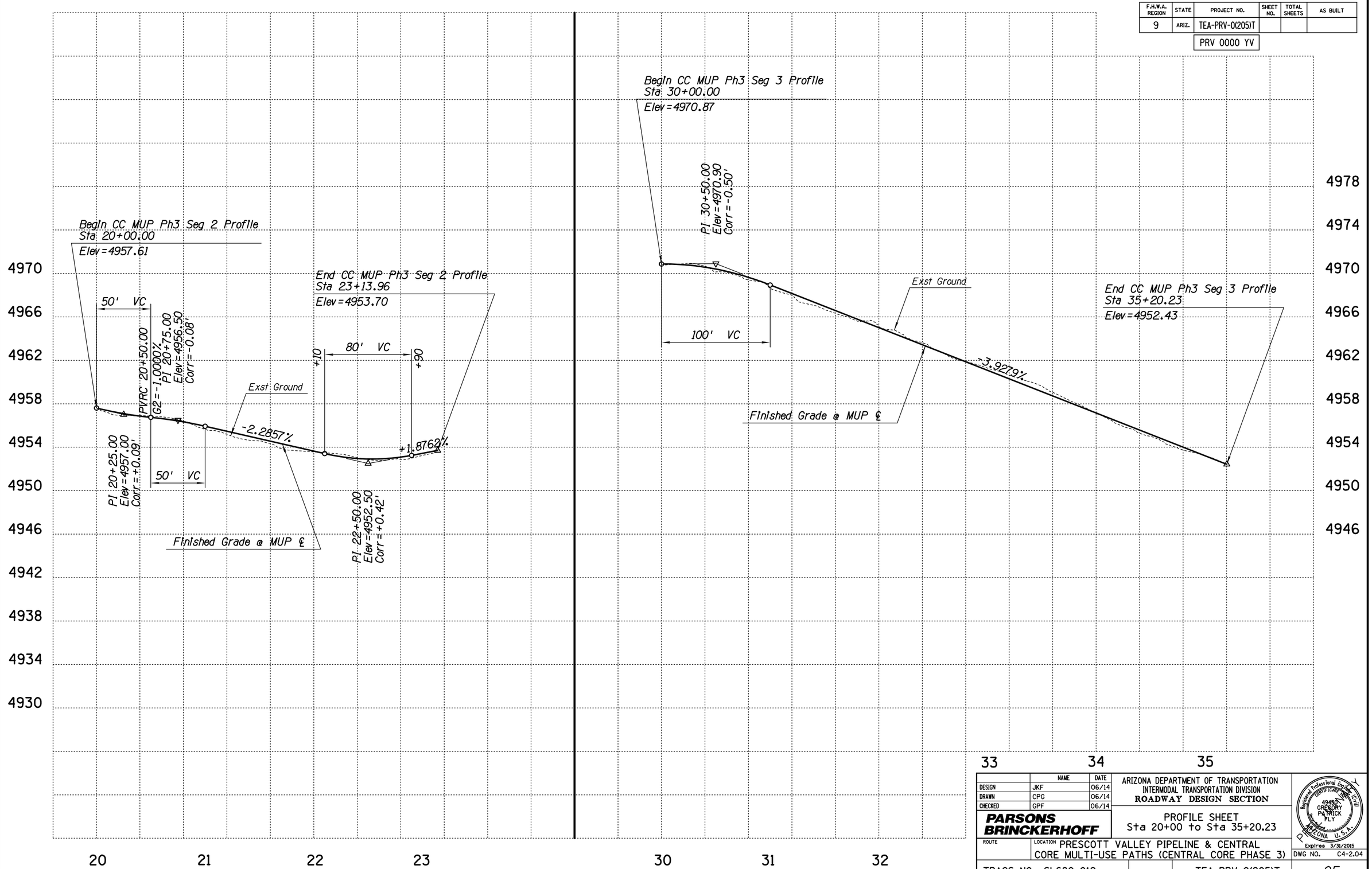

	NAME	DATE
DESIGN	JKF	06/14
DRAWN	CPG	06/14
CHECKED	GPF	06/14

PARSONS BRINCKERHOFF

ARIZONA DEPARTMENT OF TRANSPORTATION
INTERMODAL TRANSPORTATION DIVISION
ROADWAY DESIGN SECTION

PROFILE SHEET
Sta 20+00 to Sta 35+20.23

Registered Professional Engineer (Civil) CERTIFICATE NO. 49430 GREGORY PATRICK FLY ARIZONA U.S.A.
Expires 3/31/2015

ROUTE | LOCATION PRESCOTT VALLEY PIPELINE & CENTRAL CORE MULTI-USE PATHS (CENTRAL CORE PHASE 3)

DWG NO. C4-2.04

TRACS NO. SL680 01C | TEA-PRV-0(205)T | ___ OF ___

9/12/2014 T:\Prescott_MUP\SL694_ph3\MUP\SL694_ccprf02.dgn

SURVEY NO. | FINISHED PLANS- | REVISIONS- | LOCATION- | DATE-

F.H.W.A. REGION	STATE	PROJECT NO.	SHEET NO.	TOTAL SHEETS	AS BUILT
9	ARIZ.	TEA-PRV-0(205)T			
		PRV 0000 YV			

	NAME	DATE
DESIGN	JKF	06/14
DRAWN	CPG	06/14
CHECKED	GPF	06/14

PARSONS BRINCKERHOFF

ARIZONA DEPARTMENT OF TRANSPORTATION
INTERMODAL TRANSPORTATION DIVISION
ROADWAY DESIGN SECTION

PLAN SHEET
Sta 50+00 to Sta 57+03.04

ROUTE | LOCATION PRESCOTT VALLEY PIPELINE & CENTRAL CORE MULTI-USE PATHS (CENTRAL CORE PHASE 3)

Registered Professional Engineer (Civil) CERTIFICATE NO. 49450 GREGORY PATRICK FLY ARIZONA U.S.A.
Expires 3/31/2015

DWG NO. C4-2.05

TRACS NO. SL680 01C | TEA-PRV-0(205)T | ___ OF ___

SURVEY NO. | FINISHED PLANS- | REVISIONS- | LOCATION- | DATE-

9/12/2014 T:\Prescott_MUP\SL694_ph3\MUP\SL694-pl03.dgn

F.H.W.A. REGION	STATE	PROJECT NO.	SHEET NO.	TOTAL SHEETS	AS BUILT
9	ARIZ.	TEA-PRV-0(205)T			
		PRV 0000 YV			

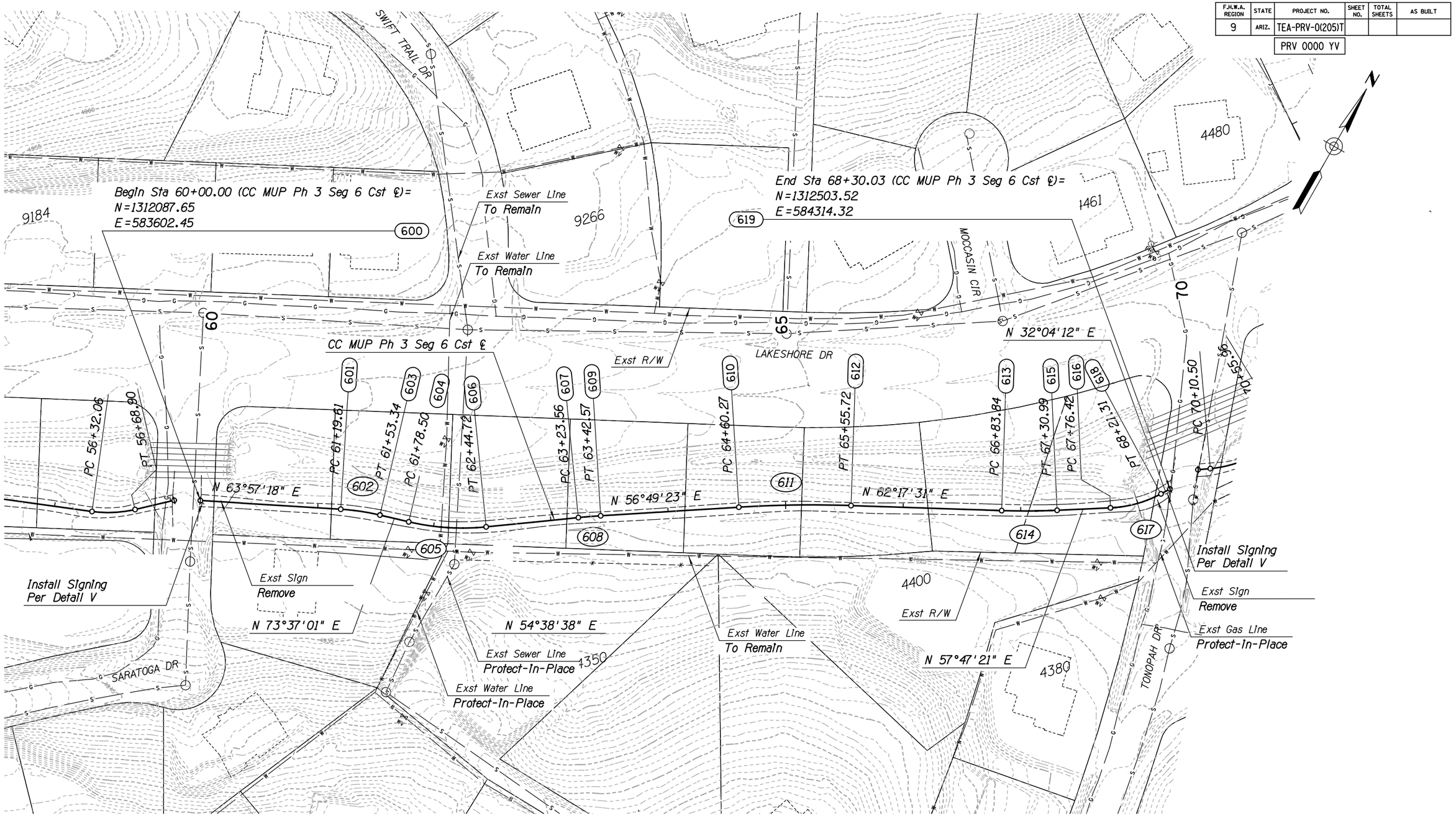

	NAME	DATE
DESIGN	JKF	06/14
DRAWN	CPG	06/14
CHECKED	GPF	06/14

PARSONS BRINCKERHOFF

ARIZONA DEPARTMENT OF TRANSPORTATION
INTERMODAL TRANSPORTATION DIVISION
ROADWAY DESIGN SECTION

PLAN SHEET
Sta 60+00 to Sta 68+30.03

ROUTE | LOCATION: PRESCOTT VALLEY PIPELINE & CENTRAL CORE MULTI-USE PATHS (CENTRAL CORE PHASE 3)

Registered Professional Engineer (Civil) CERTIFICATE NO. 49450 GREGORY PATRICK FLY ARIZONA U.S.A. Expires 3/31/2015

DWG NO. C4-2.06

TRACS NO. SL680 01C | TEA-PRV-0(205)T | ____ OF ____

DATE- LOCATION- REVISIONS- FINISHED PLANS- SURVEY NO.

9/12/2014 I:\Prescott_MUP\SL694_ph3\MUP\SL694-p104.dgn

F.H.W.A. REGION	STATE	PROJECT NO.	SHEET NO.	TOTAL SHEETS	AS BUILT
9	ARIZ.	TEA-PRV-0(205)T			

PRV 0000 YV

	NAME	DATE
DESIGN	JKF	06/14
DRAWN	CPG	06/14
CHECKED	GPF	06/14

PARSONS BRINCKERHOFF

ARIZONA DEPARTMENT OF TRANSPORTATION
INTERMODAL TRANSPORTATION DIVISION
ROADWAY DESIGN SECTION

PLAN SHEET
Sta 70+00 to Sta 78+00

ROUTE | LOCATION PRESCOTT VALLEY PIPELINE & CENTRAL CORE MULTI-USE PATHS (CENTRAL CORE PHASE 3)

Registered Professional Engineer (Civil) CERTIFICATE NO. 49430 GREGORY PATRICK FLY ARIZONA U.S.A.
Expires 3/31/2015

DWG NO. C4-2.07

TRACS NO. SL680 01C | TEA-PRV-0(205)T | ___ OF ___

DATE- LOCATION- REVISIONS- FINISHED PLANS- SURVEY NO.

9/12/2014 T:\Prescott_MUP\SL694_ph3\MUP\SL694-p105.dgn

F.H.W.A. REGION	STATE	PROJECT NO.	SHEET NO.	TOTAL SHEETS	AS BUILT
9	ARIZ.	TEA-PRV-0(205)T			

PRV 0000 YV

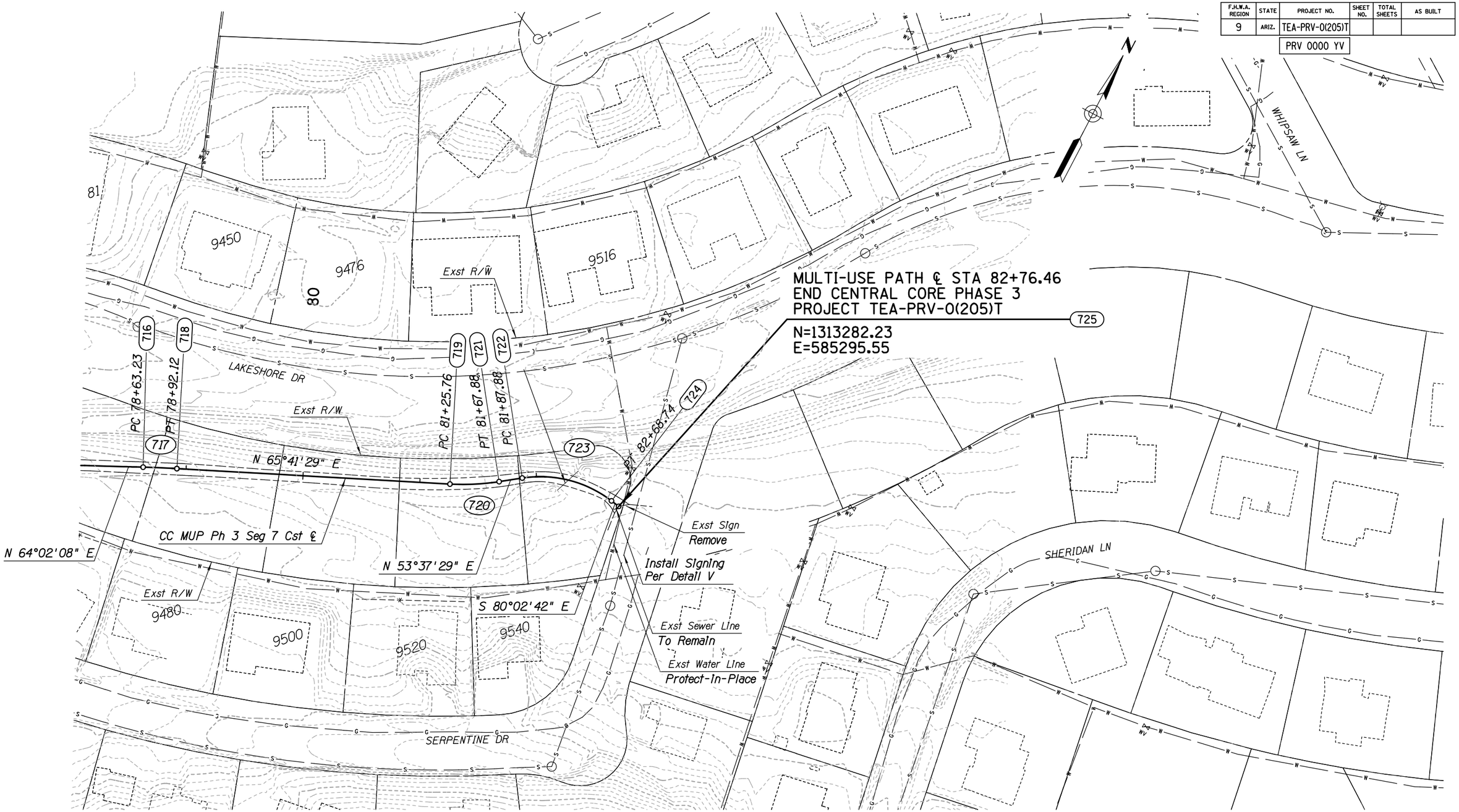

	NAME	DATE
DESIGN	JKF	06/14
DRAWN	CPG	06/14
CHECKED	GPF	06/14

PARSONS BRINCKERHOFF

ARIZONA DEPARTMENT OF TRANSPORTATION
INTERMODAL TRANSPORTATION DIVISION
ROADWAY DESIGN SECTION

PLAN SHEET
Sta 78+00 to Sta 82+76.46

Registered Professional Engineer (Civil)
CERTIFICATE NO. 49430
GREGORY PATRICK FLY
ARIZONA U.S.A.
Expires 3/31/2015

ROUTE | LOCATION PRESCOTT VALLEY PIPELINE & CENTRAL CORE MULTI-USE PATHS (CENTRAL CORE PHASE 3)

DWG NO. C4-2.08

TRACS NO. SL680 01C | TEA-PRV-0(205)T | ___ OF ___

SURVEY NO. | FINISHED PLANS- | REVISIONS- | LOCATION- | DATE-

F.H.W.A. REGION	STATE	PROJECT NO.	SHEET NO.	TOTAL SHEETS	AS BUILT
9	ARIZ.	TEA-PRV-0(205)T			
		PRV 0000 YV			

SIGNING GENERAL NOTES:

1. ALL SIGNS SHALL BE IN COMPLIANCE WITH THE MANUAL ON UNIFORM TRAFFIC CONTROL DEVICES (MUTCD), THE ADOT SIGNING AND MARKING STANDARD DRAWINGS, THE ADOT TRAFFIC ENGINEERING MANUAL OF APPROVED SIGNS, THESE PLANS, AND THE SPECIAL PROVISIONS.
2. SIGNING MAY BE MODIFIED AS DIRECTED BY THE ENGINEER. THE ENGINEER MAY SHIFT THE LOCATION OF A SIGN TO A MORE FAVORABLE LOCATION IN ACCORDANCE WITH THE STANDARD DRAWINGS.
3. SHOP DRAWINGS OF THE SIGN PANELS ARE NOT REQUIRED.
4. NORMAL OFFSET FOR ALL SIGNS SHALL BE 12 FEET FROM THE NEAR EDGE OF THE SIGN TO THE EDGE OF THE PAVEMENT UNLESS OTHERWISE NOTED ON THE SIGNING SUMMARY SHEET, ON THE PLANS, OR AS DIRECTED BY THE ENGINEER.
5. ALL SIGN LOCATIONS AND POST LENGTHS ARE APPROXIMATE. THE CONTRACTOR SHALL VERIFY ACTUAL SIGN LOCATIONS WITH THE ENGINEER PRIOR TO CONSTRUCTING THE FOUNDATIONS FOR THE SIGN SUPPORTS. THE CONTRACTOR SHALL VERIFY ACTUAL POST LENGTHS AFTER FINAL GRADING.
6. NORMAL MOUNTING HEIGHT FOR THE BOTTOM OF THE LOWEST SIGN ON THE POST SHALL BE SEVEN FEET ABOVE THE NEAREST SHOULDER EDGE OR TOP OF CURB ELEVATION. THE BOTTOM OF THE SIGN SHALL BE AT LEAST 7 FEET ABOVE THE GROUND UNDER THE SIGN.
7. THE CONTRACTOR SHALL REMOVE EXISTING SIGNING WHERE INDICATED ON THE PLAN SHEET. FOUNDATIONS OF EXISTING SIGNS THAT ARE TO BE REMOVED OR RELOCATED SHALL BE REMOVED A MINIMUM OF 2 FEET BELOW FINISHED GRADE.
8. THE CONTRACTOR SHALL INVENTORY ALL SIGNS TO REMAIN OR BE RELOCATED, AND NOTE DAMAGED SIGNS TO THE ENGINEER BEFORE CONSTRUCTION BEGINS. ALL SIGNS SUBSEQUENTLY DAMAGED SHALL BE REPLACED BY THE CONTRACTOR AT NO COST TO THE DEPARTMENT.
9. ALL NEW SIGNS SHALL BE INSTALLED ON NEW SQUARE TUBE POSTS WITH FOUNDATIONS AS INDICATED IN STD DWGS S-1 AND S-3.
10. ALL METAL HARDWARE SHALL BE STAINLESS STEEL, GALVANIZED CADMIUM PLATED OR ALUMINUM TO PREVENT RUST.
11. ALL SIGNS SHALL BE FABRICATED OF FLAT SHEET ALUMINUM PANELS WITH DIRECT APPLIED OR SILK SCREENED COPY PER SECTIONS 608-2.07 AND 608-2.09 OF THE SPECIFICATIONS. ALL SIGNS SHALL MEET THE CRITERIA ESTABLISHED FOR TYPE IX OR XI SHEETING.
12. QUANTITIES ARE APPROXIMATE AND FOR THE CONTRACTOR'S INFORMATION ONLY.
13. ALL DIMENSIONS ARE IN FEET, UNLESS OTHERWISE NOTED.

SIGNING LEGEND:

▶	SIGN
▷	EXISTING SIGN

APPROXIMATE SIGNING QUANTITIES

ITEM DESCRIPTION		UNIT	QUANTITY	ITEM NO.
REGULATORY, WARNING OR MARKER SIGN PANEL	IX OR XI	SQ FT	176	6080005
PERFORATED SIGN POST	2 S	LF	242	6070054
PERFORATED SIGN POST FOUNDATION	CONCRETE	EACH	22	6070060

	NAME	DATE
DESIGN	JKF	06/14
DRAWN	CPG	06/14
CHECKED	GPF	06/14

PARSONS BRINCKERHOFF

ARIZONA DEPARTMENT OF TRANSPORTATION
INTERMODAL TRANSPORTATION DIVISION
ROADWAY DESIGN SECTION

SIGNING PLAN
GENERAL NOTES

Registered Professional Engineer (Civil) CERTIFICATE NO. 49450 GREGORY PATRICK FLY ARIZONA U.S.A. Expires 3/31/2015

ROUTE | LOCATION PRESCOTT VALLEY PIPELINE & CENTRAL CORE MULTI-USE PATHS (CENTRAL CORE PHASE 3)

DWG NO. T4- 1.01

TRACS NO. SL680 01C | TEA-PRV-0(205)T | ___ OF ___

SURVEY NO. | FINISHED PLANS- | REVISIONS- | LOCATION- | DATE-

Plan Sht No.	Sign Number	MOAS Sign Code	Work: New	Work: Existing: Replace Panel	Work: Existing: Relocate Panel	Work: Existing: Modify Legend	Work: Existing: Remove	Work: Existing: To Remain	Offset (ft)	Mounting Height (ft)	Background Color	Panel: Legend	Panel: Width (in.)	Panel: Height (in.)	Panel: Area (sq. ft.)	Panel: Type	Panel: Bid Item Number	Ground Mounted: Foundations	Ground Mounted: Posts: Type	Ground Mounted: Posts: Total length (ft)	Ground Mounted: New Slipbases	Ground Mounted: Stringer: Type	Ground Mounted: Stringer: Total Length (ft)	Overhead: Structure Type	Overhead: Number of Lights	Remarks
C4-2.01	1	R5-3	X							7	WH	NO MOTOR VEHICLES	24	24	4	RWM	6080005	1	2S	11						BACK TO BACK, SEE DETAIL V
	2	R1-2	X								WH	YIELD	18	15.6	1	RWM	6080005									NAVAJO
C4-2.01	3	W11-15	X							7	YL	TRAIL CROSSING	30	30	7	RWM	6080005	1	2S	11						SEE DETAIL V, NAVAJO DR
	4	W11-15P	X								YL	TRAIL CROSSING (PLAQUE)	24	12	2	RWM	6080005									
	5	W16-7P	X								YL	DOWNWARD DIRECTIONAL ARROW	24	12	2	RWM	6080005									
C4-2.01	6	R5-3	X							7	WH	NO MOTOR VEHICLES	24	24	4	RWM	6080005	1	2S	11						BACK TO BACK, SEE DETAIL V
	7	R1-2	X								WH	YIELD	18	15.6	1	RWM	6080005									NAVAJO DR
C4-2.01	8	W11-15	X							7	YL	TRAIL CROSSING	30	30	7	RWM	6080005	1	2S	11						SEE DETAIL V, NAVAJO DR
	9	W11-15P	X								YL	TRAIL CROSSING (PLAQUE)	24	12	2	RWM	6080005									
	10	W16-7P	X								YL	DOWNWARD DIRECTIONAL ARROW	24	12	2	RWM	6080005									
C4-2.03	1	R5-3	X							7	WH	NO MOTOR VEHICLES	24	24	4	RWM	6080005	1	2S	11						BACK TO BACK, SEE DETAIL V
	2	R1-2	X								WH	YIELD	18	15.6	1	RWM	6080005									LAKESHORE DR
C4-2.03	3	W11-15	X							7	YL	TRAIL CROSSING	30	30	7	RWM	6080005	1	2S	11						SEE DETAIL V, LAKESHORE DR
	4	W11-15P	X								YL	TRAIL CROSSING (PLAQUE)	24	12	2	RWM	6080005									
	5	W16-7P	X								YL	DOWNWARD DIRECTIONAL ARROW	24	12	2	RWM	6080005									
C4-2.03	6	R5-3	X							7	WH	NO MOTOR VEHICLES	24	24	4	RWM	6080005	1	2S	11						BACK TO BACK, SEE DETAIL V
	7	R1-2	X								WH	YIELD	18	15.6	1	RWM	6080005									LAKESHORE DR, SEE PLANS FOR
																										SIGN REMOVAL
C4-2.03	8	W11-15	X							7	YL	TRAIL CROSSING	30	30	7	RWM	6080005	1	2S	11						SEE DETAIL V, LAKESHORE DR
	9	W11-15P	X								YL	TRAIL CROSSING (PLAQUE)	24	12	2	RWM	6080005									
	10	W16-7P	X								YL	DOWNWARD DIRECTIONAL ARROW	24	12	2	RWM	6080005									
C4-2.03	1	R5-3	X							7	WH	NO MOTOR VEHICLES	24	24	4	RWM	6080005	1	2S	11						BACK TO BACK, SEE DETAIL V
	2	R1-2	X								WH	YIELD	18	15.6	1	RWM	6080005									PAPAGO LN, SEE PLANS FOR
																										SIGN REMOVAL
C4-2.03	3	W11-15	X							7	YL	TRAIL CROSSING	30	30	7	RWM	6080005	1	2S	11						SEE DETAIL V, PAPAGO LN
	4	W11-15P	X								YL	TRAIL CROSSING (PLAQUE)	24	12	2	RWM	6080005									
	5	W16-7P	X								YL	DOWNWARD DIRECTIONAL ARROW	24	12	2	RWM	6080005									

F.H.W.A. REGION	STATE	PROJECT NO.	SHEET NO.	TOTAL SHEETS	AS BUILT
9	ARIZ.	TEA-PRV-0(205)T			
		PRV 0000 YV			

Notes:

1. The Engineer shall verify post lengths and elevations.
2. The Engineer may shift a sign in order to achieve a more desirable location.
3. Quantities are approximate and for the contractor's information only.

Panel Types:

RWM: Regulatory, Warning or Marker
F-DA: Flat-sheet aluminum with direct applied or silk-screened characters
F-Dem: Flat-sheet aluminum with demountable characters
Ext: Aluminum extrusions

Sheeting Type:
See Special Provisions Section 1007

Stringer Types:
P:Square-tube post
T:T-Section

Post Types:
2S-2" Single
2T-2" Telescoping
2 1/2S-2½" Single
2 1/2T-2½" Telescoping

	NAME	DATE
DESIGN	JKF	06/14
DRAWN	CPG	06/14
CHECKED	GPF	06/14

PARSONS BRINCKERHOFF

ARIZONA DEPARTMENT OF TRANSPORTATION
INTERMODAL TRANSPORTATION DIVISION

SIGN SUMMARY SHEET

ROUTE | LOCATION: PRESCOTT VALLEY PIPELINE & CENTRAL CORE MULTI-USE PATHS (CENTRAL CORE PHASE 3)

TRACS NO. SL680 01C | TEA-PRV-0(205)T

Registered Professional Engineer (Civil) CERTIFICATE NO. 49430 GREGORY PATRICK FLY ARIZONA U.S.A. Expires 3/31/2015

DWG NO. T4-2.01

____ OF ____

DATE | DESCRIPTION OF REVISION | MADE BY | NO.1 | NO.2

$DATE$ 9/12/2014 T:\Prescott_MUP\SL694_ph3\Pvmk-Sign-MOT\SL694_ssum01.dgn

Plan Sht No.	Sign Number	MOAS Sign Code	Work: New	Work: Existing: Replace Panel	Work: Existing: Relocate Panel	Work: Existing: Modify Legend	Work: Existing: Remove	Work: Existing: To Remain	Offset (ft)	Mounting Height (ft)	Background Color	Panel: Legend	Panel: Width (in.)	Panel: Height (in.)	Panel: Area (sq. ft.)	Panel: Type	Panel: Bid Item Number	Ground Mounted: Foundations	Ground Mounted: Posts: Type	Ground Mounted: Posts: Total length (ft)	Ground Mounted: New Slipbases	Ground Mounted: Stringer: Type	Ground Mounted: Stringer: Total Length (ft)	Overhead: Structure Type	Overhead: Number of Lights	Remarks
C4-2.03	6	R5-3	X							7	WH	NO MOTOR VEHICLES	24	24	4	RWM	6080005	1	2S	11						BACK TO BACK, SEE DETAIL V
	7	R1-2	X								WH	YIELD	18	15.6	1	RWM	6080005									PAPAGO LN, SEE PLANS FOR
																										SIGN REMOVAL
C4-2.03	8	W11-15	X							7	YL	TRAIL CROSSING	30	30	7	RWM	6080005	1	2S	11						SEE DETAIL V, PAPAGO LN
	9	W11-15P	X								YL	TRAIL CROSSING (PLAQUE)	24	12	2	RWM	6080005									
	10	W16-7P	X								YL	DOWNWARD DIRECTIONAL ARROW	24	12	2	RWM	6080005									
C4-2.03							X					EXST GAS PIPELINE INDICATOR	4	36	1		2020053									REMOVE SIGN
							X					EXST NO PARKING, TOW-AWAY ZONE	8	12	1		2020053									REMOVE SIGN AND POST
							X					EXST NO MOTORIZED VEHICLES	12	18	2		2020053									REMOVE SIGN AND POST
							X					EXST NO MOTORIZED VEHICLES	12	18	2		2020053									REMOVE SIGN AND POST
							X					EXST NO MOTORIZED VEHICLES	12	18	2		2020053									REMOVE SIGN AND POST
C4-2.05	1	R5-3	X							7	WH	NO MOTOR VEHICLES	24	24	4	RWM	6080005	1	2S	11						BACK TO BACK, SEE DETAIL V
	2	R1-2	X								WH	YIELD	18	15.6	1	RWM	6080005									SARATOGA DR, SEE PLANS FOR
																										SIGN REMOVAL
C4-2.05	3	W11-15	X							7	YL	TRAIL CROSSING	30	30	7	RWM	6080005	1	2S	11						SEE DETAIL V, SARATOGA DR
	4	W11-15P	X								YL	TRAIL CROSSING (PLAQUE)	24	12	2	RWM	6080005									
	5	W16-7P	X								YL	DOWNWARD DIRECTIONAL ARROW	24	12	2	RWM	6080005									
C4-2.05	6	R5-3	X							7	WH	NO MOTOR VEHICLES	24	24	4	RWM	6080005	1	2S	11						BACK TO BACK, SEE DETAIL V
	7	R1-2	X								WH	YIELD	18	15.6	1	RWM	6080005									SARATOGA DR, SEE PLANS FOR
																										SIGN REMOVAL
C4-2.05	8	W11-15	X							7	YL	TRAIL CROSSING	30	30	7	RWM	6080005	1	2S	11						SEE DETAIL V, SARATOGA DR
	9	W11-15P	X								YL	TRAIL CROSSING (PLAQUE)	24	12	2	RWM	6080005									
	10	W16-7P	X								YL	DOWNWARD DIRECTIONAL ARROW	24	12	2	RWM	6080005									
C4-2.05							X					EXST NO MOTORIZED VEHICLES	12	18	2		2020053									REMOVE SIGN AND POST
							X					EXST NO MOTORIZED VEHICLES	12	18	2		2020053									REMOVE SIGN AND POST
C4-2.06							X					EXST NO MOTORIZED VEHICLES	12	18	2		2020053									REMOVE SIGN AND POST
							X					EXST NO MOTORIZED VEHICLES	12	18	2		2020053									REMOVE SIGN AND POST

F.H.W.A. REGION	STATE	PROJECT NO.	SHEET NO.	TOTAL SHEETS	AS BUILT
9	ARIZ.	TEA-PRV-0(205)T			
		PRV 0000 YV			

Notes:

1. The Engineer shall verify post lengths and elevations.
2. The Engineer may shift a sign in order to achieve a more desirable location.
3. Quantities are approximate and for the contractor's information only.

Panel Types:

RWM: Regulatory, Warning or Marker
F-DA: Flat-sheet aluminum with direct applied or silk-screened characters
F-Dem: Flat-sheet aluminum with demountable characters
Ext: Aluminum extrusions

Sheeting Type:
See Special Provisions Section 1007

Stringer Types:
P:Square-tube post
T:T-Section

Post Types:
2S-2" Single
2T-2" Telescoping
2 1/2S-2½" Single
2 1/2T-2½" Telescoping

	NAME	DATE
DESIGN	JKF	06/14
DRAWN	CPG	06/14
CHECKED	GPF	06/14

PARSONS BRINCKERHOFF

ARIZONA DEPARTMENT OF TRANSPORTATION
INTERMODAL TRANSPORTATION DIVISION

SIGN SUMMARY SHEET

ROUTE | LOCATION: PRESCOTT VALLEY PIPELINE & CENTRAL CORE MULTI-USE PATHS (CENTRAL CORE PHASE 3)

Registered Professional Engineer (Civil) CERTIFICATE NO. 49430 GREGORY PATRICK FLY ARIZONA U.S.A. Expires 3/31/2015

DWG NO. T4-2.02

TRACS NO. SL680 01C | TEA-PRV-0(205)T | ___ OF ___

$DATE$ 9/12/2014 I:\Prescott_MUP\SL694_ph3\Pvmk-Sign-MUT\SL694_ssum02.dgn

F.H.W.A. REGION	STATE	PROJECT NO.	SHEET NO.	TOTAL SHEETS	AS BUILT
9	ARIZ.	TEA-PRV-0(205)T			
		PRV 0000 YV			

Plan Sht No.	Sign Number	MOAS Sign Code	Work: New	Work: Existing: Replace Panel	Work: Existing: Relocate Panel	Work: Existing: Modify Legend	Work: Existing: Remove	Work: Existing: To Remain	Offset (ft)	Mounting Height (ft)	Background Color	Panel: Legend	Panel: Width (in.)	Panel: Height (in.)	Panel: Area (sq. ft.)	Panel: Type	Panel: Bid Item Number	Ground Mounted: Foundations	Ground Mounted: Posts: Type	Ground Mounted: Posts: Total length (ft)	Ground Mounted: New Slipbases	Ground Mounted: Stringer: Type	Ground Mounted: Stringer: Total Length (ft)	Overhead: Structure Type	Overhead: Number of Lights	Remarks
C4-2.07	1	R5-3	X							7	WH	NO MOTOR VEHICLES	24	24	4	RWM	6080005	1	2S	11						BACK TO BACK, SEE DETAIL V
	2	R1-2	X								WH	YIELD	18	15.6	1	RWM	6080005									TONOPAH DR, SEE PLANS FOR
																										SIGN REMOVAL
C4-2.07	3	W11-15	X							7	YL	TRAIL CROSSING	30	30	7	RWM	6080005	1	2S	11						SEE DETAIL V, TONOPAH DR
	4	W11-15P	X								YL	TRAIL CROSSING (PLAQUE)	24	12	2	RWM	6080005									
	5	W16-7P	X								YL	DOWNWARD DIRECTIONAL ARROW	24	12	2	RWM	6080005									
C4-2.07	6	R5-3	X							7	WH	NO MOTOR VEHICLES	24	24	4	RWM	6080005	1	2S	11						BACK TO BACK, SEE DETAIL V
	7	R1-2	X								WH	YIELD	18	15.6	1	RWM	6080005									TONOPAH DR, SEE PLANS FOR
																										SIGN REMOVAL
C4-2.07	8	W11-15	X							7	YL	TRAIL CROSSING	30	30	7	RWM	6080005	1	2S	11						SEE DETAIL V, TONOPAH DR
	9	W11-15P	X								YL	TRAIL CROSSING (PLAQUE)	24	12	2	RWM	6080005									
	10	W16-7P	X								YL	DOWNWARD DIRECTIONAL ARROW	24	12	2	RWM	6080005									
C4-2.07							X					EXST NO MOTORIZED VEHICLES	12	18	2		2020053									REMOVE SIGN AND POST
C4-2.08	1	R5-3	X							7	WH	NO MOTOR VEHICLES	24	24	4	RWM	6080005	1	2S	11						BACK TO BACK, SEE DETAIL V
	2	R1-2	X								WH	YIELD	18	15.6	1	RWM	6080005									SERPENTINE DR, SEE PLANS FOR
																										SIGN REMOVAL
C4-2.08	3	W11-15	X							7	YL	TRAIL CROSSING	30	30	7	RWM	6080005	1	2S	11						SEE DETAIL V, SERPENTINE DR
	4	W11-15P	X								YL	TRAIL CROSSING (PLAQUE)	24	12	2	RWM	6080005									
	5	W16-7P	X								YL	DOWNWARD DIRECTIONAL ARROW	24	12	2	RWM	6080005									
C4-2.08							X					EXST NO MOTORIZED VEHICLES	12	18	2		2020053									REMOVE SIGN AND POST

Notes:

1. The Engineer shall verify post lengths and elevations.
2. The Engineer may shift a sign in order to achieve a more desirable location.
3. Quantities are approximate and for the contractor's information only.

Panel Types:

RWM: Regulatory, Warning or Marker
F-DA: Flat-sheet aluminum with direct applied or silk-screened characters
F-Dem: Flat-sheet aluminum with demountable characters
Ext: Aluminum extrusions

Sheeting Type:
See Special Provisions Section 1007

Stringer Types:
P:Square-tube post
T:T-Section

Post Types:
2S-2" Single
2T-2" Telescoping
2 1/2S-2½" Single
2 1/2T-2½" Telescoping

	NAME	DATE
DESIGN	JKF	06/14
DRAWN	CPG	06/14
CHECKED	GPF	06/14

PARSONS BRINCKERHOFF

ARIZONA DEPARTMENT OF TRANSPORTATION
INTERMODAL TRANSPORTATION DIVISION

SIGN SUMMARY SHEET

ROUTE | LOCATION PRESCOTT VALLEY PIPELINE & CENTRAL CORE MULTI-USE PATHS (CENTRAL CORE PHASE 3)

Registered Professional Engineer (Civil) CERTIFICATE NO. 19450 GREGORY PATRICK FLY ARIZONA U.S.A. Expires 3/31/2015

DWG NO. T4-2.03

TRACS NO. SL680 01C | TEA-PRV-0(205)T | ___ OF ___

DATE | DESCRIPTION OF REVISION | MADE BY | NO.1 | NO.2

F.H.W.A. REGION	STATE	PROJECT NO.	SHEET NO.	TOTAL SHEETS	AS BUILT
9	ARIZ.	TEA-PRV-0(205)T			
		PRV 0000 YV			

TRAFFIC CONTROL GENERAL NOTES:

1. THE TRAFFIC CONTROL PLANS REPRESENT A SUGGESTED METHOD FOR TRAFFIC CONTROL DURING CONSTRUCTION. THE CONTRACTOR SHALL PREPARE TRAFFIC CONTROL PLANS IN ACCORDANCE WITH SECTION 701 OF THE SPECIFICATIONS. ALL TRAFFIC CONTROL PLANS ARE SUBJECT TO THE APPROVAL OF THE ENGINEER BEFORE BEGINNING CONSTRUCTION.
2. ADJUSTMENTS TO THE DETAILS PROVIDED OF THESE TRAFFIC CONTROL PLANS AND REQUIREMENTS MAY BE NECESSARY DUE TO CONSTRUCTION ACTIVITIES, AS DIRECTED BY THE ENGINEER.
3. THE CONTRACTOR SHALL MAINTAIN TWO-WAY TRAFFIC ON ALL STREETS AT ALL TIMES OR AS DIRECTED BY THE ENGINEER.
4. THE CONTRACTOR SHALL MAINTAIN ACCESS TO ALL LOCAL BUSINESSES.
5. THE CONTRACTOR SHALL MAINTAIN TRAFFIC ON A PAVED SURFACE AT ALL TIMES.
6. ALL EXISTING REGULATORY, WARNING AND MARKING SIGNS IN CONFLICT WITH THE TRAFFIC CONTROL SIGNS SHALL BE REMOVED, RELOCATED OR COVERED IN PLACE, AS DIRECTED BY THE ENGINEER. THE CONTRACTOR SHALL STORE AND REINSTALL ITEMS WHICH HAVE BEEN REMOVED OR RELOCATED IN A MANNER APPROVED BY THE ENGINEER AT NO ADDITIONAL COST TO THE DEPARTMENT.
7. SPEED LIMIT SIGNING IS PRELIMINARY AND IS SUBJECT TO REVIEW AND CHANGE BY THE ENGINEER AS DICTATED BY FIELD CONDITIONS.
8. USE DOUBLE FINES SIGNING WHEN WORKERS ARE PRESENT. SEE FIGURE SA-12 OF THE ADOT TRAFFIC CONTROL DESIGN GUIDELINES 2010.
9. THE RETROREFLECTIVE SHEETING ON ALL CONSTRUCTION SIGNS SHALL MEET THE MINIMUM CRITERIA ESTABLISHED IN SECTION 1007 OF THE SPECIFICATIONS.
10. ALL CONSTRUCTION SIGNS SHALL HAVE BLACK LETTERS ON AN ORANGE BACKGROUND.
11. CONSTRUCTION SIGNS SHALL NOT BE DISPLAYED TO TRAFFIC MORE THAN 24 HOURS PRIOR TO THE ACTUAL START OF CONSTRUCTION. THESE SIGNS MAY BE INSTALLED SOONER BUT THEY MUST BE COVERED OR TURNED AWAY FROM TRAFFIC. THE COST FOR COVERING OR TURNING THEM SHALL BE CONSIDERED PART OF THE SIGN INSTALLATION COST. NO FURTHER COMPENSATION WILL BE MADE. THESE SIGNS SHALL BE REMOVED WITHIN 24 HOURS AFTER COMPLETION OF THE CONSTRUCTION ACTIVITIES.
12. WHEN TRAFFIC CONTROL DEVICES ARE NOT IN USE, THEY SHALL BE MOVED AT LEAST 30 FEET FROM THE ROADWAY, IF POSSIBLE. OTHERWISE THEY SHALL BE COVERED OR TURNED AWAY FROM TRAFFIC.
13. DRUMS, TYPE II BARRICADES AND VERTICAL PANELS SHALL BE PLACED 20 FEET ON CENTER IN TAPERS AND 40 FEET ON CENTER IN TANGENTS.
14. THE CONTRACTOR MAY SUBSTITUTE TYPE I BARRICADES FOR TYPE II BARRICADES AS LONG AS THE REFLECTIVE AREA ON THE TOP PANEL OF THE TYPE I BARRICADE IS EQUIVALENT OR GREATER THAN THE REFLECTIVE AREA OF A TYPE II BARRICADE.
15. FOR TRAFFIC CONTROL LEFT IN PLACE OVER NIGHT, A TYPE C STEADY-BURNING YELLOW LIGHT SHALL BE MOUNTED ON EVERY DRUM, TYPE II BARRICADE, AND VERTICAL PANEL IN TAPERS; AND ON ALTERNATING DRUMS, TYPE II BARRICADES, ORVERTICAL PANELS IN TANGENTS.
16. DURING NIGHTTIME THE CONTRACTOR SHALL NOT UTILIZE CONES FOR CHANNELIZATION DEVICES UNLESS OTHERWISE DIRECTED BY THE ENGINEER.

DESIGN REFERENCES:

MUTCD - MANUAL ON UNIFORM TRAFFIC CONTROL DEVICES PART 6, TEMPORARY TRAFFIC CONTROL, 2009 EDITION AS AMENDED BY THE JANUARY, 2012 ADOT SUPPLEMENT.

TCDG - ADOT TRAFFIC CONTROL DESIGN GUIDELINES, 2010.

	NAME	DATE
DESIGN	JKF	06/14
DRAWN	CPG	06/14
CHECKED	GPF	06/14

PARSONS BRINCKERHOFF

ARIZONA DEPARTMENT OF TRANSPORTATION
INTERMODAL TRANSPORTATION DIVISION
ROADWAY DESIGN SECTION

TRAFFIC CONTROL
GENERAL NOTES

Registered Professional Engineer (Civil) CERTIFICATE NO. 49450 GREGORY PATRICK FLY ARIZONA U.S.A.
Expires 3/31/2015

ROUTE | LOCATION PRESCOTT VALLEY PIPELINE & CENTRAL CORE MULTI-USE PATHS (CENTRAL CORE PHASE 3)

DWG NO. T4-3.01

TRACS NO. SL680 01C | TEA-PRV-0(205)T | ____ OF ____

DATE- LOCATION- REVISIONS- FINISHED PLANS- SURVEY NO.

F.H.W.A. REGION	STATE	PROJECT NO.	SHEET NO.	TOTAL SHEETS	AS BUILT
9	ARIZ.	TEA-PRV-0(205)T			
		PRV 0000 YV			

APPROXIMATE TRAFFIC CONTROL QUANTITIES

ITEM NO.	BID ITEM DESCRIPTION	UNITS	CONSTRUCTION ACTIVITIES							
			PHASE 1	PHASE 2	PHASE 3A	PHASE 3B	PHASE 3C	PHASE 3D	PHASE 3E	TOTALS
	DURATION (CALENDAR DAYS)	DAYS	70	20	15	5	5	5	5	70
7016030	BARRICADE (VERTICAL PANELS, TYPE II)	EACH-DAY	0	0	1,500	250	250	250	125	2,375
7016032	PORTABLE SIGN STANDS (RIGID)	EACH-DAY	4,200	0	240	40	40	40	20	4,580
7016037	WARNING LIGHTS (TYPE C)	EACH-DAY	0	0	1,500	250	250	250	125	2,375
7016051	TEMPORARY SIGN (LESS THAN 10 S.F.)	EACH-DAY	4,200	0	240	40	40	40	20	4,580

	NAME	DATE
DESIGN	JKF	06/14
DRAWN	CPG	06/14
CHECKED	GPF	06/14

PARSONS BRINCKERHOFF

ARIZONA DEPARTMENT OF TRANSPORTATION
INTERMODAL TRANSPORTATION DIVISION
ROADWAY DESIGN SECTION

TRAFFIC CONTROL PLAN
APPROXIMATE QUANTITIES

Registered Professional Engineer (Civil) CERTIFICATE NO. 49430 GREGORY PATRICK FLY ARIZONA U.S.A.
Expires 3/31/2015

ROUTE | LOCATION PRESCOTT VALLEY PIPELINE & CENTRAL CORE MULTI-USE PATHS (CENTRAL CORE PHASE 3)

DWG NO. T4-3.03

TRACS NO. SL680 01C | TEA-PRV-0(205)T | ____ OF ____

DATE- | LOCATION- | REVISIONS- | FINISHED PLANS- | SURVEY NO.

F.H.W.A. REGION	STATE	PROJECT NO.	SHEET NO.	TOTAL SHEETS	AS BUILT
9	ARIZ.	TEA-PRV-0(205)T			
		PRV 0000 YV			

MAINTENANCE OF TRAFFIC

ACTIVITY NO	CONSTRUCTION ACTIVITY	TRAFFIC CONTROL	COMMENTS
1	PHASE 1 ESTABLISH WORK ZONE AT CROSSROADS ADVANCE SIGNING	OPERATION PER MUTCD TYPICAL APPLICATION 1 (TA-1). SETUP PER TA-1 IN EACH TRAVEL DIRECTION IN ADVANCE OF ROADWAY CROSSINGS AND WORK ZONES.	SIGNS ARE TO REMAIN IN PLACE FOR THE DURATION OF THE CENTRAL CORE PHASE 3 PROJECT.
2	PHASE 2 CONSTRUCT MULTI-USE PATH NOT ADJACENT TO EXISTING ROADWAYS	WORK PERFORMED IS NOT LOCATED NEAR EXISTING ROADWAYS. NO ADDITIONAL TRAFFIC CONTROL IS REQUIRED. TRAFFIC CONTROL FOR ACTIVITY 2 IS THE SAME AS PROVIDED UNDER ACTIVITY 1.	WORK SHALL BE COMPLETED FROM 7A TO 7P, MONDAY THRU FRIDAY ONLY. NO NIGHT WORK IS PERMITTED.
3	PHASE 3A CONSTRUCT MULTI-USE PATH INSTALL SIGNAGE ALONG LAKESHORE DR AT NAVAJO DR	OPERATION PER MUTCD TYPICAL APPLICATION 1 (TA-1) OR 6 (TA-6). SETUP PER TA-1 OR TA-6 IN EACH TRAVEL DIRECTION IN ADVANCE OF ROADWAY CROSSINGS AND WORK ZONES.	WORK SHALL BE COMPLETED FROM 7A TO 7P, MONDAY THRU FRIDAY ONLY. NO NIGHT WORK IS PERMITTED.
	PHASE 3B CONSTRUCT MULTI-USE PATH INSTALL SIGNAGE AT PAPAGO LN	OPERATION PER MUTCD TYPICAL APPLICATION 1 (TA-1) OR 6 (TA-6). SETUP PER TA-1 OR TA-6 IN EACH TRAVEL DIRECTION IN ADVANCE OF ROADWAY CROSSINGS AND WORK ZONES. PROVIDE TRAFFIC CONTROL ALONG LAKESHORE DR AT THE PAPAGO LN LOCATION.	WORK SHALL BE COMPLETED FROM 7A TO 7P, MONDAY THRU FRIDAY ONLY. NO NIGHT WORK IS PERMITTED.
	PHASE 3C CONSTRUCT MULTI-USE PATH INSTALL SIGNAGE AT SARATOGA LN	OPERATION PER MUTCD TYPICAL APPLICATION 1 (TA-1) OR 6 (TA-6). SETUP PER TA-1 OR TA-6 IN EACH TRAVEL DIRECTION IN ADVANCE OF ROADWAY CROSSINGS AND WORK ZONES. PROVIDE TRAFFIC CONTROL ALONG LAKESHORE DR AT THE SARATOGA LN LOCATION.	WORK SHALL BE COMPLETED FROM 7A TO 7P, MONDAY THRU FRIDAY ONLY. NO NIGHT WORK IS PERMITTED.
	PHASE 3D CONSTRUCT MULTI-USE PATH INSTALL SIGNAGE AT TONOPAH DR	OPERATION PER MUTCD TYPICAL APPLICATION 1 (TA-1) OR 6 (TA-6). SETUP PER TA-1 OR TA-6 IN EACH TRAVEL DIRECTION IN ADVANCE OF ROADWAY CROSSINGS AND WORK ZONES. PROVIDE TRAFFIC CONTROL ALONG LAKESHORE DR AT THE TONOPAH DR LOCATION.	WORK SHALL BE COMPLETED FROM 7A TO 7P, MONDAY THRU FRIDAY ONLY. NO NIGHT WORK IS PERMITTED.
	PHASE 3E CONSTRUCT MULTI-USE PATH INSTALL SIGNAGE AT SERPENTINE DR	OPERATION PER MUTCD TYPICAL APPLICATION 1 (TA-1) OR 6 (TA-6). SETUP PER TA-1 OR TA-6 IN EACH TRAVEL DIRECTION IN ADVANCE OF ROADWAY CROSSINGS AND WORK ZONES.	WORK SHALL BE COMPLETED FROM 7A TO 7P, MONDAY THRU FRIDAY ONLY. NO NIGHT WORK IS PERMITTED.

NOTE:

THE ORDER OF CONSTRUCTION ACTIVITIES DOES NOT CONSTITUTE A SEQUENCE OF CONSTRUCTION. THE CONTRACTOR SHALL PERFORM THE WORK IN THE MOST EXPEDITIOUS MANNER CONSISTENT WITH THE PLANS AND SPECIAL PROVISIONS WITH THE APPROVAL OF THE ENGINEER. ANY MODIFICATIONS TO THE ORDER OF CONSTRUCTION ACTIVITIES SHALL REQUIRE REVIEW AND APPROVAL BY THE ENGINEER.

	NAME	DATE
DESIGN	JKF	06/14
DRAWN	CPG	06/14
CHECKED	GPF	06/14

PARSONS BRINCKERHOFF

ARIZONA DEPARTMENT OF TRANSPORTATION
INTERMODAL TRANSPORTATION DIVISION
ROADWAY DESIGN SECTION

TRAFFIC CONTROL PLAN
MAINTENANCE OF TRAFFIC

Registered Professional Engineer (Civil) CERTIFICATE NO. 49430 GREGORY PATRICK FLY ARIZONA U.S.A. Expires 3/31/2015

ROUTE | LOCATION PRESCOTT VALLEY PIPELINE & CENTRAL CORE MULTI-USE PATHS (CENTRAL CORE PHASE 3)

DWG NO. T4-3.02

TRACS NO. SL680 01C | TEA-PRV-0(205)T | ____ OF ____

DATE- LOCATION- REVISIONS- FINISHED PLANS- SURVEY NO.

F.H.W.A. REGION	STATE	PROJECT NO.	SHEET NO.	TOTAL SHEETS	AS BUILT
9	ARIZ.	TEA-PRV-0(205)T			
		PRV 0000 YV			

PART 1 - To be completed by the Landscape Architect or Design Engineer

I. PROJECT DESCRIPTION

A. Owner Name and Address:

Arizona Department of Transportation
205 South 17th Avenue
Phoenix, Arizona 85007-3213

B. Project TRACS Number: SL680 01C

C. Project Location: Prescott Valley Central Core Phase 3

City: Prescott Valley County: Yavapai

Beginning Latitude (NAD 83): 34°36'25" N
Beginning Longitude (NAD 83): 112°18'33" W

Ending Latitude (NAD 83): 34°36'50" N
Ending Longitude (NAD 83): 112°17'41" W

To obtain the project latitude/longitude data, refer to the Flash Earth web link below (Bing Maps with labels): http://www.flashearth.com/

D. Project Description: New multi-use path construction and corresponding improvements.

II. HYDROLOGIC INFORMATION

A. Project Size:
Length (Mi.) 0.91
Area (Ac.) 2.20

B. Area to be Graded (Ac.) *: 0.47

* Blading of the shoulder build-up area is considered as grading and ground disturbance and should be covered by stormwater and/or other environmental regulations.

C. Percentage of the site that is impervious before and after construction:
Percentage before Construction: 0.9
Percentage after Construction: 0.9

D. Receiving Water(s), refer to the Arizona Department of Water Resources Web Link below (USGS Topo) : https://glsweb.azwater.gov/WellRegistry/Default.aspx

Agua Fria River

III. PRESERVATION OF EXISTING VEGETATION

A. In accordance with the specifications, existing vegetation will be preserved. Clearing limits shall be confined to areas that require grading. Existing vegetation outside the boundaries of the cleared area shall be protected from damage by construction activities. Existing trees within the area to be cleared shall be preserved and protected, wherever possible.

IV. SOIL STABILIZATION MEASURES

A. All disturbed soil, which will not be paved, riprapped or otherwise covered to prevent erosion, will be revegetated and/or landscaped in accordance with the project plans and specifications.

B. Scheduling of the revegetation effort can be found on PART 2 of this sheet under SCHEDULE OF MAJOR ACTIVITIES.

V. MEASURES TO CONTROL EROSION AND SEDIMENT

A. Temporary Erosion and Sediment Controls: (Refer to the Following SWPPP Site Plan and Specifications)

- ___ Erosion Control Mattings
- ___ Temporary Diversion Dikes
- ___ Check Dams
- ___ Rock Inlet/Outlet Protection
- ___ Sediment Control Berms
- ___ Silt Fences
- X Wattles (Excelsior/Straw)
- ___ Excelsior Logs / Sediment Logs
- ___ Seeding (Class II with mulch)
- ___ Others Describe:

B. Permanent Erosion and Sediment Controls and Post-construction Storm Water Management Measures: (Refer to SWPPP Site Plan and Specifications)

- ___ Crown Ditch/Dike
- ___ Rock Protection
- ___ Rock Riprap Channel Lining
- ___ Sediment Basin
- ___ Embankment Curb
- ___ Spillways and Downdrains
- ___ Minibenching
- X Seeding established as a perennial vegetative cover with a density of 70% of the native background vegetative cover.
- ___ Others Describe:

VI. MAINTENANCE AND INSPECTIONS

A. Frequency of Inspections:

___ At least once every 7 calendar days, OR
X Every 14 calendar days and within 24 hours after a rainfall of 0.5 inches (12.7 mm) or more.

NOTE: RAINFALL GAUGE TO BE KEPT ON-SITE TO DETERMINE DEPTH OF RAINFALL

B. Inspection Procedure:

ADOT's Contractor's Inspection Log and Compliance Evaluation Report (CER) will be completed by the contractor or his representative and will be kept on file for 3 years. A signed copy of the CER will be sent to the ADOT resident engineer. If repairs are necessary, they shall be initiated within 24 hours of the inspection report.

PART 2 - To be completed by ADOT & CONTRACTOR

http://www.azdot.gov/Inside_adot/OES/Water_Quality/Stormwater/Docs/swppp_construction_template.dot

I. SCHEDULE OF MAJOR ACTIVITIES

A. Project Schedule:

Start Date:

End Date:

B. Construction Sequencing Schedule: (Attach Additional Sheets)
Construction Activities

II. INVENTORY OF POLLUTANTS

A. The materials or substances checked below are expected to be onsite during construction:

- ___ Concrete
- ___ Asphalt
- ___ Paints
- ___ Fertilizer
- ___ Herbicides
- ___ Wood
- ___ Fuel
- ___ Oil
- ___ Others, List:

III. POLLUTION CONTROL MEASURES

A. Other Best Management Practices:

- ___ Wind Erosion and Dust Control
- ___ Solid Waste Management
- ___ Equipment Maintenance Procedures
- ___ Designated Washout Areas
- ___ Stabilized Construction Entrance
- ___ Protected Chemical and Material Storage Area
- ___ Other, Describe:

IV. SPILL PREVENTION AND RESPONSE

A. Spill Prevention:
The procedures outlined in the Best Management Practices listed under Pollution Control Measures will be followed to prevent and contain spills of hazardous material. These preventative action include BMP's on equipment maintenance and proper handling, storage and disposal of chemicals and materials. All manufacturer's recommendations for usage, clean-up and disposal shall be followed.

B. Spill Response:
In the event of any accidental spill of chemicals or hazardous materials, contact the ADOT Traffic Operations Center at 800-379-3701. If a reportable quantity is discharged into the storm water, ADOT shall contact the National Response Center and document the spill to the EPA. ADOT's Hazardous Materials Specialist shall provide instructions.

V. CERTIFICATION OF COMPLIANCE WITH FEDERAL, STATE AND LOCAL REGULATIONS

A. This Storm Water Pollution Prevention Plan (SWPPP) has been prepared in accordance with the latest updated version of ADOT's EROSION AND POLLUTION CONTROL MANUAL FOR HIGHWAY DESIGN AND CONSTRUCTION, published by ADOT Intermodal Transportation Division.

___ SWPPP is in compliance with other Federal, State Laws, or Local Regulations.

VI. POLLUTION PREVENTION PLAN CERTIFICATION

A. I certify under penalty of law that I have personally examined and am familiar with the information submitted in this application and all attachments and that, based on my inquiry of those persons immediately responsible for obtaining the information contained in the application, I believe that the information is true, accurate and complete. I am aware that there are significant penalties for submitting false information, including the possibility of fine and imprisonment. (Applies to VI. B., C., and D)

B. The operator/contractor as defined in AZPDES should sign the SWPPP in accordance with CGP Part VIII. J, and retain the SWPPP on-site at the construction site or other location easily accessible during normal business hours.

Signature: (operator/contractor)
Date:
Name:
Title:
Company:

C. ADOT Resident Engineer

Signature: (owner)
Date:
Name:
Title:
ADOT District:

D. MUNICIPALITY for Municipal Separate Storm Sewer System (MS4)

Signature:
Date:
Name:
Title:
MS4 Name:

VII. OTHER REQUIREMENTS

A. A copy of the General Permit and NOI are attached in accordance to AZPDES General Permit for Storm Water Discharges From Construction Activities To The Water Of The United States.

B. Projects that are within ¼ mile of impaired or unique waters require the SWPPP to be sent to ADEQ in combination with the NOI. Refer to the Arizona Outstanding, Impaired and Not-Attaining Waters *.PDF Maps by County web link: https://www.azdot.gov/Inside_adot/OES/Water_Quality/Stormwater/outstanding_unique_waters_maps_by_county.asp

C. For further requirements, check the ADEQ's Smart NOI Web Page: https://az.gov/app/smartnoi/

	NAME	DATE
DESIGN	JKF	06/14
DRAWN	CPG	06/14
CHECKED	GPF	06/14

PARSONS BRINCKERHOFF

ARIZONA DEPARTMENT OF TRANSPORTATION
INTERMODAL TRANSPORTATION DIVISION
ROADWAY DESIGN SECTION

AZPDES SWPPP INDEX SHEET

Registered Professional Engineer (Civil) CERTIFICATE NO. 49430 GREGORY PATRICK FLY ARIZONA U.S.A. Expires 3/31/2015

ROUTE | LOCATION PRESCOTT VALLEY PIPELINE & CENTRAL CORE MULTI-USE PATHS (CENTRAL CORE PHASE 3)

DWG NO. E4-1.01

TRACS NO. SL680 01C | TEA-PRV-0(205)T | ___ OF ___

DATE- LOCATION- REVISIONS- FINISHED PLANS- SURVEY NO.

F.H.W.A. REGION	STATE	PROJECT NO.	SHEET NO.	TOTAL SHEETS	AS BUILT
9	ARIZ.	TEA-PRV-0(205)T			
		PRV 0000 YV			

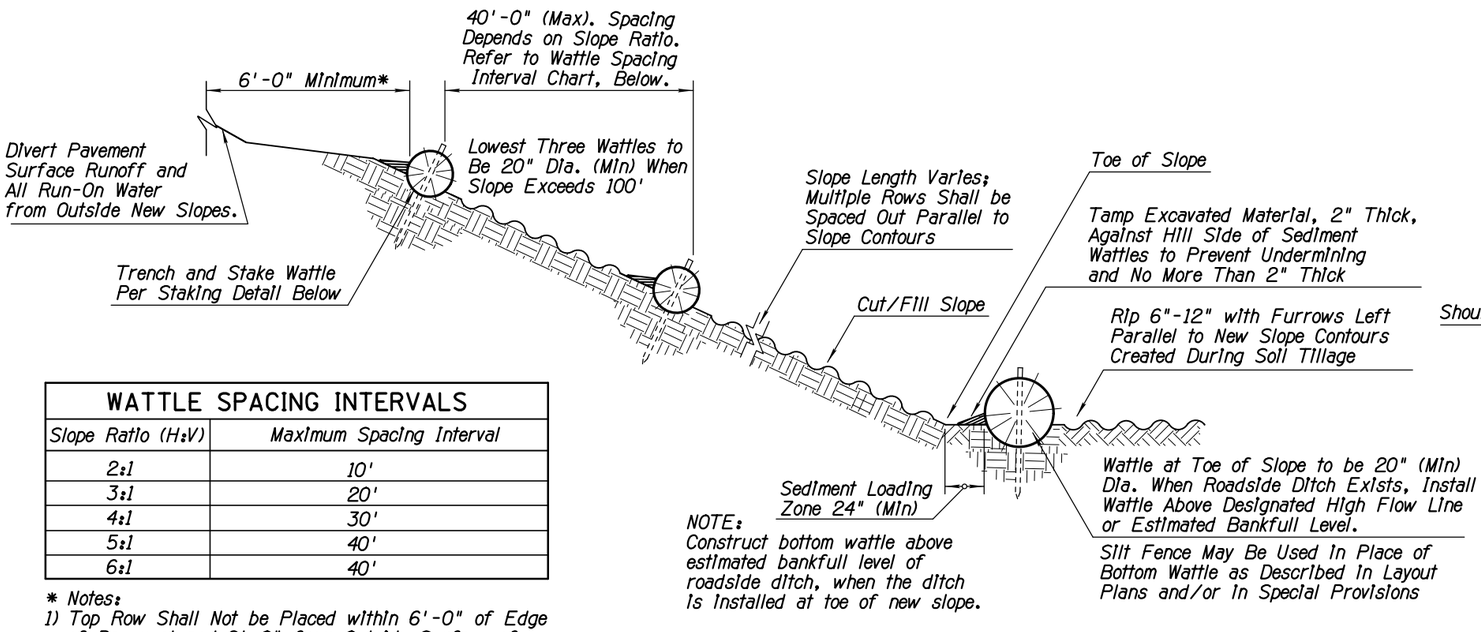

NOTE:
Construct bottom wattle above estimated bankfull level of roadside ditch, when the ditch is installed at toe of new slope.

SECTION (NTS)

WATTLE SPACING INTERVALS	
Slope Ratio (H:V)	Maximum Spacing Interval
2:1	10'
3:1	20'
4:1	30'
5:1	40'
6:1	40'

* Notes:
1) Top Row Shall Not be Placed within 6'-0" of Edge of Pavement and 9'-0" from Outside Surface of Barrier.
2) For erosive soils, place rows of wattles closer together.
3) For soils with low erosive potential, place rows of wattles further apart.

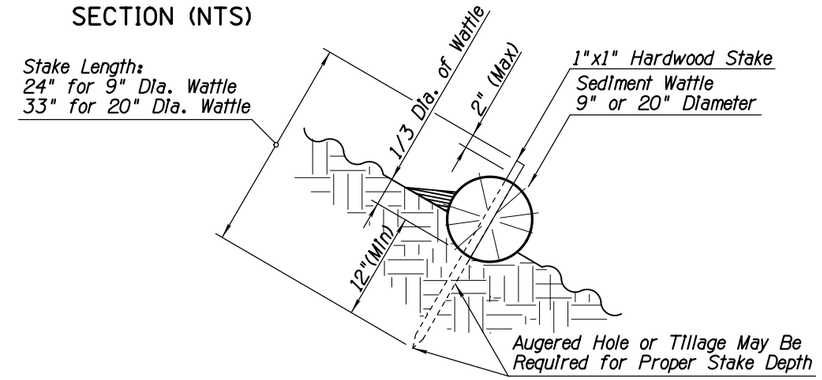

SEDIMENT WATTLE STAKING DETAIL (NTS)

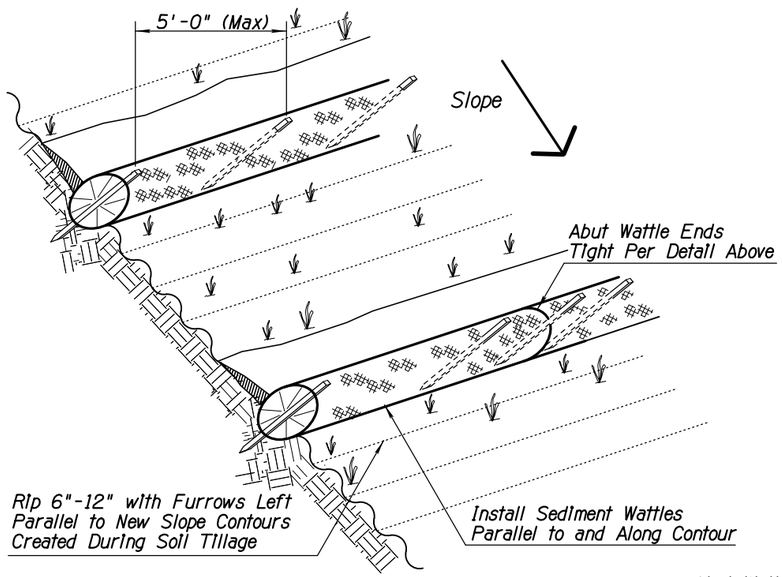

SEDIMENT WATTLE LAYOUT (NTS)

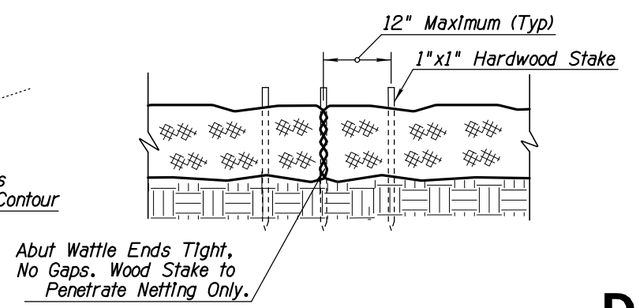

SEDIMENT WATTLE OVERLAP (NTS)

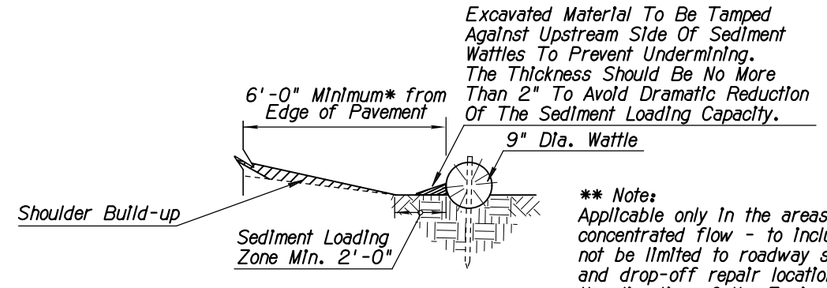

** Note:
Applicable only in the areas of concentrated flow - to include but not be limited to roadway sag spots and drop-off repair locations as per the direction of the Engineer.

NEW SHOULDER BUILDUP ** PROTECTION SECTION (NTS)

NOTES:

1. Install Sediment Wattles as slopes are constructed to grade or as directed by the Engineer. Select, Install and maintain in conformance with manufacturers' specifications to meet site conditions for slope protection and in accordance with good engineering practices. No Sediment Wattles shall be installed in urban freeway medians, nor where cable barrier systems are employed.
2. Sediment Wattles shall be in continuous contact with trench bottom and sides. Do not overlap wattle ends on top of each other. A 20" Dia. wattle may be made from 2-3 rolled excelsior or straw blankets.
3. Butt adjoining wattles tightly against each other. Drive the first end stake of the second wattle at an angle toward the first wattle to help abut them tightly.
4. Repair any rills or gullies promptly. Make field adjustments and corrections of Wattle BMP immediately if it is causing flooding, erosion, and/or affecting roadway safety.
5. Construction of cut slopes 2:1 and steeper in soil and rock materials that can be ripped shall be constructed, whenever possible, by Minibenching. Refer to Slope Minibenching BMP Detail.
6. Loosening surface soil is not required where Minibenches are used. For seeded areas, tillage shall be performed to form minor ridges and furrows parallel to new slope contours and as specified in Section 805 of the Standard Specifications and these special provisions.
7. Divert and direct run-on water from outside of the slopes to the spillways and/or rock riprap/rock mulch. Diversion dikes and/or ditches are necessary on natural undisturbed slopes beyond the top limits of new slopes to divert run-on water.
8. Installation and maintenance of Sediment Wattle BMPs shall not negatively impact traffic safety, nor the designed function of roadway or bridge drainage facilities.
9. Install and maintain Sediment Wattle BMPs to carry the stormwater of at least 2-year, 24-hour events.
10. The Sediment Wattle BMP's pay/bid item shall include all materials used for this BMP: all ground preparation, furnishing, installing, maintenance, final removal, and disposal of this temporary BMP, as well as returning the area to an acceptable condition as approved by the Engineer.
11. Refer to Standard Specification Section 810-2.06(C) for Sediment Wattle material specifications.
12. Make field adjustments and corrections to ensure NO sensitive biological resources (native species / habitats) will be adversely impacted.

DETAIL ES4
SEDIMENT WATTLE

	NAME	DATE
DESIGN	JKF	06/14
DRAWN	CPG	06/14
CHECKED	GPF	06/14

PARSONS BRINCKERHOFF

ARIZONA DEPARTMENT OF TRANSPORTATION
INTERMODAL TRANSPORTATION DIVISION
ROADWAY DESIGN SECTION

STORMWATER QUALITY PROTECTION & EROSION/SEDIMENT CONTROL DETAILS

ROUTE | LOCATION: PRESCOTT VALLEY PIPELINE & CENTRAL CORE MULTI-USE PATHS (CENTRAL CORE PHASE 3)

Registered Professional Engineer (Civil) CERTIFICATE NO. 49430 GREGORY PATRICK FLY ARIZONA U.S.A. Expires 3/31/2015

DWG NO. E4-1.02

TRACS NO. SL680 01C | TEA-PRV-0(205)T | ____ OF ____

DATE- LOCATION- REVISIONS- FINISHED PLANS- SURVEY NO.

F.H.W.A. REGION	STATE	PROJECT NO.	SHEET NO.	TOTAL SHEETS	AS BUILT
9	ARIZ.	TEA-PRV-0(205)T			
		PRV 0000 YV			

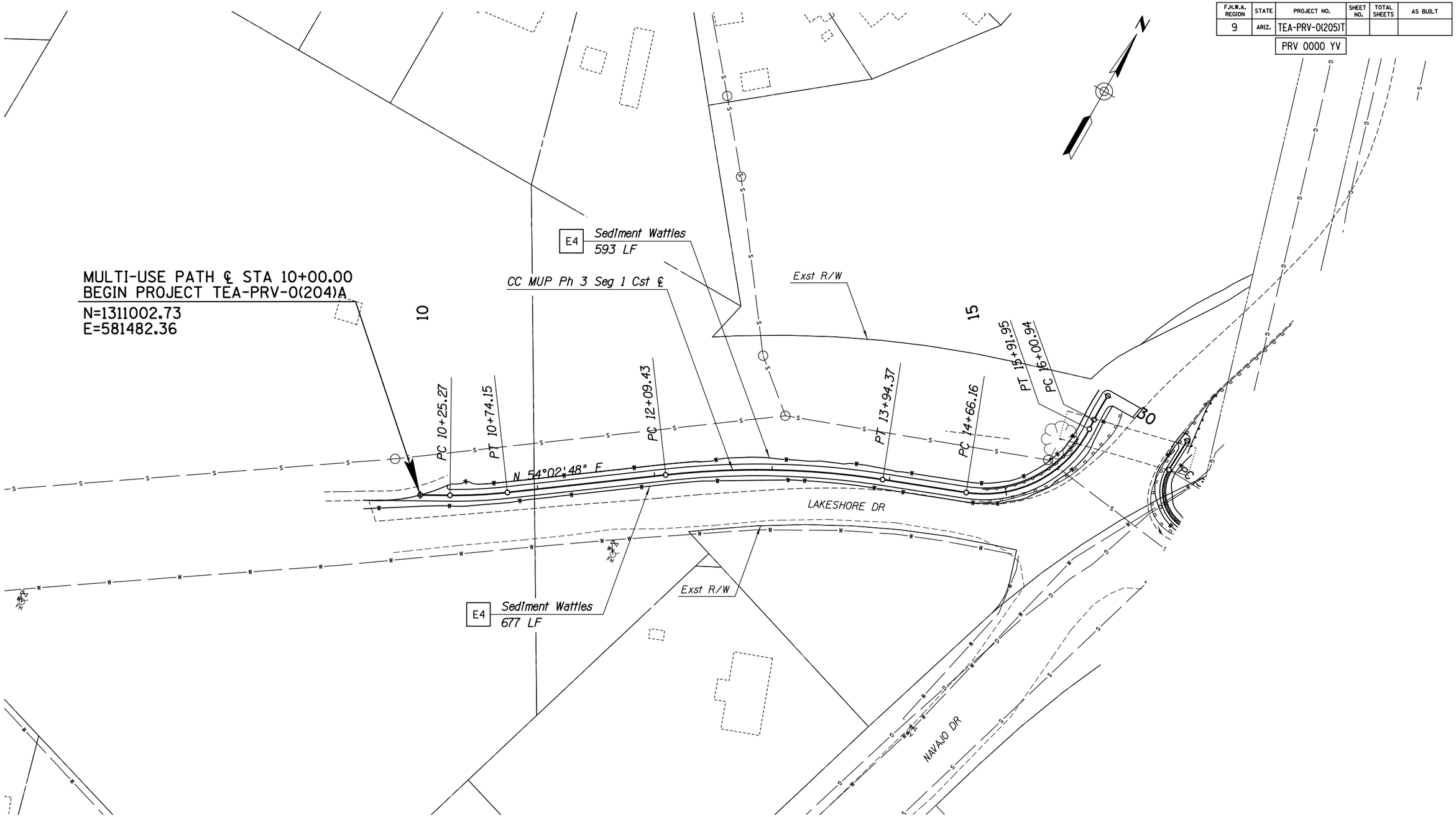

LEGEND:

Sediment Wattle

	NAME	DATE
DESIGN	JKF	06/14
DRAWN	CPG	06/14
CHECKED	GPF	06/14

PARSONS BRINCKERHOFF

ARIZONA DEPARTMENT OF TRANSPORTATION
INTERMODAL TRANSPORTATION DIVISION
ROADWAY DESIGN SECTION

EROSION CONTROL PLAN
Sta 10+00 to Sta 16+24.26

ROUTE | LOCATION PRESCOTT VALLEY PIPELINE & CENTRAL CORE MULTI-USE PATHS (CENTRAL CORE PHASE 3)

Registered Professional Engineer (Civil) CERTIFICATE NO. 49450 GREGORY PATRICK FLY ARIZONA U.S.A.
Expires 3/31/2015

DWG NO. E4-2.01

TRACS NO. SL680 01C | TEA-PRV-0(205)T | ____ OF ____

9/12/2014 T:\Prescott_MUP\SL694_ph3\SWPPP\SL694-ec01.dgn

F.H.W.A. REGION	STATE	PROJECT NO.	SHEET NO.	TOTAL SHEETS	AS BUILT
9	ARIZ.	TEA-PRV-0(205)T			

PRV 0000 YV

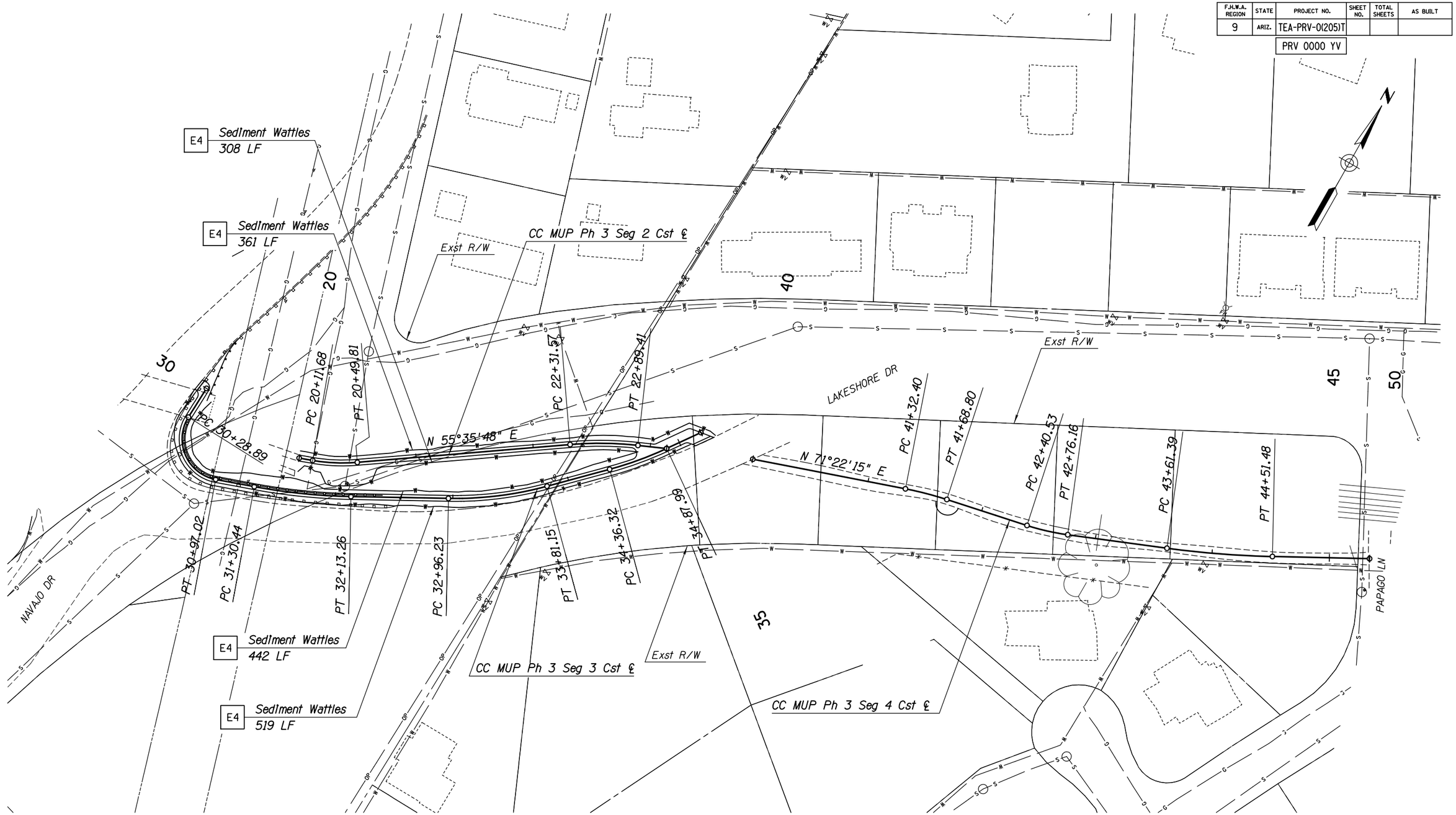

LEGEND:

Sediment Wattle

	NAME	DATE
DESIGN	JKF	06/14
DRAWN	CPG	06/14
CHECKED	GPF	06/14

PARSONS BRINCKERHOFF

ARIZONA DEPARTMENT OF TRANSPORTATION
INTERMODAL TRANSPORTATION DIVISION
ROADWAY DESIGN SECTION

EROSION CONTROL PLAN
Sta 20+00 to Sta 45+34.20

Registered Professional Engineer (Civil) CERTIFICATE NO. 49430 GREGORY PATRICK FLY ARIZONA U.S.A. Expires 3/31/2015

ROUTE

LOCATION PRESCOTT VALLEY PIPELINE & CENTRAL CORE MULTI-USE PATHS (CENTRAL CORE PHASE 3)

DWG NO. E4-2.02

TRACS NO. SL680 01C

TEA-PRV-0(205)T

___ OF ___

DATE- LOCATION- REVISIONS- FINISHED PLANS- SURVEY NO.

9/12/2014 T:\Prescott_MUP\SL694_ph3\SWPPP\SL694-ec02.dgn

F.H.W.A. REGION	STATE	PROJECT NO.	SHEET NO.	TOTAL SHEETS	AS BUILT
9	ARIZ.	TEA-PRV-0(205)T			
		PRV 0000 YV			

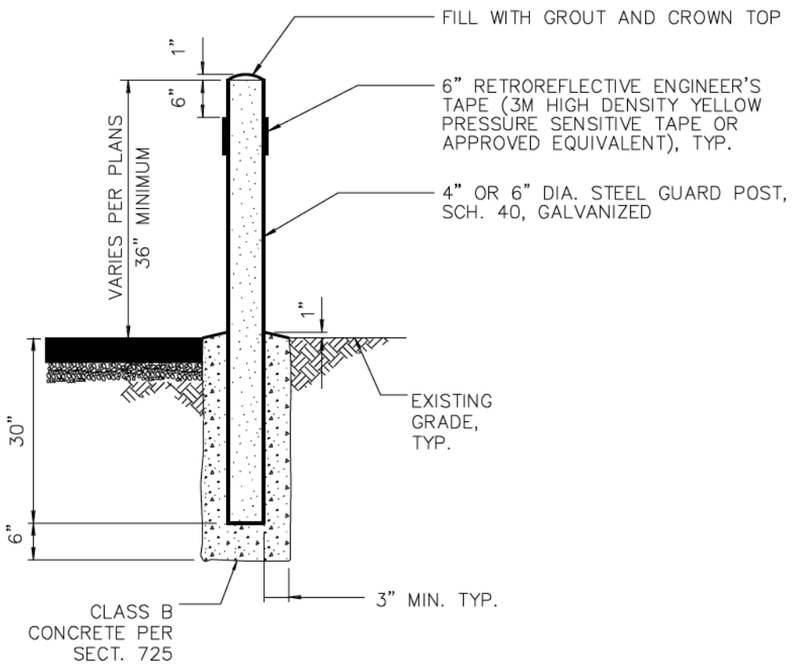

TYPE 1 PERMANENT

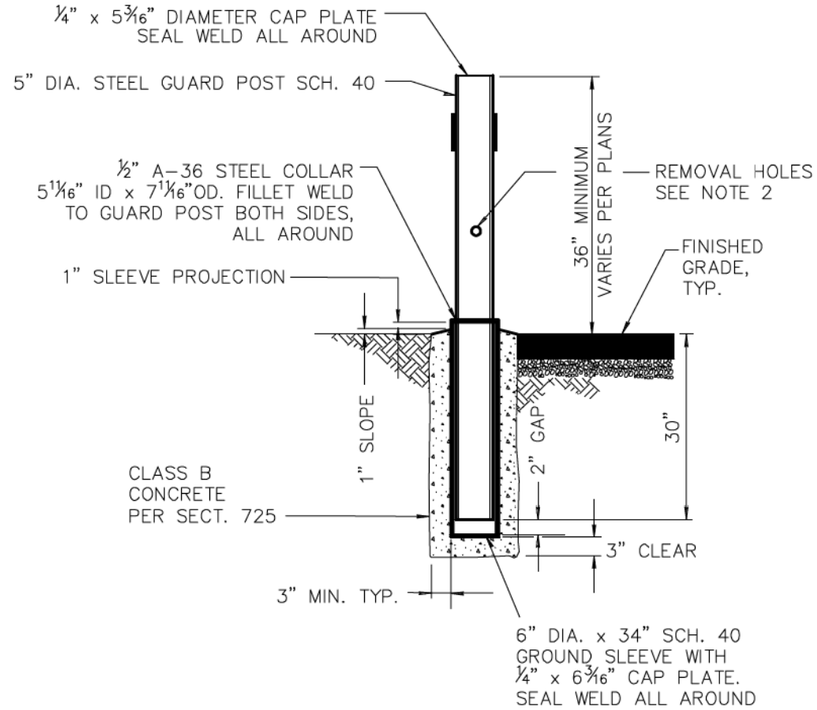

TYPE 2 REMOVABLE

NOTES

1. BOLLARDS SHALL HAVE A HEIGHT OF 3 FEET OR BE EQUAL TO THE HEIGHT OF THE BACK SCREEN WALL OF BIN ENCLOSURES. POSTS SHALL BE PLACED A MINIMUM OF 4" FROM THE WALL.
2. REMOVABLE POSTS SHALL HAVE 1" DIA. HOLES DRILLED THROUGH AT A DISTANCE ⅓ THE OVERALL POST LENGTH FROM TOP.
3. REMOVABLE POST – GRIND SMOOTH ALL SHARP EDGES PRIOR TO GALVANIZATION. GALVANIZE PER ASTM A54 AFTER FABRICATION.

DETAIL NO.			REVISED	DETAIL NO.
140	MARICOPA ASSOCIATION of GOVERNMENTS STANDARD DETAIL ENGLISH	BOLLARD	01-01-2009	140

	NAME	DATE
DESIGN	SMG	06/14
DRAWN	CPG	06/14
CHECKED	GPF	06/14

PARSONS BRINCKERHOFF

ARIZONA DEPARTMENT OF TRANSPORTATION
INTERMODAL TRANSPORTATION DIVISION
ROADWAY DESIGN SECTION

MAG STD DET 140

ROUTE | LOCATION PRESCOTT VALLEY PIPELINE & CENTRAL CORE MULTI-USE PATHS

DWG NO. M-1.01

TRACS NO. SL680 01C | TEA-PRV-0(205)T | ___ OF ___

9/12/2014 T:\Prescott_MUP\MAG Details\SL680_MAG140.dgn

DATE- LOCATION- REVISIONS- FINISHED PLANS- SURVEY NO.

F.H.W.A. REGION	STATE	PROJECT NO.	SHEET NO.	TOTAL SHEETS	AS BUILT
9	ARIZ.	TEA-PRV-0(205)T			
		PRV 0000 YV			

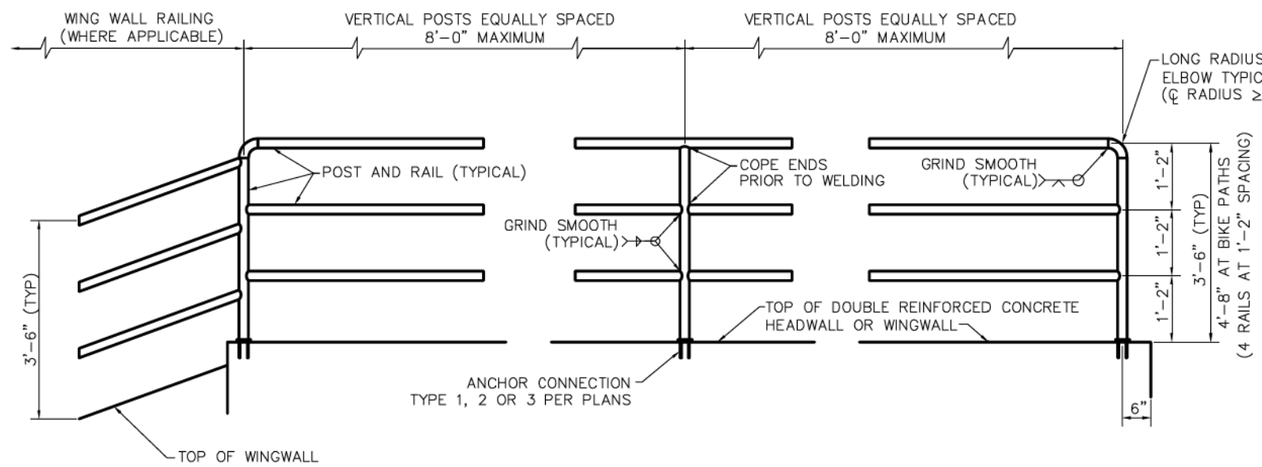

ELEVATION

NOTES:

1. POSTS AND RAILS SHALL BE 1.5" SCHEDULE 40 HOT-DIPPED GALVANIZED STEEL PIPE ASTM A 53, GRADE B (2.72 #/LF, 1.9" O.D.). GALVANIZING SHALL BE IN ACCORDANCE WITH SECTION 771.
2. PAINT RAIL PER MAG SPECIFICATIONS SECTION 530 WHEN REQUIRED BY PLANS. SHOP PRIME WITH RUST INHIBITING PRIMER (FIELD REPAIR PRIMER AS NEEDED). COLOR PER PLANS.
3. VERTICAL POSTS TO BE EVENLY SPACED.
4. REMOVE ALL SHARP EDGES.
5. INSTALL SAFETY RAIL AS REQUIRED BY PLANS OR SPECIFICATIONS.
6. THE EMBEDMENT FOR ANCHOR TYPES 1, 2 AND 3 SHALL BE LOCATED INSIDE THE WALL REINFORCEMENT CAGE.
7. SAFETY RAIL IS NOT TO BE USED AS A PEDESTRIAN BRIDGE RAIL.

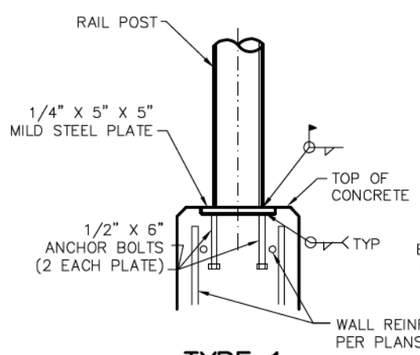

TYPE 1
ANCHOR PLATE DETAIL

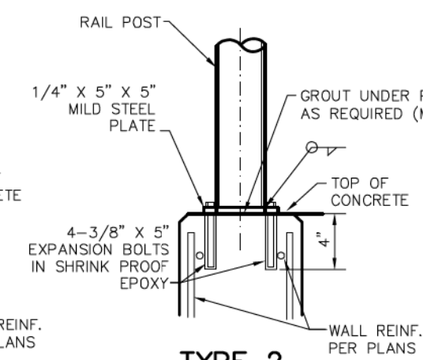

TYPE 2
EXPANSION BOLT DETAIL

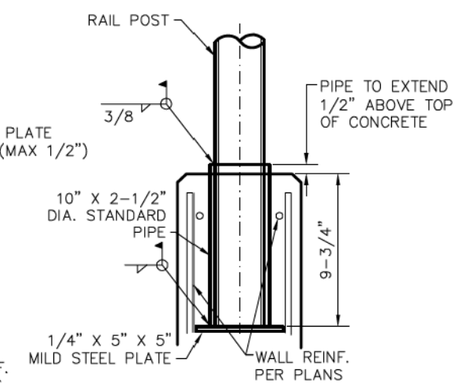

TYPE 3
PIPE SLEEVE DETAIL

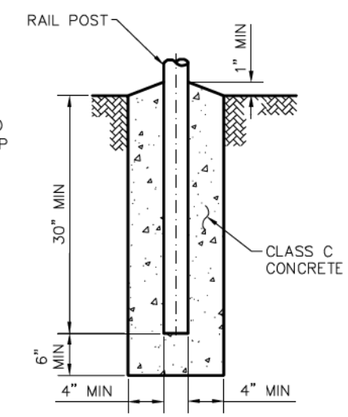

TYPE 4
GROUND INSTALLATION DETAIL

NOTE: SEE PLANS FOR ANCHORAGE DETAILS FOR ATTACHMENT TO SINGULARLY REINFORCED AND NON-REINFORCED WALLS.

DETAIL NO.			REVISED	DETAIL NO.
145	MARICOPA ASSOCIATION of GOVERNMENTS — STANDARD DETAIL ENGLISH	SAFETY RAIL	01-01-2011	145

	NAME	DATE
DESIGN	SMG	06/14
DRAWN	CPG	06/14
CHECKED	GPF	06/14

PARSONS BRINCKERHOFF

ARIZONA DEPARTMENT OF TRANSPORTATION
INTERMODAL TRANSPORTATION DIVISION
ROADWAY DESIGN SECTION

MAG STD DET 145

ROUTE | LOCATION: PRESCOTT VALLEY PIPELINE & CENTRAL CORE MULTI-USE PATHS

DWG NO. M-1.02

TRACS NO. SL680 01C | TEA-PRV-0(205)T | ___ OF ___

DATE- | LOCATION- | REVISIONS- | FINISHED PLANS- | SURVEY NO.

F.H.W.A. REGION	STATE	PROJECT NO.	SHEET NO.	TOTAL SHEETS	AS BUILT
9	ARIZ.	TEA-PRV-0(205)T			
		PRV 0000 YV			

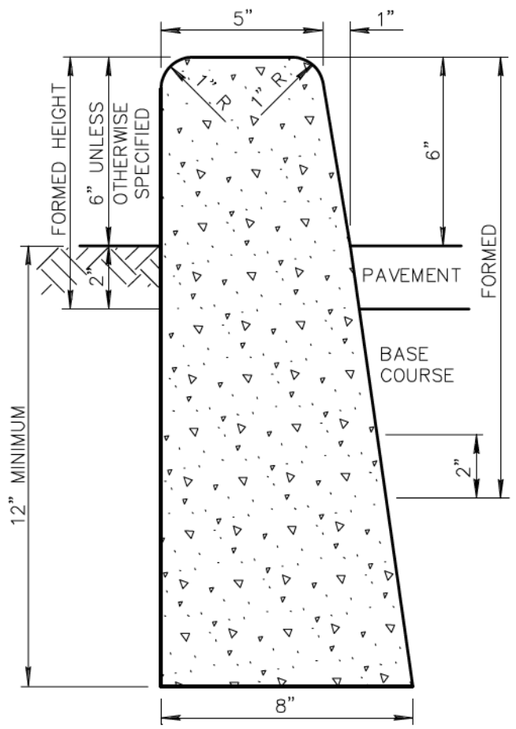

TYPE 'A'

NOTES:

1. ALL VERTICAL SURFACES TO BE FORMED.
2. VERTICAL SURFACES DOWN FROM 2" BELOW UNDISTURBED SOIL MAY BE PLACED AGAINST NEAT CUT IF APPROVED BY THE ENGINEER AND CONCRETE WILL NOT EXTEND MORE THAN 1" BEYOND THEORETICAL FACE.
3. ALL EXPOSED SURFACES TO BE STRIPPED GREEN AND TROWEL FINISHED.
4. CONCRETE CURBS CONFORM TO SECT. 340.
5. MAXIMUM SPACING OF CONTRACTION JOINTS IS 10'
6. CONCRETE TO BE CLASS 'B' PER SECT. 725.
7. WHEN PAVEMENT AND BASE COURSE EQUALS OR EXCEEDS 10" IN DEPTH, THE ENTIRE ROADWAY SIDE OF THE CURB SHALL BE FORMED. THE TOTAL CURB HEIGHT REMAINS 18" UNLESS NOTED OTHERWISE.

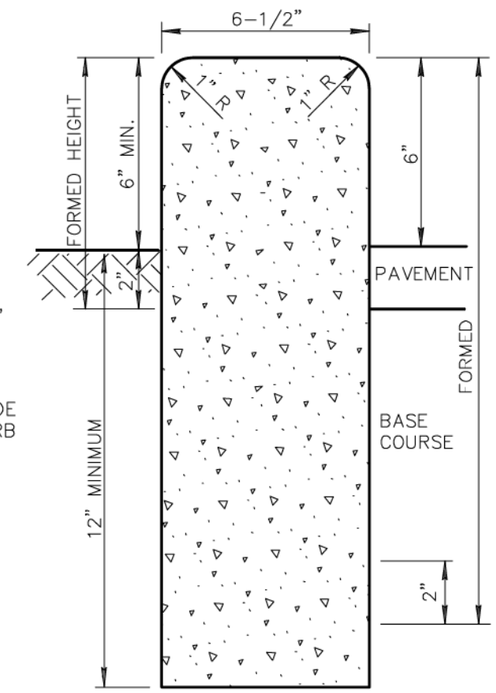

TYPE 'B'

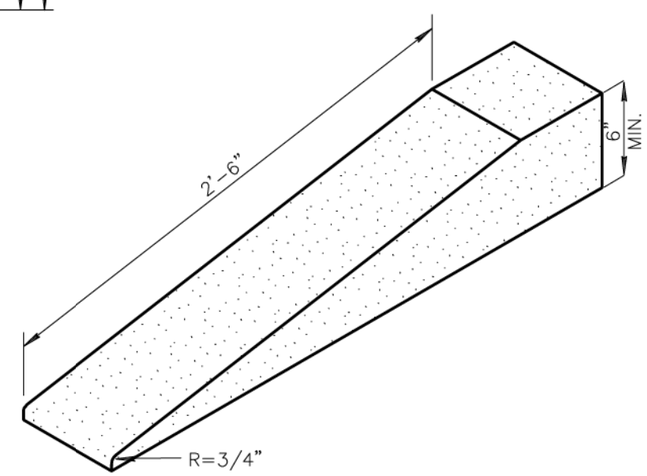

TYPICAL CURB TERMINATION

DETAIL NO.			REVISED	DETAIL NO.
222	MARICOPA ASSOCIATION of GOVERNMENTS — STANDARD DETAIL ENGLISH	SINGLE CURB – TYPES A, B AND TERMINATION	01-01-2008	222

	NAME	DATE	
DESIGN	SMG	06/14	ARIZONA DEPARTMENT OF TRANSPORTATION INTERMODAL TRANSPORTATION DIVISION ROADWAY DESIGN SECTION
DRAWN	CPG	06/14	
CHECKED	GPF	06/14	
PARSONS BRINCKERHOFF			MAG STD DET 222
ROUTE	LOCATION		PRESCOTT VALLEY PIPELINE & CENTRAL CORE MULTI-USE PATHS
TRACS NO. SL680 01C			TEA-PRV-0(205)T

DWG NO. M-1.03

____ OF ____

DATE- LOCATION- REVISIONS- FINISHED PLANS- SURVEY NO.

9/12/2014 T:\Prescott_MUP\MAG Details\SL680_MAG222.dgn