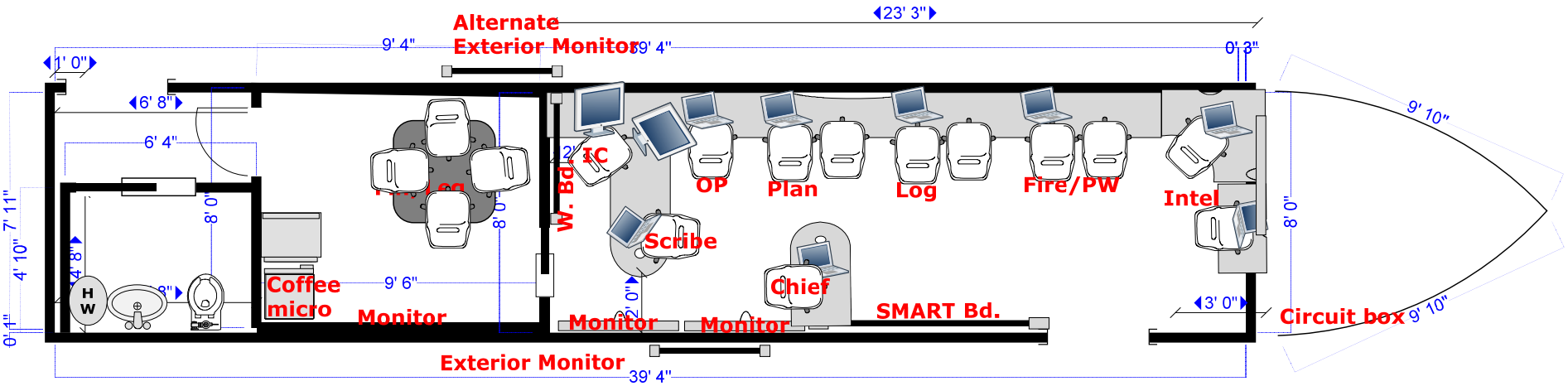

Alternate
Exterior Monitor
23' 3"
9' 4"
39' 4"
0' 3"
1' 0"
6' 8"
6' 4"
9' 10"
7' 11"
4' 10"
8' 0"
4' 8"
8"
H
W
Coffee
micro
Monitor
9' 6"
W. Bd.
IC
OP
Plan
Log
Fire/PW
Intel
Scribe
Chief
SMART Bd.
Monitor
Monitor
3' 0"
Circuit box
9' 10"
Exterior Monitor
39' 4"

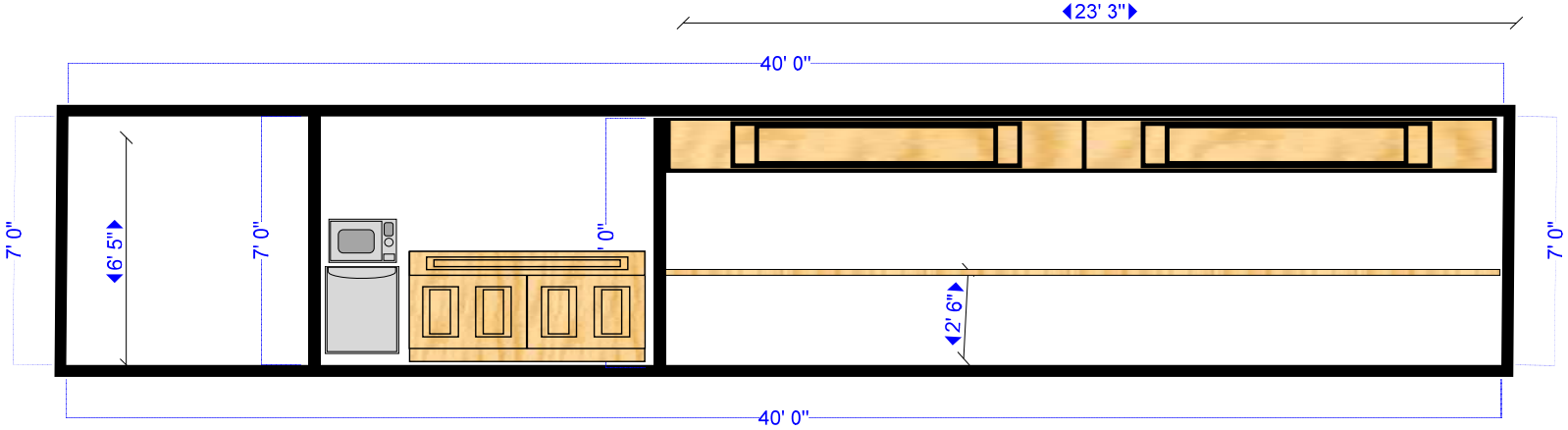

23' 3"
40' 0"
7' 0"
6' 5"
7' 0"
2' 6"
7' 0"
40' 0"